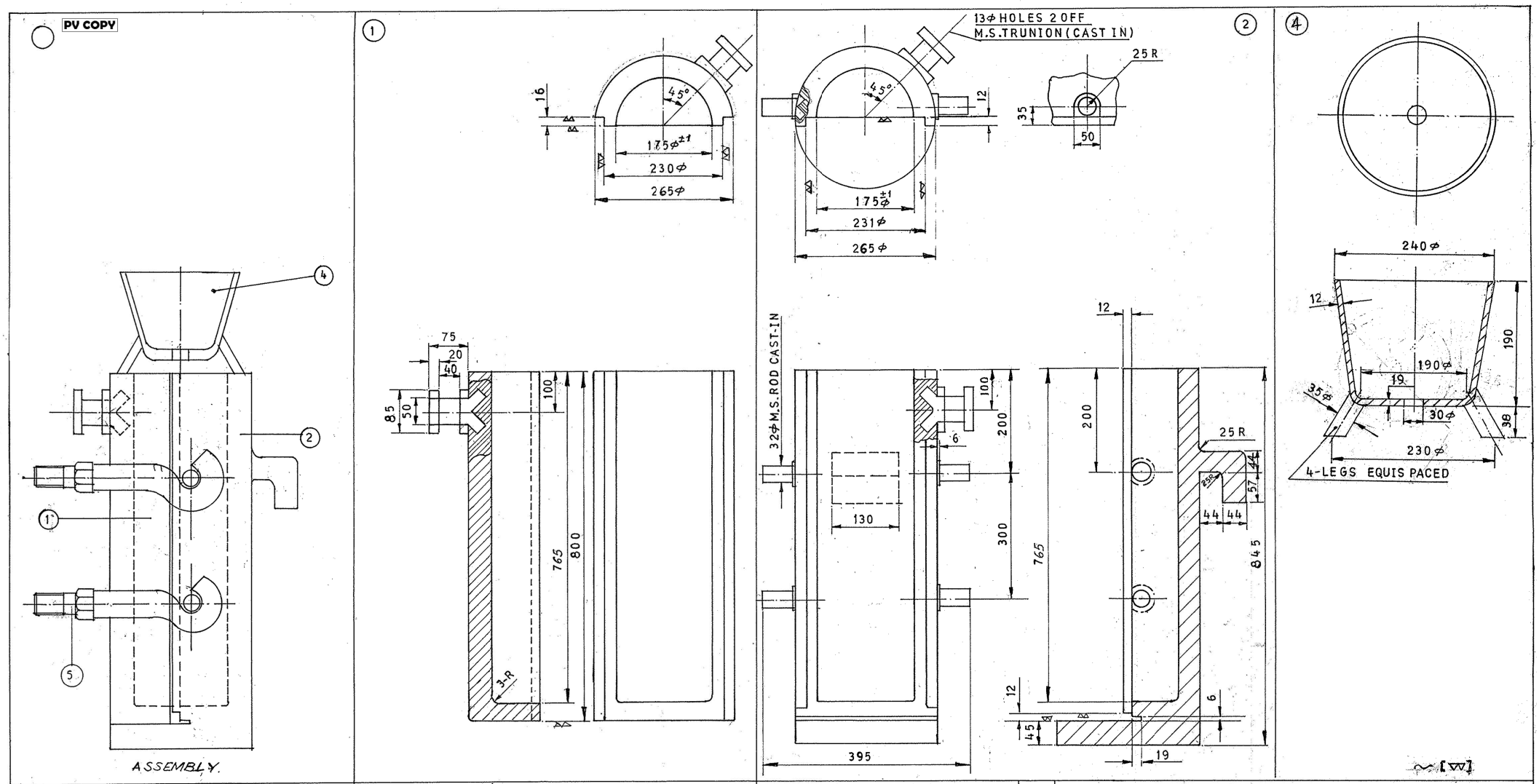

ITEM NO.	DESCRIPTION AND FINAL DIMENSIONS	NO. OFF	MATERIAL	HARDNESS	REMARKS
5	CLAMP WITH EYE BOLT	2	M.S.		
4	TUNDISH	1	~~GRAPHITE~~	CAST IRON	
2	MOULD FEMALE	1	C.I.		
1	MOULD MALE	1	C.I.		

INDEX	DESCRIPTION OF AMENDMENTS	DATE	NAME	ZONE
	ITEM (4) MATERIAL WILL BE CAST IRON INSTEAD OF GRAPHITE AUTH. MEMO NO. MP/MISC/24/107 DT. 12-9-09	12/9/09 JWM/DO		
	ITEM (1) & (2) DIMS 765 WAS 712, 265φ WAS 275φ	08-12-04		GM/PL
	ITEM (4) REPLACED BY MH-1011/111, AUTH. MEMO No. P/MP/5/30 dt 6.10.02	16.11.02		

C.I. INGOT MOULD FOR 175φ × 712 LENGTH BRASS INGOT (SPLIT TYPE) (MELTING PLATFORM)

Ref. Memo No. MSF/CT/21/ENG/18/99

SCALE 1:5 1:2

DRAWN 20.8.99
TRACED
CHECKED
APPROVED
J.W.M.D.O 24/8/99
W. MANAGER MR 25/8

CLEANING
ROUGHING
SMOOTHING
FINISHNG

METAL & STEEL FACTORY ISHAPORE

DRG. NO. M.P/121 R1

J.W.M/M.P