DRG. NO- CO-517

FOR GUIDE TO SUPPLY ONLY

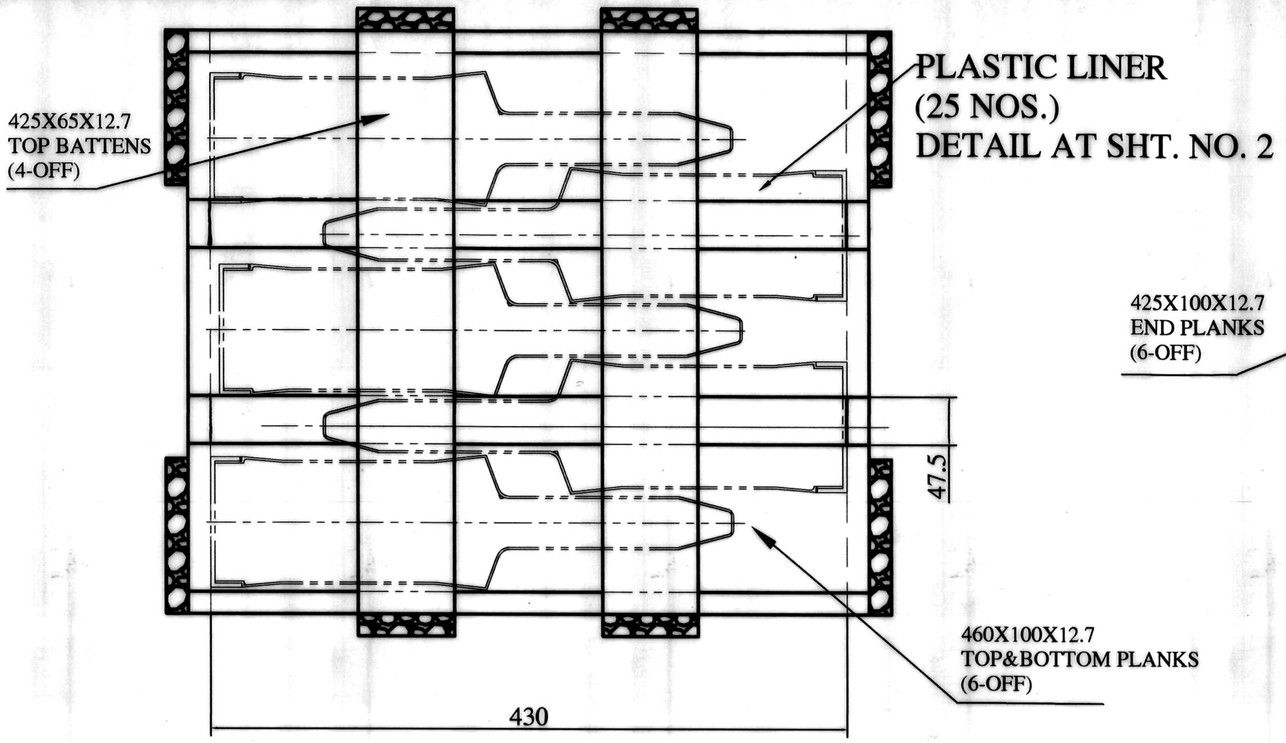

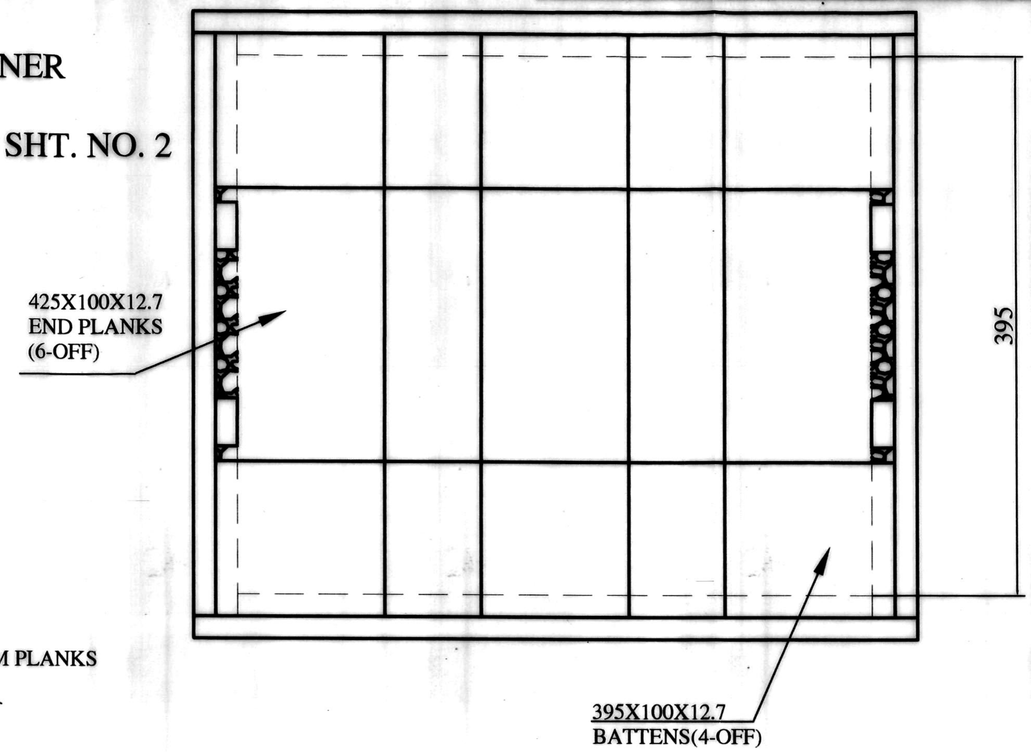

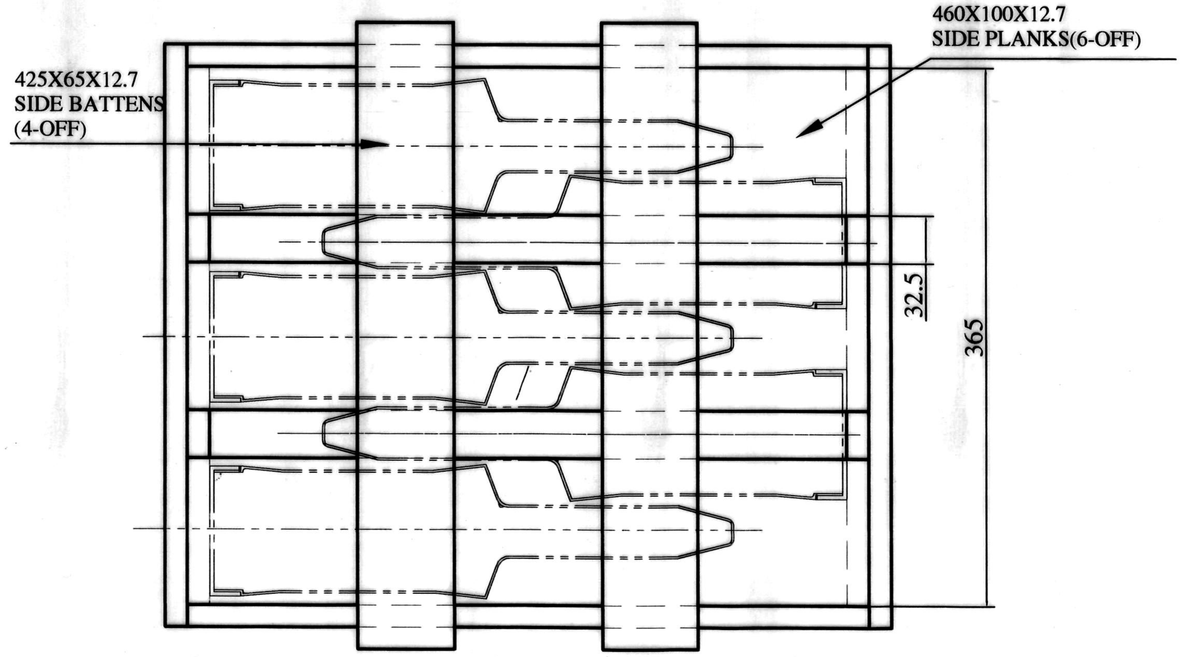

MATL:- PACKING WOOD MANGO

NOTE:- ALL WOODEN MEMBERS EXCEPT THE TOP SHOULD BE FIXED WITH SUITABLE NAILS. THE TOP SHOULD BE FIXED WITH SUITABLE WOOD SCREWS. MANGO THE TIMBER AS GIVEN IN SPRCN> IND/GS/754(K).

PRESERVATIVE TREATMENT:- AS PER SPECN - IND/GS/754(K)

CORRUGATED PAPER TO AVOID LOOSE PACKING MAY BE USED SUITABLY.

FOR GUIDE SUPPLY ONLY

		SCHEDULE NO :	COMPT:- 84 mm TPT PROJECTILE- EMPTY ASSY.	ST. DRG. NO
		SCALE :NTS / PROJECTION THIRD ANGLE		
		DRAWN BY : 31-05-16	WOODEN PACKING BOX WITH PLASTIC LINER	
		CHECKED BY : 31/05		
		APPROVED BY : 31/5/16	DRG. NO. :-CO-517	
DT. & SG.	DESCRIPTION	CONCURRED BY:	M / C :	NO.OF SHTS:2
AMENDMENTS	DATE : SIGN :	1.16	G. & S. FY. COSSIPORE	SHT. NO. : 1

DRAWN AS PER QC(MIN) MEMO NO. 107/058/QC(M)/S-2/2016 Dated: 20.05.2016

DRAWN AS PER QCUMAIN) MEMO NO- 107/058/ QCUM)/5-2/2016 Dated: 20-05-2016

DRG. NO-CO-517

FOR GUIDE TO SUPPLY ONLY

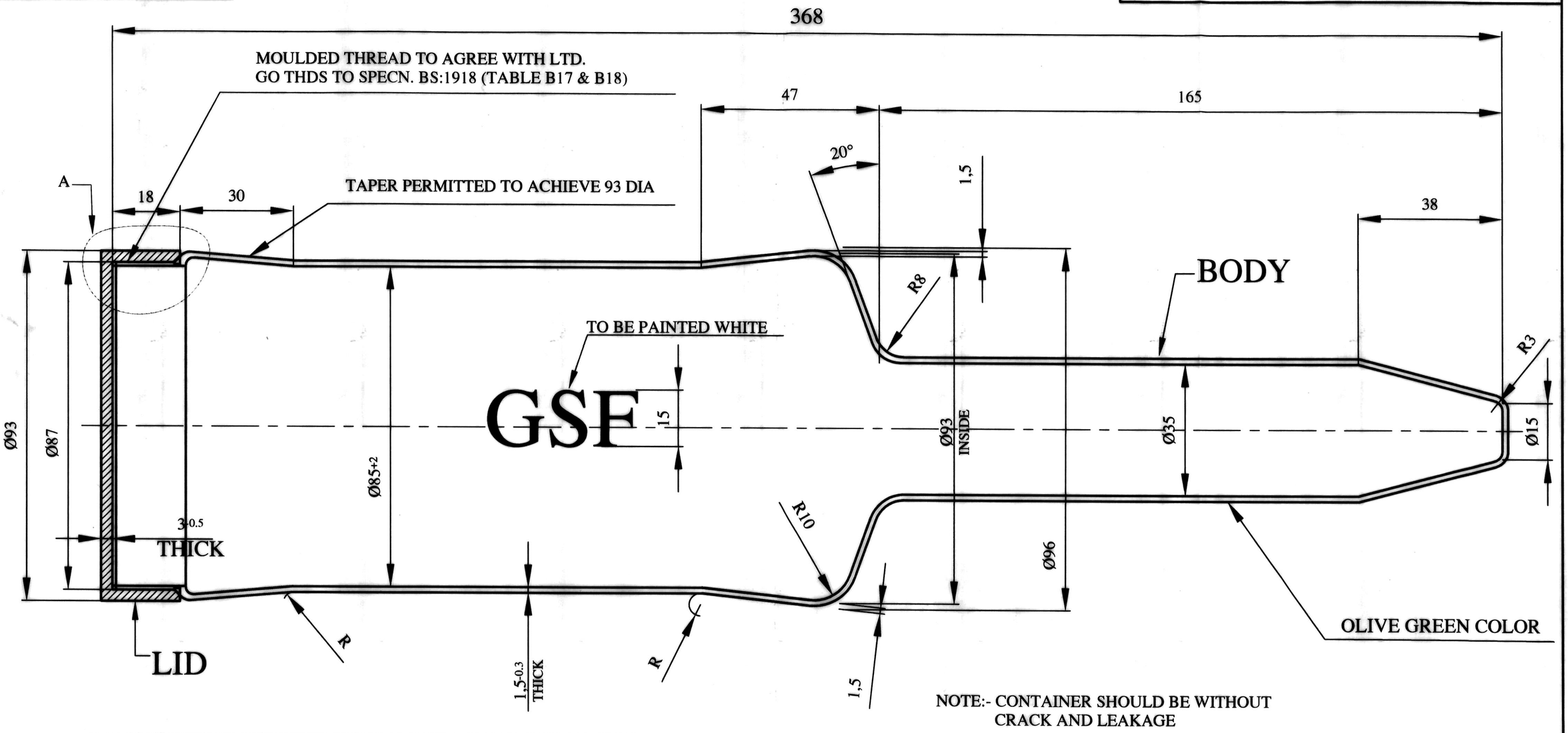

NOTE:- CONTAINER SHOULD BE WITHOUT CRACK AND LEAKAGE

MATL:- HIGH IMPACK POLYSTYRENE

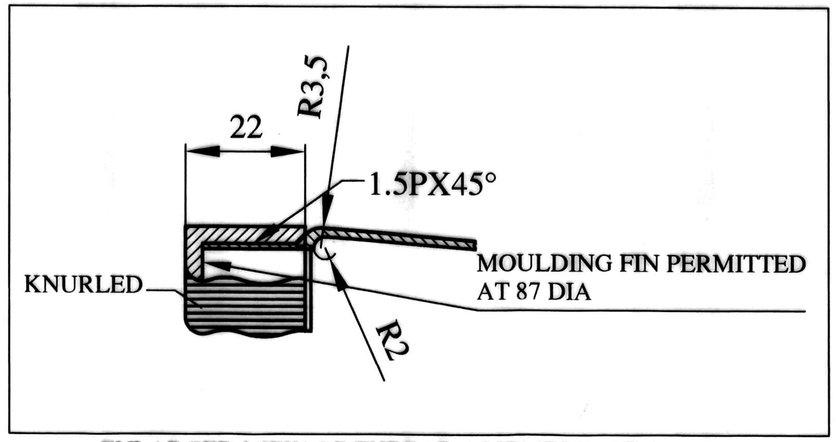

ENLARGED VIEW OF THREAD ASSEMBLY. AT A

		SCHEDULE NO :	COMPT:- 84 mm TPT PROJECTILE - EMPTY ASSY.	ST. DRG. NO
		SCALE :NTS / PROJECTION THIRD ANGLE		
		DRAWN BY : 31.05.16	WOODEN PACKING BOX WITH PLASTIC LINER	
		CHECKED BY : 31/05		
		APPROVED BY : 31/05/16	DRG. NO- CO-517	
DT. & SG.	DESCRIPTION	CONCURRED BY:	M / C :	NO.OF SHTS:2
AMENDMENTS	DATE :	SIGN :	G. & S. FY. COSSIPORE	SHT. NO. : 2