Инв. № подл. | Подпись и дата | Взам. инв. № | Инв. № дубл. | Подпись и дата

Справ N ТХП-ЯС-12-150 | Перв. примен

Поз. Pos.	Зона Zone	Позиция Pos.	PART. No. ОБОЗНАЧЕНИЕ	NOMENCLATURE. НАИМЕНОВАНИЕ	Кол. Unit. Total	Примечание REMARKS
				DOCUMENTATION. Документация		
24			БШ4.103.007 СБ	ASSEMBLY DRAWING. Сборочный чертеж	X X	

D.C.(1):-5504-I. SCH. SEALED		28.9.91
D.C.(1):-1330-I(P). SCH. PROV. SEALED.		7.8.89.
AMENDMENTS.	SIG.	DAT

Утвержд. Пит.

ДОСТОВЛЕНО С полнитника. Зерно
D.C.(1):-1330-I(P), 5504-I.

40815KD

ORIGINAL INVENTORY SIGNATURE	Alt	Sheet No	No. OF DOCUMENT	SIGNATURE	DATE
	DESIGNER				
	CHECKED BY				2/5/85
	CHEF OF DSN. DEPARTMENT				
	INSPECTOR				
	APPROVED				21/5/85

БШ4.103.007

F-2 / R-1

PACKING CASE

LETTER	SHEET	No. OF SHEET
	1	6

HEAVY VEHICLES FACTORY
AVADI

2.113-1

Формат SIZE	Зона ZONE	Поз. REF. NO	PART NO ОБОЗНАЧЕНИЕ	NOMENCLATURE НАИМЕНОВАНИЕ		USED ON: Кол. на исполн. БШ4.103.007 - 01	REMARKS Примечание
				ASSEMBLY UNITS. Сборочные единицы			
11		1	БШ6.103.007	Корпус HOUSING.	1	1	
11		2	БШ6.467.009	Петля LOOP	2	2	
				PARTS Детали			
2		6	БШ8.050.392	COVER BOTTOM Крышка-дно	2	2	
1		7	БШ8.070.075	Колодка BLOCK	1	1	

AMENDMENTS.	SIG.	DATE.
D.C.(1):-5504-I. SCH. SEALED.		28.9.91
D.C.(1):-1330-I (P). SCH. PROV. SEALED.		7.8.89.

408155 KD

ТХП-ЯС-7-80

Формат SIZE	Зона ZONE	Поз. REF. NO	PART. NO ОБОЗНАЧЕНИЕ	NOMENCLATURE НАИМЕНОВАНИЕ	USED ON. Кол. на исполн. БШ4.103.007 – 01		REMARKS Примечание
11	8		БШ8.070.078	Колодка BLOCK	1	1	
11	9		БШ8.070.079	Колодка BLOCK.	1	1	
11	10		БШ8.667.246	Скоба CLAMP	2	2	ТХП-ЯС-7-80
11	11		БШ8.667.249	Скоба CLAMP	1	1	
6/4	15		БШ8.685.646	Прокладка GASKET Войлок ТПр FELT T ПР ГОСТ 288-72 GOST 288-72 3×15×18	1	1	

D.C.(1):-1330-I(P), 5504-I.

D.C.(1):-5504-I. SCH. SEALED		28.9.91
D.C.(1):-1330-I(P). SCH. PROV. SEALED.		7.8.89.
AMENDMENTS.	SIG.	DATE.

1

40815 KD

Изм. Лист № докум. Подп. Дата

БШ4.103.007

F2 3

Лист 3 1

Ф. 2.113-1а

Формат 11

338-7

Формат SIZE	Зона ZONE	Поз. REF. NO	PART. NO ОБОЗНАЧЕНИЕ	NOMENCLATURE НАИМЕНОВАНИЕ	USED ON Код. на. исполн.	REMARKS Примечание
6/4	16		БШ8.685.647	GASKET Прокладка FELT T ПР Войлок Т Пр GOST ГОСТ 288-72 3x15x35	БШ4.103.007 - 01 1 1	
6/4	17		БШ8.685.648	GASKET Прокладка FELT T ПР Войлок Т Пр GOST ГОСТ 288-72 3x20x25	2 2	

D.C.(1):-1330-I(P), 5504-I.

D.C.(1):-5504-I. SCH. SEALED.		28.9.91
D.C.(1):-1330-I(P). SCH. PROV. SEALED.		7. 8. 89.
AMENDMENTS.	SIG.	DATE.

40815 KD

Изм. Лист № докум. Подп. Дата

БШ4.103.007

F-2

Лист 4

Формат SIZE	Зона ZONE	Поз. REF. NO	PART NO Обозначение	NOMENCLATURE Наименование	USED ON Кол. на исполн.	REMARKS Примечание
					БШ4.103.007 - 01	
6/4	18		БШ8.685.651	GASKET Прокладка FELT ТПР Войлок ТПр GOST ГОСТ 288-72 3×20×30	2	2
6/4	19		БШ8.685.650	GASKET Прокладка FELT ТПР Войлок ТПр GOST ГОСТ 288-72 3×25×50	1	1

D.C.(1):-5504-I. SCH. SEALED.		28.9.91
D.C.(1):-1330-I(P). SCH. PROV. SEALED.		7.8.89.
AMENDMENTS.	SIG.	DATE.

D.C.(1):-1330-I(P), 5504-I.

408154

БШ4.103.007

Изм. Лист № докум. Подп. Дата

Ф. 2 113-1б

Сформат 11

F.2. 5

SHEET ЛИСТ 5

335-7

SIZE / ZONE / REF. NO	PART. NO	NOMENCLATURE	USED ON	REMARKS
		STANDARD ARTICLES. Стандартные изделия	01 БШ4 103.007	Примечание
21	M28 59.316 СП	TABLE SCARF WITH KEY Замок натяжной	2.2	
22		ENVELOPE FOR Конверт для TECHNICAL DOCUMENTS техдокументации СТП БШ0.005027 AS PER по СТП БШ8.865.028		

D.C.(1):-1330-I(P),5504-I.

D.C.(1):-5504-I, SCH. SEALED		28.9.91
D.C.(1):-1330-I(P). SCH. PROV. SEALED.		7.8.89.
AMENDMENTS.	SIG.	DATE.

БШ4.103.007

40815KI

F-R 6

1 SHEET 6

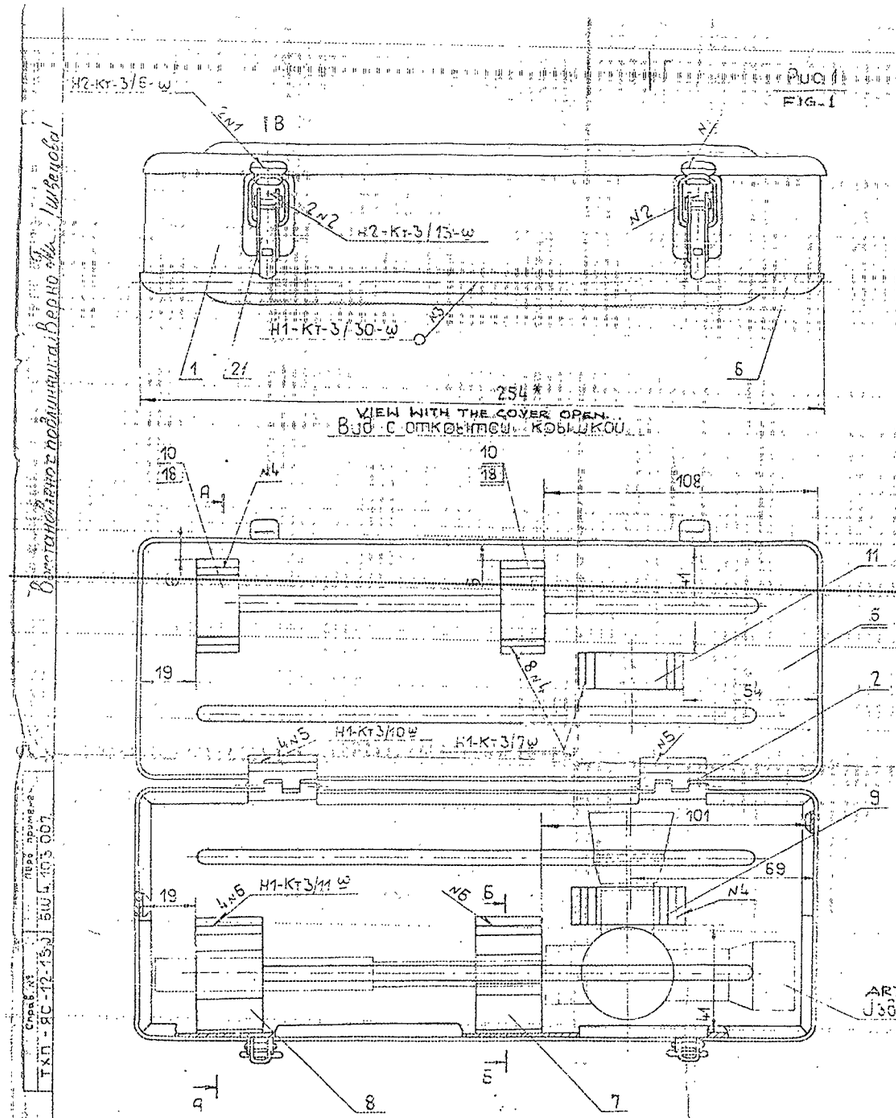

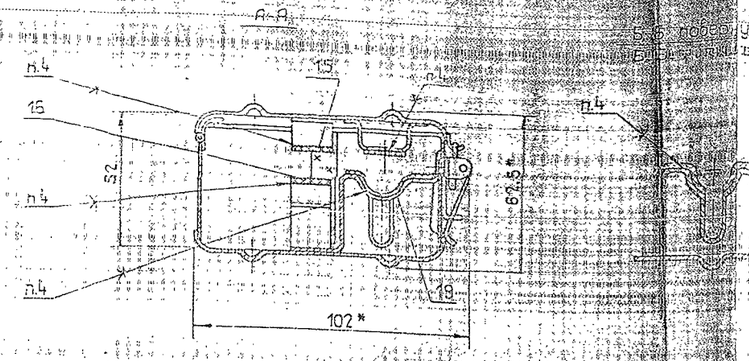

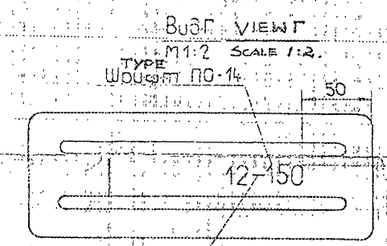

THE REST- REFER FIG-1
Остальное см. Рис 1

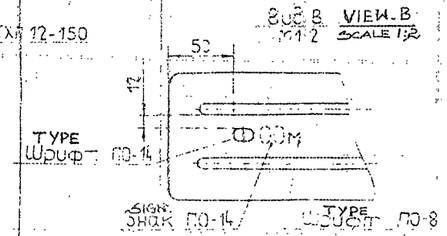

PART. NO Обозначение	FIG Рис	COATING. Покрытие
БШ4.103.007	1	Внутри эмаль МЧ-240ПМ ОСТ 6-10-701-79
-01	2	МП-16 ТУ6 : эмаль МЛ-165 GOST. ОСТ 12034-77

1. Dimensions for references.
2. To be sand blasted as per НБШО.054.012.
3. Welds are as per GOST 15878-79.
   Category of requirements welded joints: III as per OST 3-4001-77.
4. Glue 88 НП ТУ 38-105.540-73.
5. Inscriptions to be made with white enamel 311-51. GOST 9640-75.
   Letters and symbols are as per OST 3-894-72.
   Inscriptions may be raised.
6. Movement of the article in the case is not allowed. Additional gaskets 15, 18 may be provided.
7. Label and description in envelope 22 should be laid in the packing case.
8. For articles focussed for a finite distance, designation is БШ4.103.007.01.

40815 кг

БШ4.103.007СБ		Group No	A1.2
PACKING CASE		40815кг	
ASSEMBLY DRAWING		SHEET 1 of 1	MASS 0.65	SCALE 1:1
ISSUE DATE	REFERENCE	MATERIAL:	HEAVY VEHICLES FACTORY AVADI
APPROVED			
CHECKED			
DRAWN			

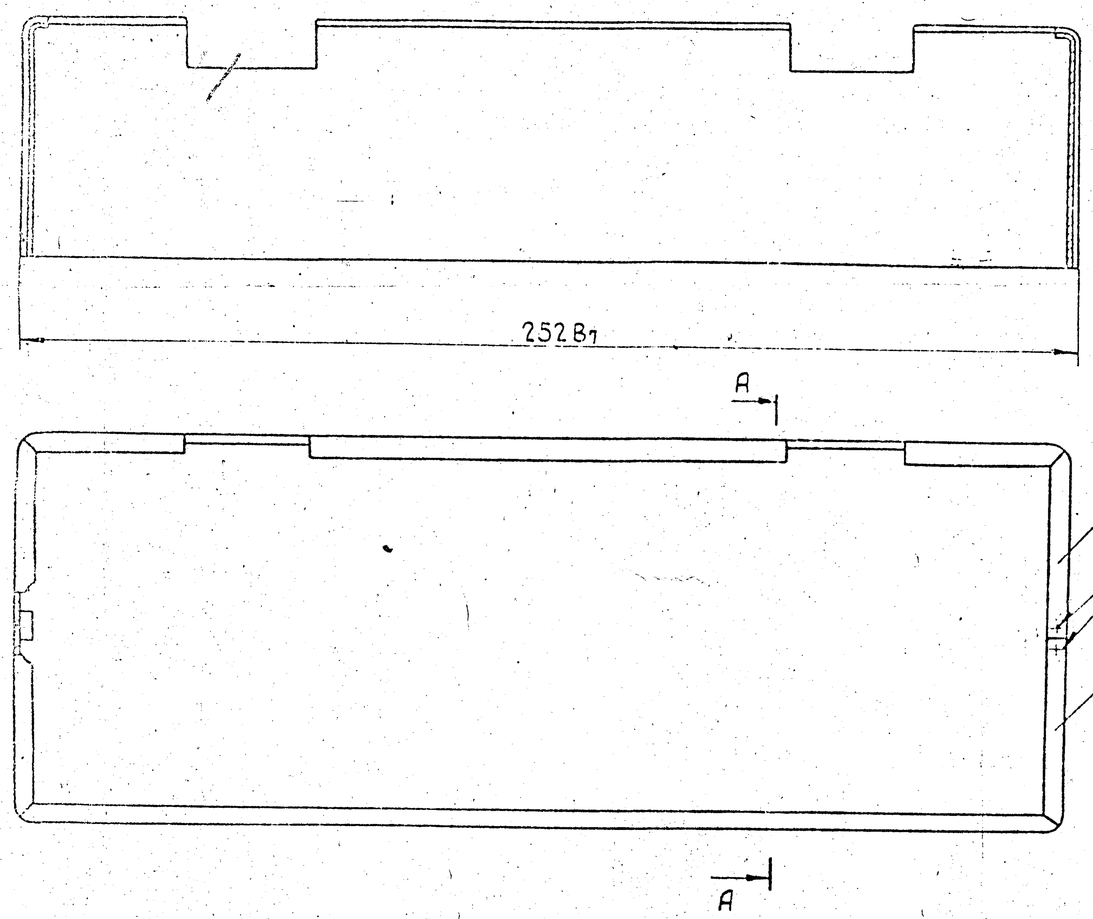

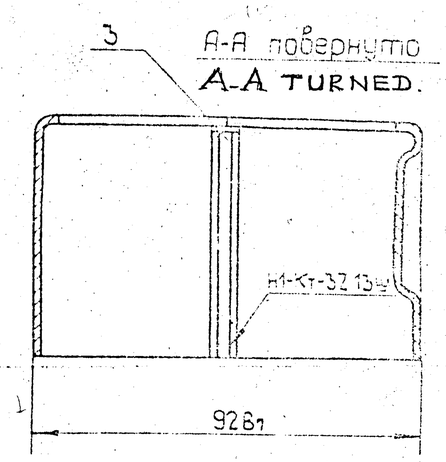

1. WELDS ARE AS PER GOST. 15878-70. CATEGORY OF REQUIREMENTS LAID ON WELDED JOINTS III, OST 3-4001-77.
2. ASSEMBLY SHOULD BE MATCHED WITH COMPONENT БШ8.050.39R. ALONG MATING DIMENSION.

40815 KD

40815

			БШ6.103.007СБ		
			HOUSING ASSEMBLY DRAWING.	SHEET 1 OF 1	MASS 0.26	SCALE 1:1
	28.9.91	D.C.(1):-5604-I DRG. SEALED			
	7.8.89	D.C.(1):-1330-I(P) DRG. PROV. SEALED			
ISSUE	DATE	RFERENCE	MATERIAL:	HEAVY VEHICLES FACTORY AVADI	
APPROVED		21/5/85			
CHECKED		21/5/85			
DRAWN		29/8/85			

F-R

D.C.(1)-1330-I(P), 5504-I.

БШ6.103.007СБ

БШ6.467.009

БШ6.467.009СБ

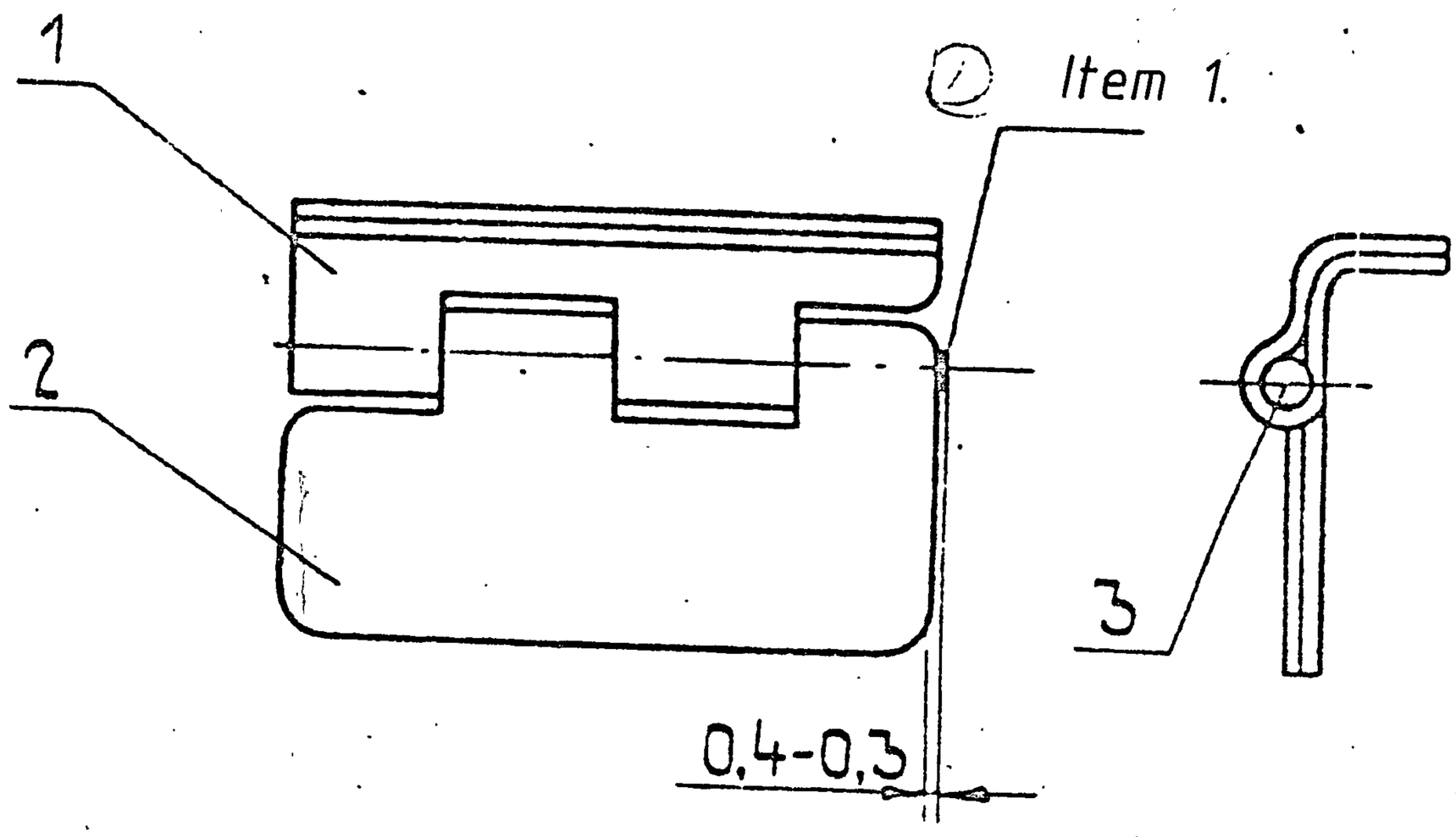

1. Gas welding. Excess of metal is not allowed. Welded joints, category 3, should be as per OST 3-4001-77.

D.C.(1):-5503-I:- DRG. SEALED.		27.9.91
D.C.(1):-1329-I(P) DRG. PROV. SEALED		7.8.89
AMENDMENTS	SIG	DATE

БШ 6,467.009 СБ

SNO	SHT	DOC NO	SIGN	DATE
DRAWN		R.H.Prasad.		29.10.84.
EDT, CHKD		B. Sankar		7.11.84
F/M, DC		S.R.Nair.		7.11.84
DIV.OFFR.		T.K. BANERJEE		11.12.84
		NAME	SIGN	DATE

HINGE
(ASSEMBLY DRAWING)

SHEET	WEIGHT	SCALE
	0,0104	2:1
	TOTAL SHEETS	

ORDANANCE FACTORY PROJECT HYDERABAD

D.C.(1):-1329-I(P), 5503-I.

FORMAT	ZONE.	REF. NO.	DESIGNATION.	DESCRIPTION.	QTY	REMARKS
				TECHNICAL PAPERS		
22			БШ 6.467.009 СБ	Assembly drawing.	1	
				PARTS		
11		1	БШ 8.660.029.	Hinge flap	1	
11		2	БШ 8.660.030.	Hinge flap	1	
				STANDARD ITEMS		
			M 25.82.005 (по M 25.82.000.)	Hinge flap (Blank for part БШ 8.660.029)	1	
			M 25.82.005. (по M25.82.000.)	Hinge flap (Blank for part БШ 8.660.030)	1	
		3	M 26.42.002.	Axle	1	As per M26. 42,000.
				D.C.(1):-5503-I:- SCH. SEALED.		27.9.91
				D.C.(1):-1329-I(P) SCH. PROV. SEALED		7.8.89
				AMENDMENTS	SIG	DATE

10/D-138

D.C.(1):-1329-I(P), 5503-I.

S.NO SHT	DOC.NO.	SIGN.	DATE
DRAWN BY	R.H.Prasad.		30.10.8
CHECKED	B. Saikeel		7.11.84
F/M.DC.	S.R.NAIR..		7.11.84
DIV.OFFR.	T.K. BANERJEE		11.12.84
	NAME.	SIGN.	DATE

БШ 6.467.009.

HINGE

SHT.NO.	TO.NO.OF.SHT

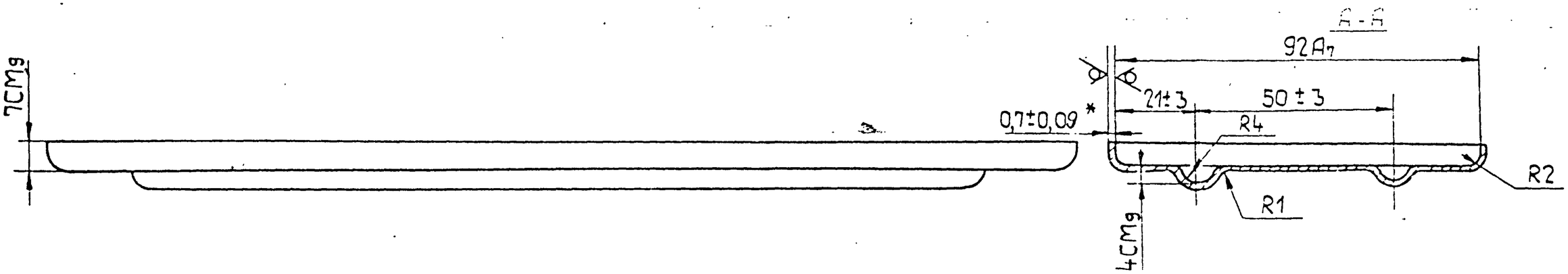

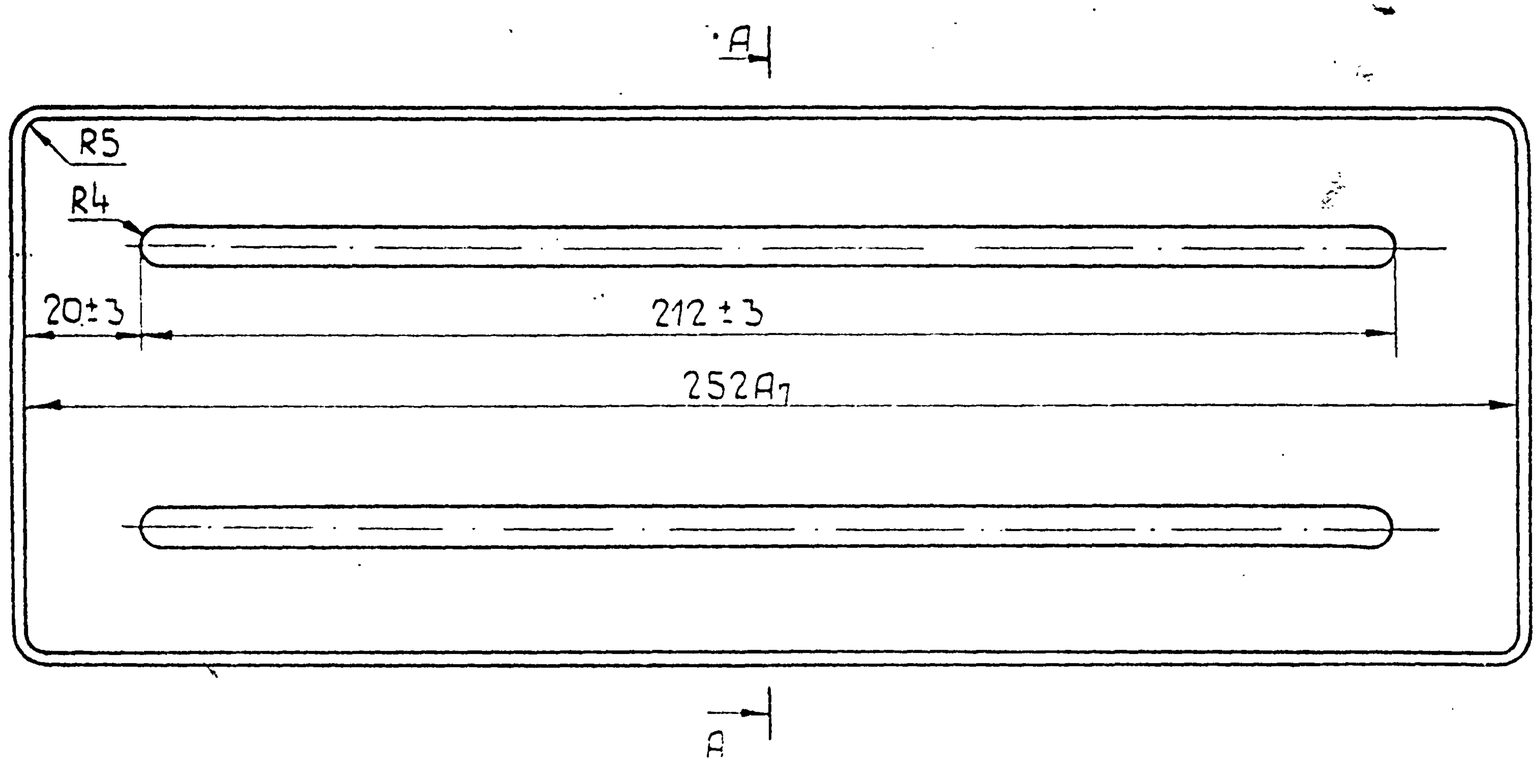

1*. DIMENSION FOR REFERENCE.

(a) INDIAN EQUVT. MATL:-
IS:513:2008, GRADE CR-2

		(a) DC:-7060-I. INDIAN EQUVT. MATL. ADDED.	5W8.050.392.			F-2 / 12
	28.9.91	D.C.(1):-5504-I DRG. SEALED.	COVER_BOTTOM (D)	SHEET	MASS	SCALE
	7.8.89	D.C.(1):-1330-I(P). DRG. PROV. SEALED.		1 OF 1	0.188	1:1
ISSUE	DATE	REFERENCE				
APPROVED		2/5/85	MATERIAL: COLD ROLLED SHEET 50,7 GOST 19904-74 KII-H-10KП GOST 16523-70	HEAVY VEHICLES FACTORY AVADI (7)		
CHECKED	M. Kumar	2/5/85				
DRAWN	P. Mallikarjun	29/4/85				

Восстановлено: длинника Шв / Шебаева

ТХП-ЯС-12-150 БШ4.103.007

5W8.050.392

D.C.(1)-1330-I(P) 5504-I 7060-I

5W8.070.075

Rz 80 (√)

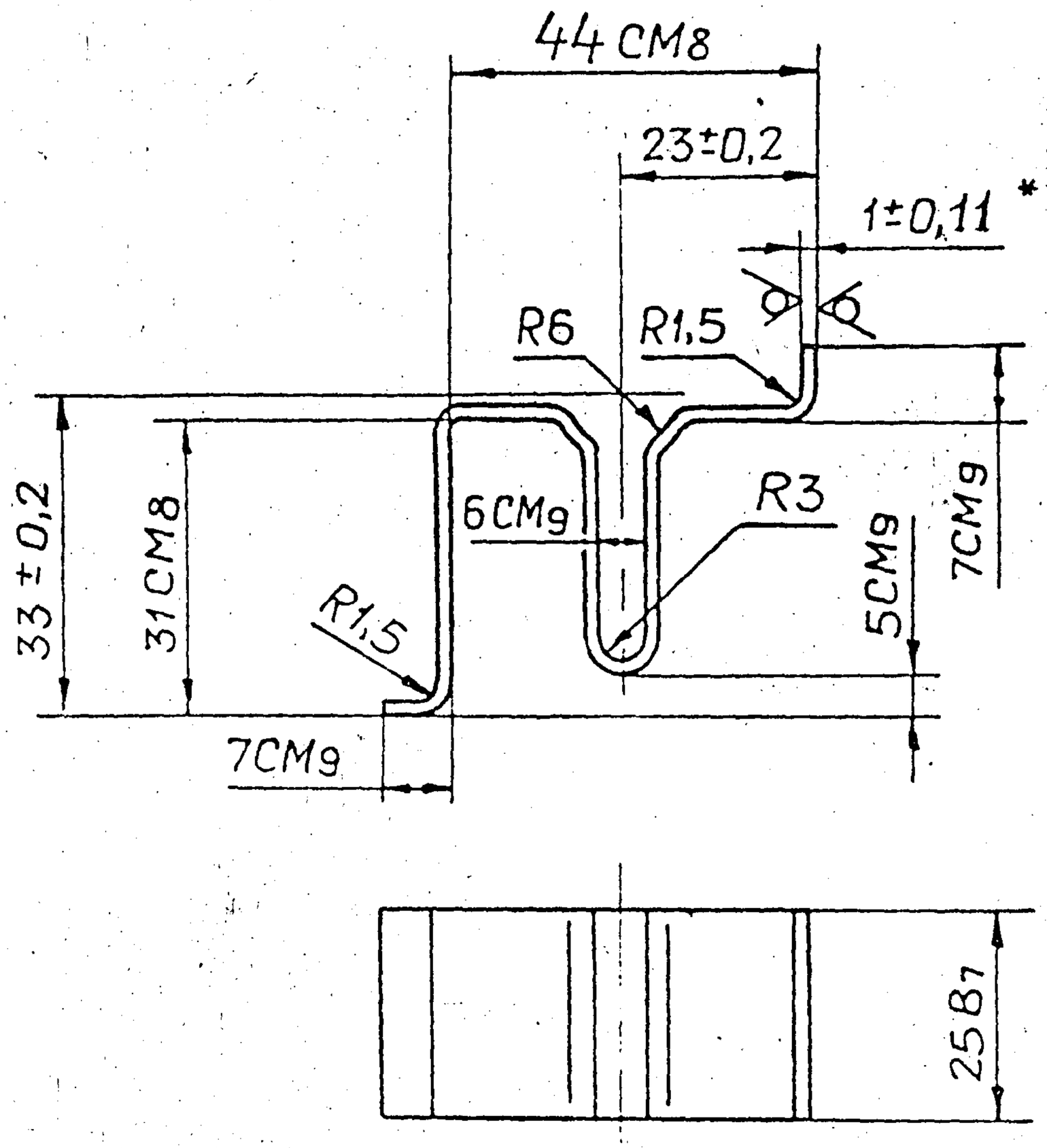

1*. DIMENSION FOR REFERENCE.

5W4.103.002

TxП - ЯС - 7-80

D.C.(1):-1330-I(P),5504-I.

40815/P

			5W8.070.075			F-R 13
	28.9.91	D.C.(1):-5504-I DRG. SEALED	BLOCK.	SHEET	MASS	SCALE
	7.8.89	D.C.(1):-1330-I(P). DRG. PROV. SEALED.		1 OF 1	0.031	1:1
ISSUE	DATE	REFERENCE				
APPROVED		2/5/85	MATERIAL: COLD ROLLED SHEET 51 GOST 19904 — 74	HEAVY VEHICLES FACTORY AVADI		
CHECKED	M. Kumar	2/5/85				
DRAWN		29/4/85	II- H-10KП GOST 16523-70			8

BW 8.070.078

Rz 80 (√)

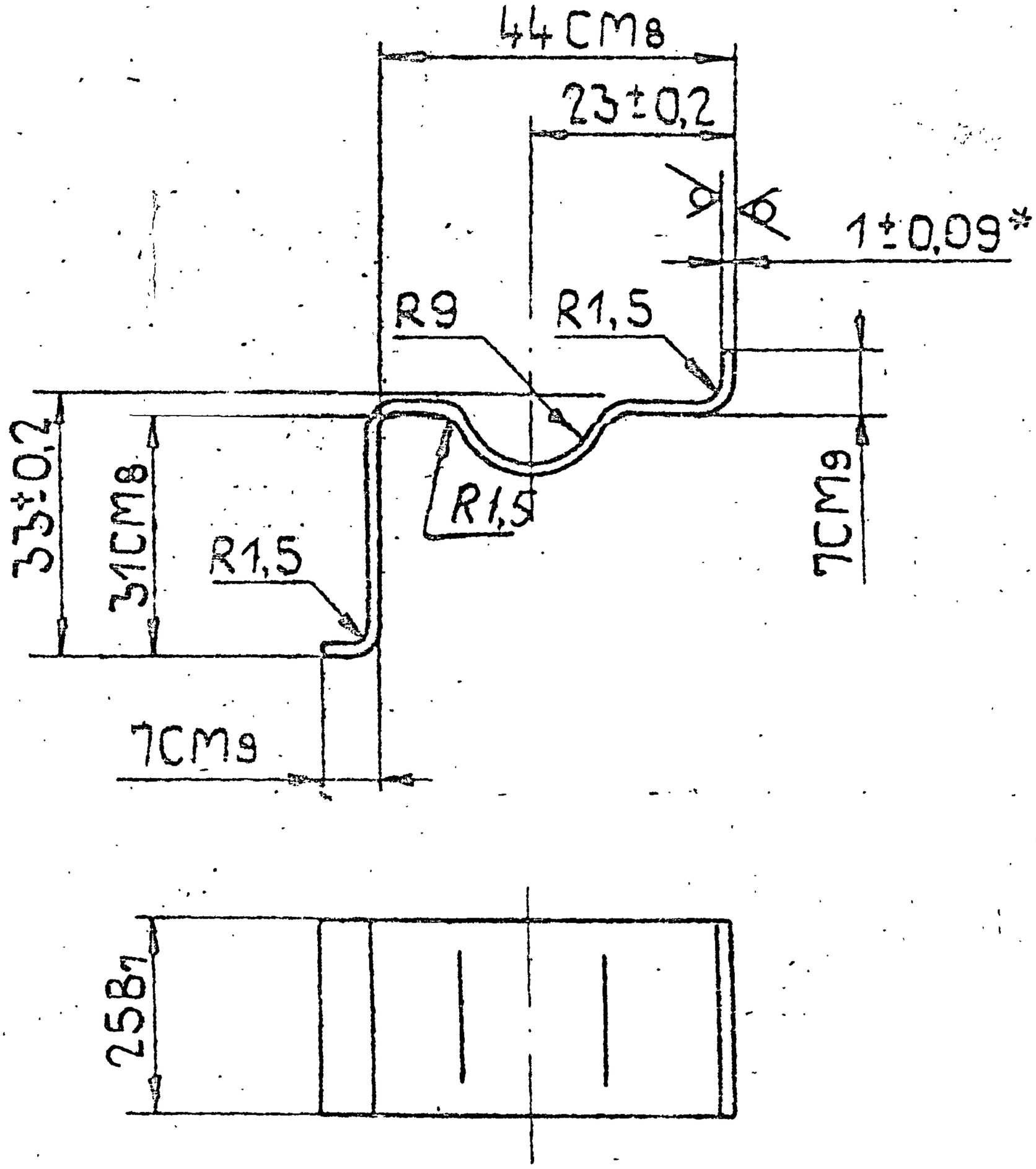

1. * Dimension is given for reference.

1* SHEET X/K Б 1 ГОСТ 19904-74.
II-H-10 КП ГОСТ 16523-70.

D.C.(1):-5503-I:- DRG. SEALED			27.9.91
D.C.(1):-1329-I(P) DRG. PROV. SEALED			7.8.89
AMENDMENTS		SIG	DATE
SNO	SHT	DOC NO	SIGN	DATE
DRAWN	R.H.Prasad.		29.10.8
EDT,CHKD	B. Saiyed		7-11-84
F/M,D.C.	S.R.Nair.		7-11-84
DIV.OFFR	T.K. BANERJEE		11-12-84
	NAME	SIGN	DATE

BW 8.070.078. A/3

BLOCK

SHEET	WEIGHT	SCALE.
	0,017	1:1

TOTAL SHEETS

ORDNANCE FACTORY
PROJECT
HYDERABAD

D.C.(1):-1329-I(P),5503-I

6W8.070.079

Rz80 (√)

БШ4.103.009

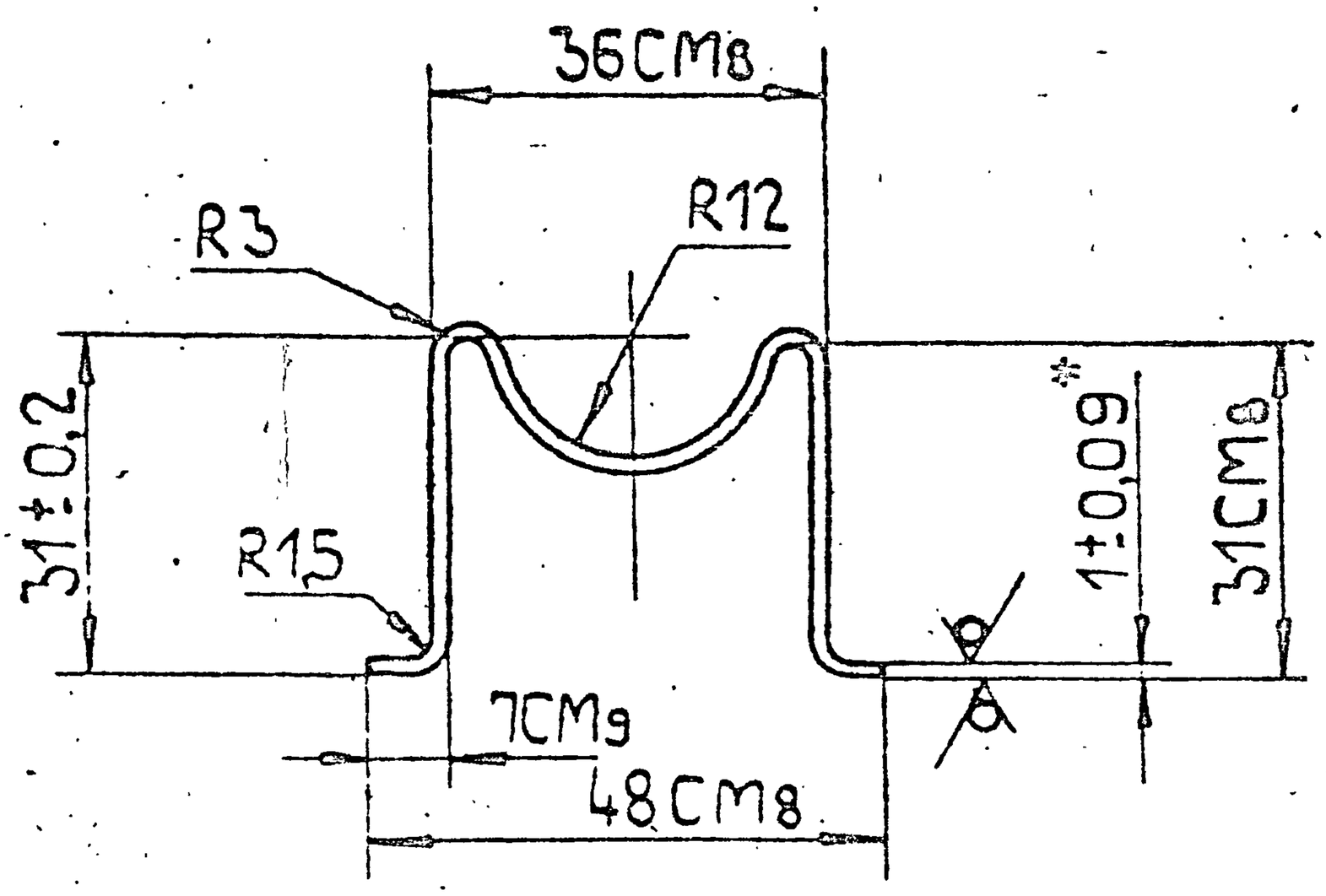

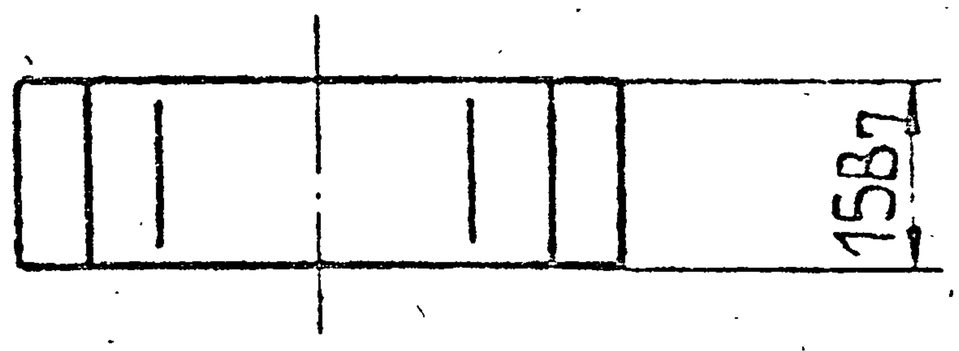

D.C.(I):-1329-I(P)

5503-I

1. * Dimension is given for reference.

*1 SHEET X/K Б 1 ГОСТ 19904-74.
II-H-10 КП ГОСТ 16523-70.

D-138

27.9.91		D.C.(1):-5503-I:- DRG. SEALED
7.8.89		D.C.(1):-1329-I(P) DRG. PROV. SEALED
DATE	SIG	AMENDMENTS
3	DOM	612-78 15.02.78

SNO	SHT	DOC NO	SIGN	DATE
DRAWN		R.H.Prasad.		29.10.84
EDT,CHKD		B. Samuel		7.11.84
F/M,DC.		S.R.Nair.		7.11.84
DIV.OFFR		T.K.BANERJEE		11.12.84
		NAME	SIGN	DATE

6W8.070.079

BLOCK

SHEET	WEIGHT	SCALE
1	0,013	1:1

TOTAL SHEETS 1

ORDNANCE FACTORY PROJECT HYDERABAD

*1

6W8 660029

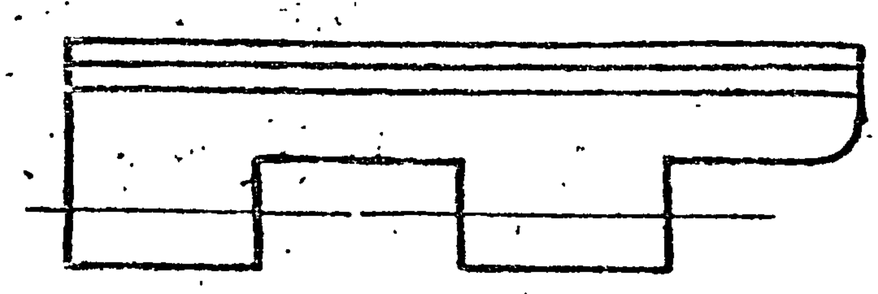

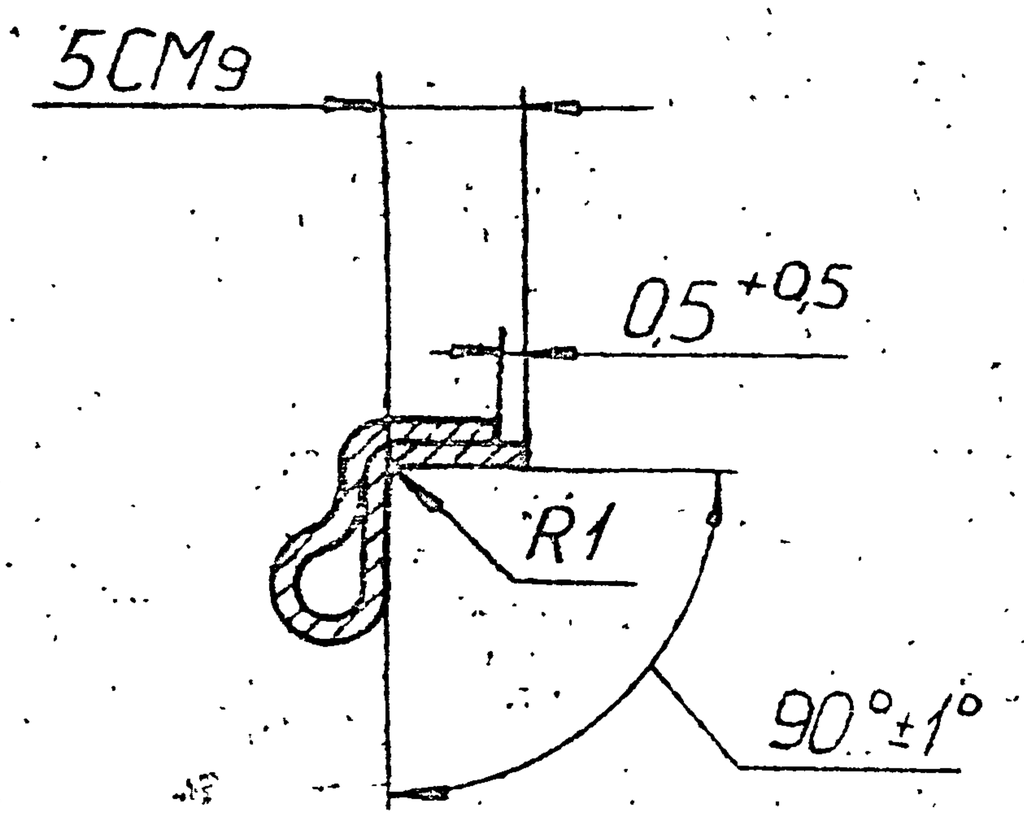

D.C.(1):-1329-I(P), 5503-I.

D.C.(1):-5503-I:- DRG. SEALED.		27.9.91
D.C.(1):-1329-I(P) DRG. PROV. SEALED		7.8.89
AMENDMENTS	SIG	DATE

19

D-138

6W8 660029

SNO	SHT	DOC NO	SIGN	DATE
DRAWN		R.H.Prasad.		29.10.84
EDT, CHKD		B. Sarkar		2-11-84
F/M, DC		S.R.Nair.		7.12.84
DIV. OFFR.		T.K. BANERJEE		11.12.84
		NAME	SIGN	DATE

HINGE FLAP

BLANK M25.82.005.
WITHOUT HOLES.

SHEET	WEIGHT	SCALE
	0.0048	2:1

TOTAL SHEETS

ORDANANCE FACTORY
PROJECT
HYDERABAD

6W 6.467.009

6W 8.660.030

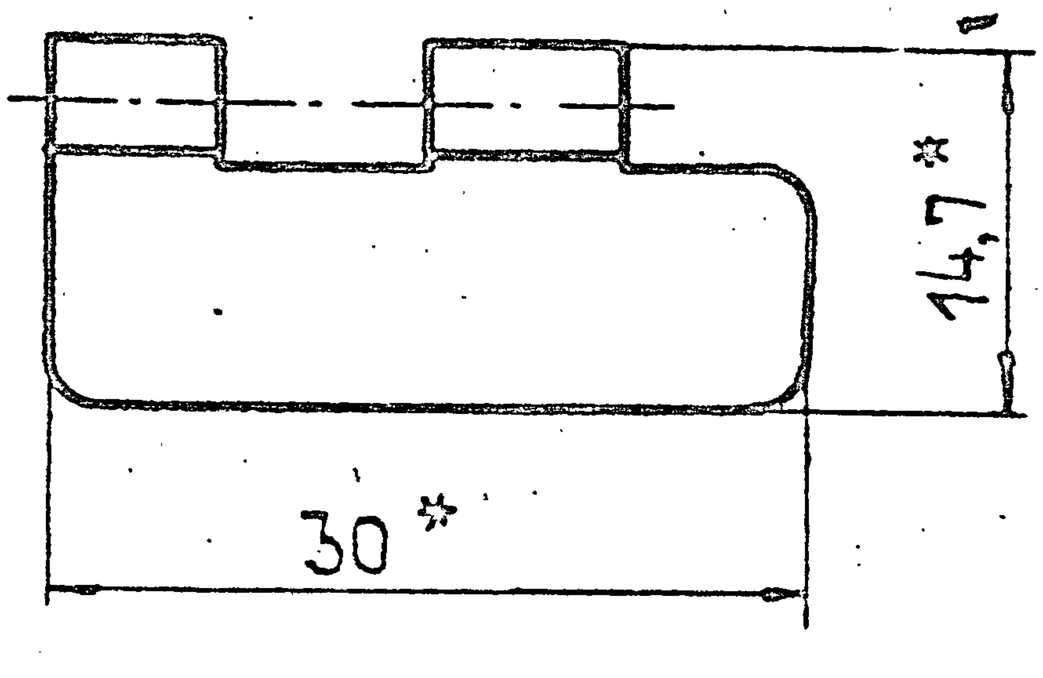

D.C. (1):-1329-I(P), 5503-I.

1. * Dimensions are given for reference.

D.C. (1):-5503-I:- DRG. SEALED.		27.9.91
D.C. (1):-1329 I (P) DRG. PROV. SEALED		7.8.89
AMENDMENTS	SIG	DATE

6W 8.660.030.

20/D.138

SNO	SHT	DOC NO	SIGN	DATE
DRAWN		R.H.Prasad.		29.10.84
EDT&CHKD		B. Sarkar		7.11.84
F/M, DC.		S.R.Nair.		7.11.84
DIV.OFFR		T.K. BAKERJEE		11.12.89
		NAME	SIGN	DATE

HINGE FLAP

BLANK M25.82.005.
WITHOUT HOLES.

SHEET	WEIGHT	SCALE.
	0,0048	2:1
TOTAL SHEETS		

ORDNANCE FACTORY
PROJECT
HYDERABAD

5W8.667.246

Rz80 (√)

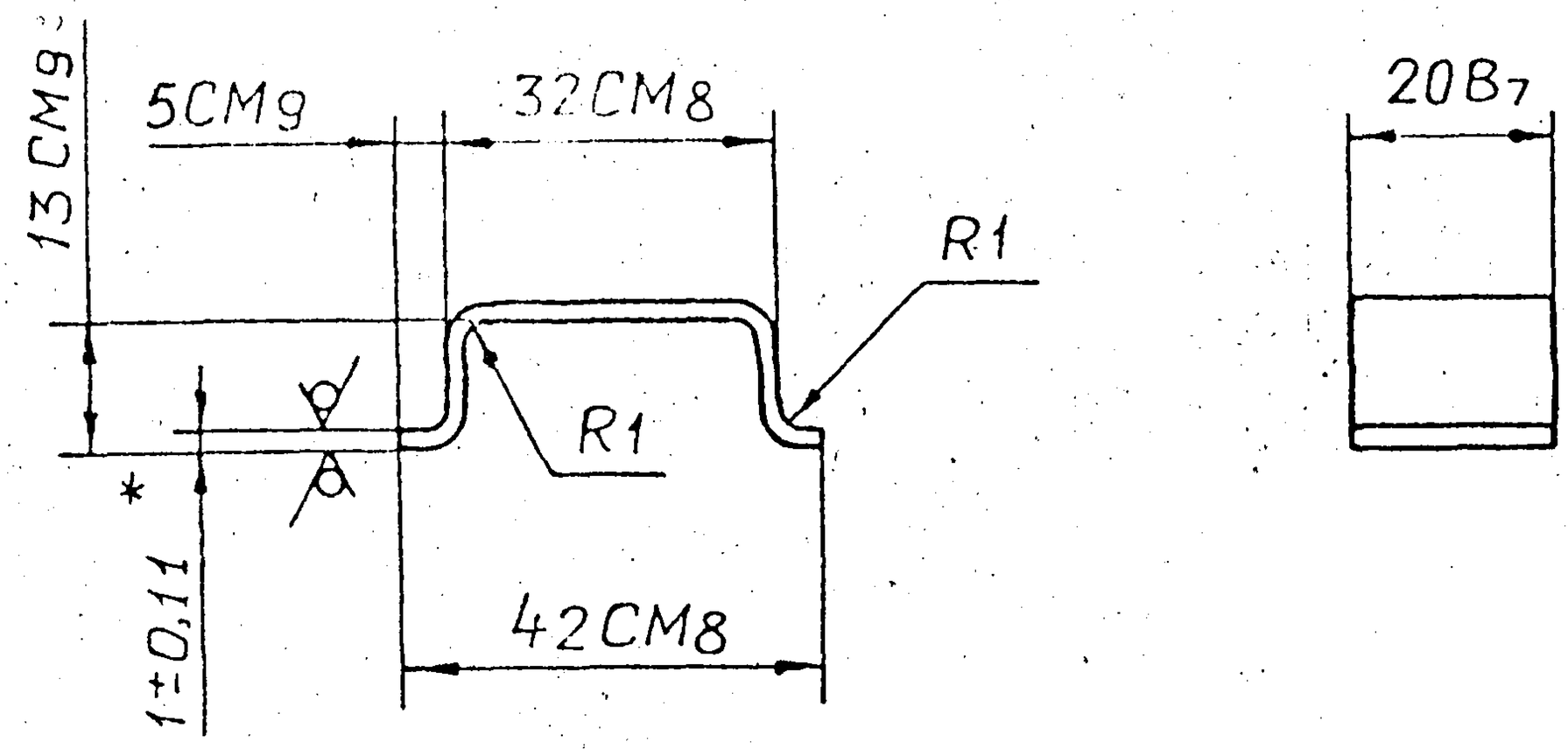

1. * DIMENSION FOR REFERENCE.

D.C.(1)-1330-I(P), 5504-I.

			5W8.667.246.			F-2 / 14
	28.9.91	D.C.(1):-5504-I DRG. SEALED	CLAMP.	SHEET	MASS	SCALE
	7.8.89	D.C.(1)1-1330-I(P). DRG. PROV. SEALED.		1 OF 1	0.043	1:1
ISSUE	DATE	REFERENCE				
APPROVED		2/5/85	MATERIAL: COLD ROLLED SHEET. 5I GOST 19904-74 II-H-10 KП GOST 16523-70	HEAVY VEHICLES FACTORY AVADI		
CHECKED	M. Kumaran	2/5/85				
DRAWN	P. Mathew	29/4/85				

9

БШ4.103.008

БШ8.667.249

Rz80 (√)

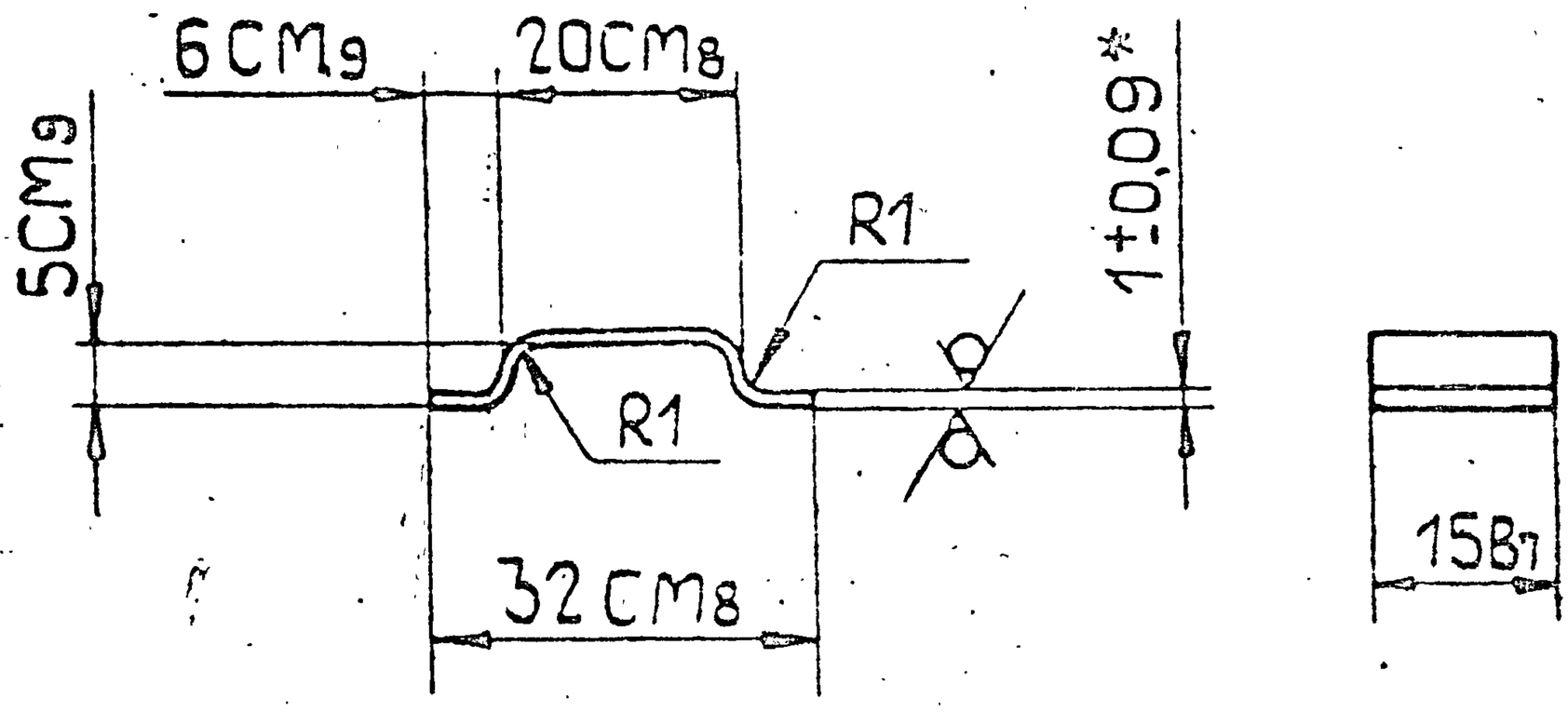

1. * Dimension is given for reference.

SHEET X/K $\frac{\text{Б 1 ГОСТ 19904-74}}{\text{II-Н-10-КП ГОСТ 16523-70.}}$

AMENDMENTS	SIG.	DATE
D.C.(I):-5503-I:- DRG. SEALED.		27.9.91
D.C.(I):-1329-I(P) DRG. PROV. SEALED		7.8.89

БШ8.667.249.

SNO	SHT	DOC NO	SIGN	DATE
DRAWN		R.H.Prasad.		29.10.84.
EDT&CHKD		B. Sarkar		7-11.84
F/M,DC.		S.R.Nair.		7.11.84
DIV.OFFR		T.K. BANERJEE		11.12.84
		NAME	SIGN	DATE

CLAMP

SHEET	WEIGHT	SCALE
	0,005	1:1

TOTAL SHEETS

ORDNANCE FACTORY PROJECT HYDERABAD

D.C.(I):-1329-I(P), 5503-I

Восстановлено с подлинника. Дерно Ш-Шиве

ТХП-ЯС-12-150 БШ4.103.007

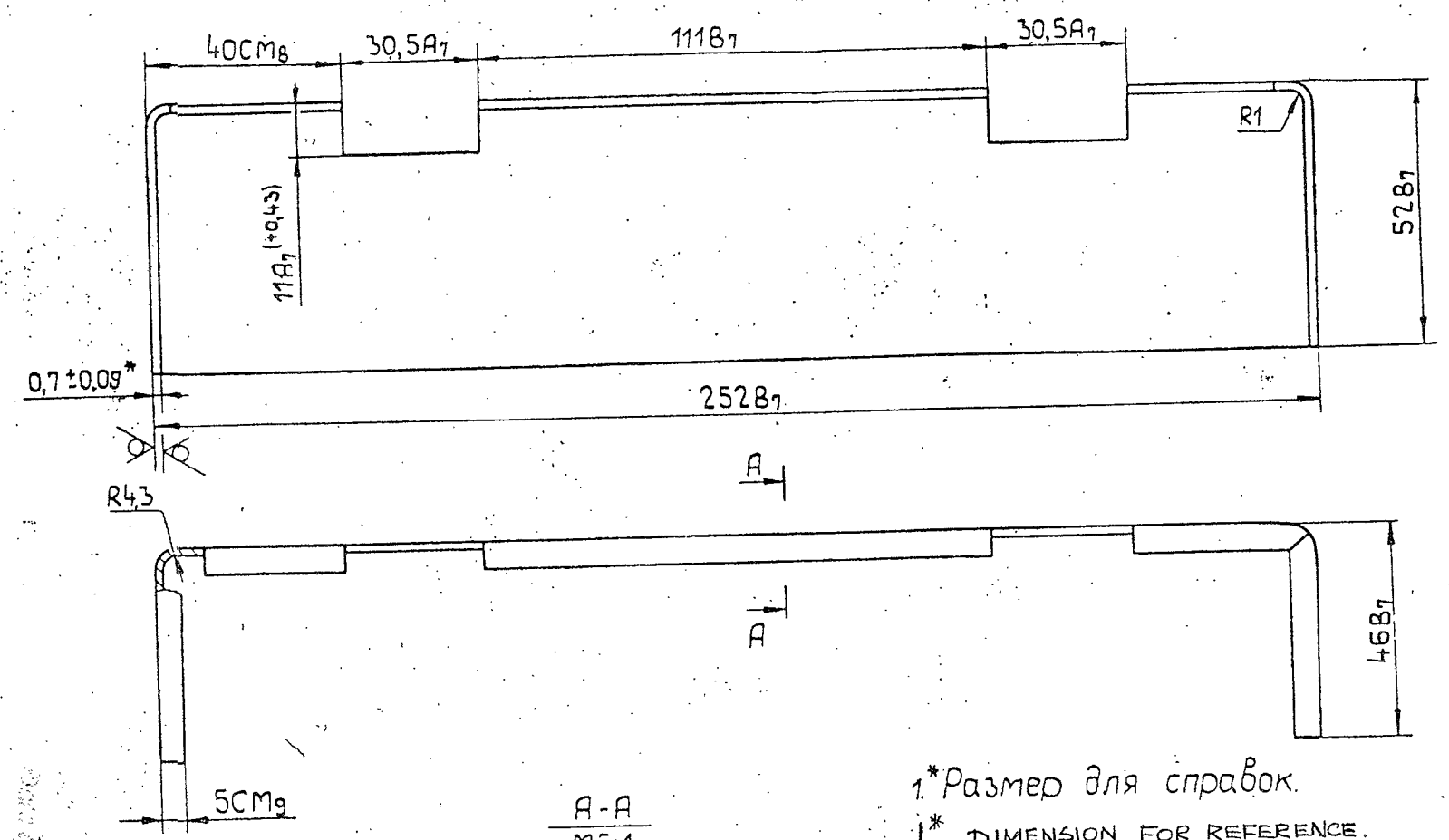

A-A
M5:1
SCALE 5:1

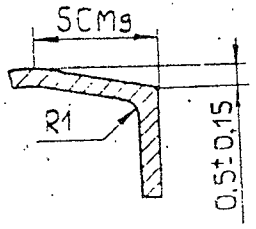

1.* Размер для справок.

1* DIMENSION FOR REFERENCE.

D.C.(1):-1330-I(P), 5504-I.

4081 5KA

			БШ8.030.028.		F-2. 10
	28.9.91	D.C.(1):-5504-I. DRG. SEALED.	HALF OF HOUSING	SHEET 1 OF 1	MASS 0.091	SCALE 1:1
	7.8.89	D.C.(1):-1330-I(P) DRG. PROV. SEALED				
ISSUE	DATE	REFERENCE			
APPROVED		2/5/83	MATERIAL: COLD ROLLED SHEET 50-7 GOST 19904-74	HEAVY VEHICLES FACTORY AVADI
CHECKED		21/5/85		
DRAWN		29/4/85	КП-Н-10КП GOST 16523-70	

Восстановлено с подлинника ГИ—Швецова

ТХП-ЯС-12-150 БШ4.103.00

БШ8.030.029

Rz80

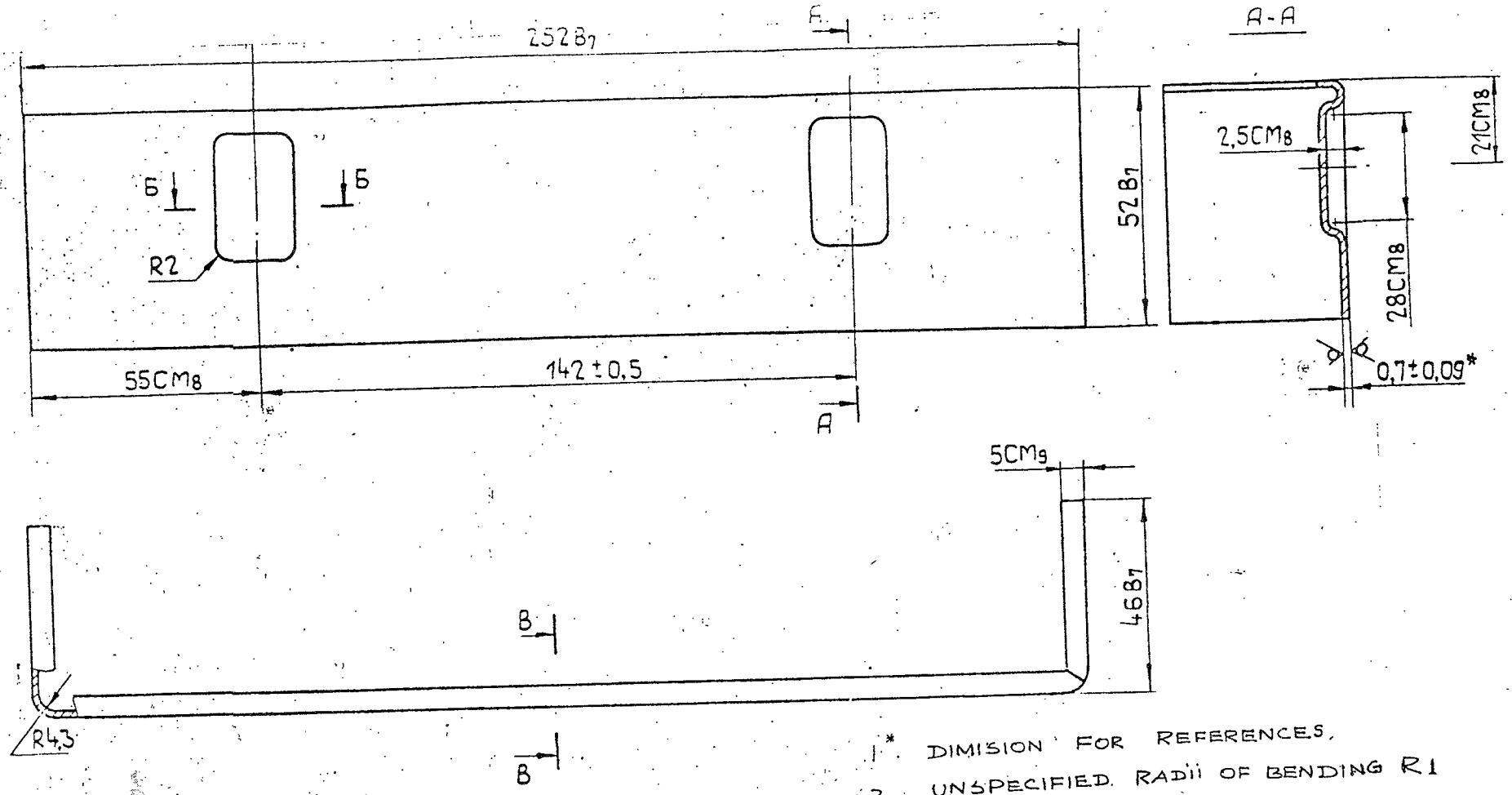

1* DIMISION FOR REFERENCES.

2. UNSPECIFIED RADII OF BENDING R1

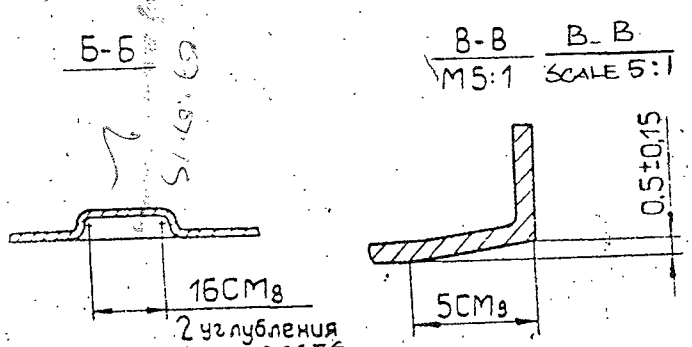

D.C.(1):-1330-I(P), 5504-I

1081570

			БШ8.030.029.		F-2 / 11
			HALF OF HOUSING	SHEET / MASS / SCALE	1 OF 1 / 0.123 / 1:1
	28.9.91	D.C.(1):-5504-I DRG.SEALED.			
16	7.8.89	D.C.(1):-1330-I(P). DRG.PROV.SEALED.			
ISSUE	DATE	REFERENCE			
APPROVED		2/5/85	MATERIAL: COLD ROLLED SHEET 50,7 GOST 19904-74 II-H-10КП GOST 16523-70	HEAVY VEHICLES FACTORY AVADI	
CHECKED		2/5/85			
DRAWN		28/4/85			

DEVELOPMENT
Развертка

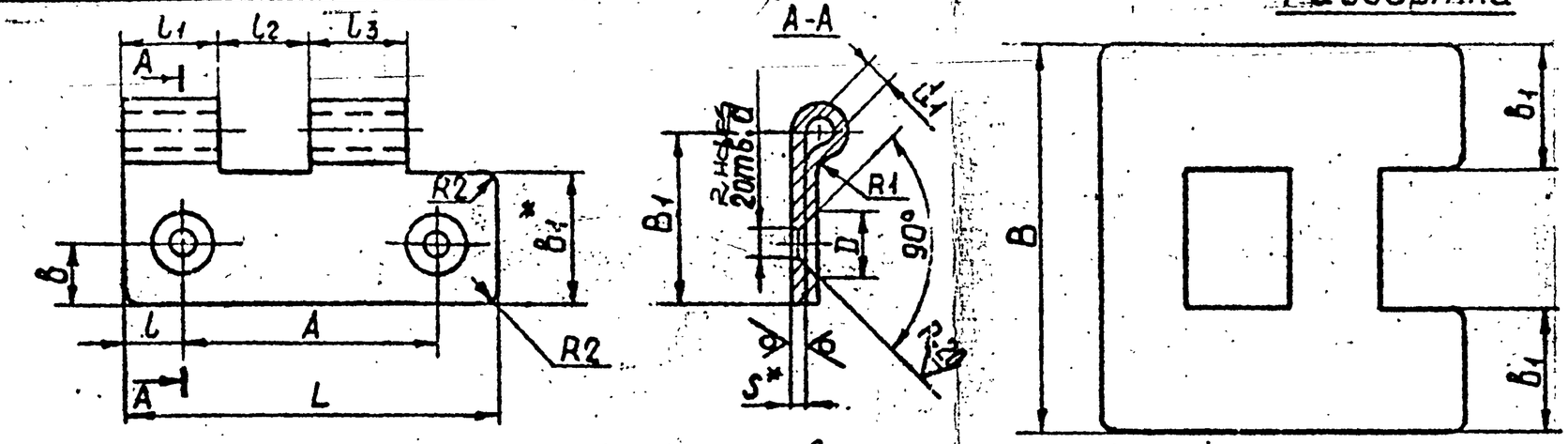

Размеры в мм DIMENSIONS, MM.

PART. NO Обозначение	L	B	B_1	A	l	l_1	l_2	l_3	b	b_1	D	d	d_1	S*
M25.82.004	20 B_7	18,5 B_7	7,5 ± 0,5	10 ± 0,18	5 ± 0,16	5 B_7	5 A_7	5 B_7	3 ± 0,16	5,5 B_7	4,5 A_7	2,4 A_7	1,5 A_7	0,5 -0,05
-01														0,5 -0,06
M25.82.005	30 B_7	31,3 B_7	12,5 ± 0,5	18 ± 0,22	6 ± 0,18	7 B_7	8 A_7	8 B_7	5 ± 0,16	9,5 B_7	6,4 A_7	3,2 A_7	2,8 A_7	0,8 -0,07
-01														0,8 -0,08
M25.82.006	40 B_7	41 B_7	17,5 ± 0,5	24 ± 0,26	8 ± 0,18	10 B_7	10 A_7	10 B_7	7,5 ± 0,18	14,5 B_7				0,8 -0,07
-01														0,8 -0,08
M25.82.022	25 B_7	26 B_7	10,5 ± 0,5	15 ± 0,2	5 ± 0,16	6 B_7	7 A_7	6 B_7	4 ± 0,16	8 B_7	4,5 A_7	2,4 A_7	2 A_7	0,5 -0,05
-01														0,5 -0,06

CONTINUATION.
Продолжение

PART. NO Обозначение	MATERIAL Материал	MASS Масса
M25.82.004	Лента 10 - М-НТ-2-0-0,5 ГОСТ 503-71	0,0020
-01	Лист Л63М 0,5 ГОСТ 931-70	0,0023
M25.82.005	Лента 10 - М-НТ-2-0-0,8 ГОСТ 503-71	0,0048
-01	Лист Л63М 0,8 ГОСТ 931-70	0,0054
M25.82.006	Лента 10 - М-НТ-2-0-0,8 ГОСТ 503-71	0,00906
-01	Лист Л63М 0,8 ГОСТ 931-70	0,0112
M25.82.022	Лента 10 - М-НТ-2-0-0,5 ГОСТ 503-71	0,0021
-01	Лист Л63М 0,5 ГОСТ 931-70	0,0024

(a) INDIAN EQUVT. MATL:- STEEL STRIP 'D' IS 513-86 OR 'D' 1079-IS-1079-73

5. EXAMPLE OF CONVENTIONAL DESIGNATION OF BRASS WING OF HINGE. OF LENGTH L = 20 MM IS;

PART. NO	NOMENCLATURE.
M25.82.004-01	HINGE WING AS PER M25.82.000

1. DIMENSIONS FOR REFERENCE.
2. ALTERNATE MATERIAL:-
   SHEET Б GOST. 19903-74.
   III-H-10 КП GOST 16523-70
3. WHEN BENDING THE AXIAL SHIFT NOT MORE THAN 0.5 mm IS ALLOWED.

(a) INDIAN EQUVT. MATL:- STEEL SHT. D/DD TO IS: 513-86 OR SHT D-1079 TO IS: 1079-73

ISSUE	DATE	REFERENCE
APPROVED		2/5/85
CHECKED		2/5/85
DRAWN		30/4/85

M.25.82.000. (D) A.3 4

HINGE WING

SHEET	MASS	SCALE
1 OF 1	REFER TABLE	1:1

MATERIAL: REFER TO TABLE.

HEAVY VEHICLES FACTORY AVADI

(D) DC: 7060-I, INDIAN EQUVT. MATL. ADDED	4.12.13.		
D.C. (D): -5503-I:- DRG. SEALED.	27.9.91		
D.C. (I): -1328-I(P): DRG. PROV. SEALED	7.8.89		
AMENDMENTS	SIG	DATE	

Справ. №
Подп. и дата
Инв. № дубл.
Взам. инв. №
D.C. (I): -1328-I(P), 5503-I, 7060-I

M25.85.804

Rz 80

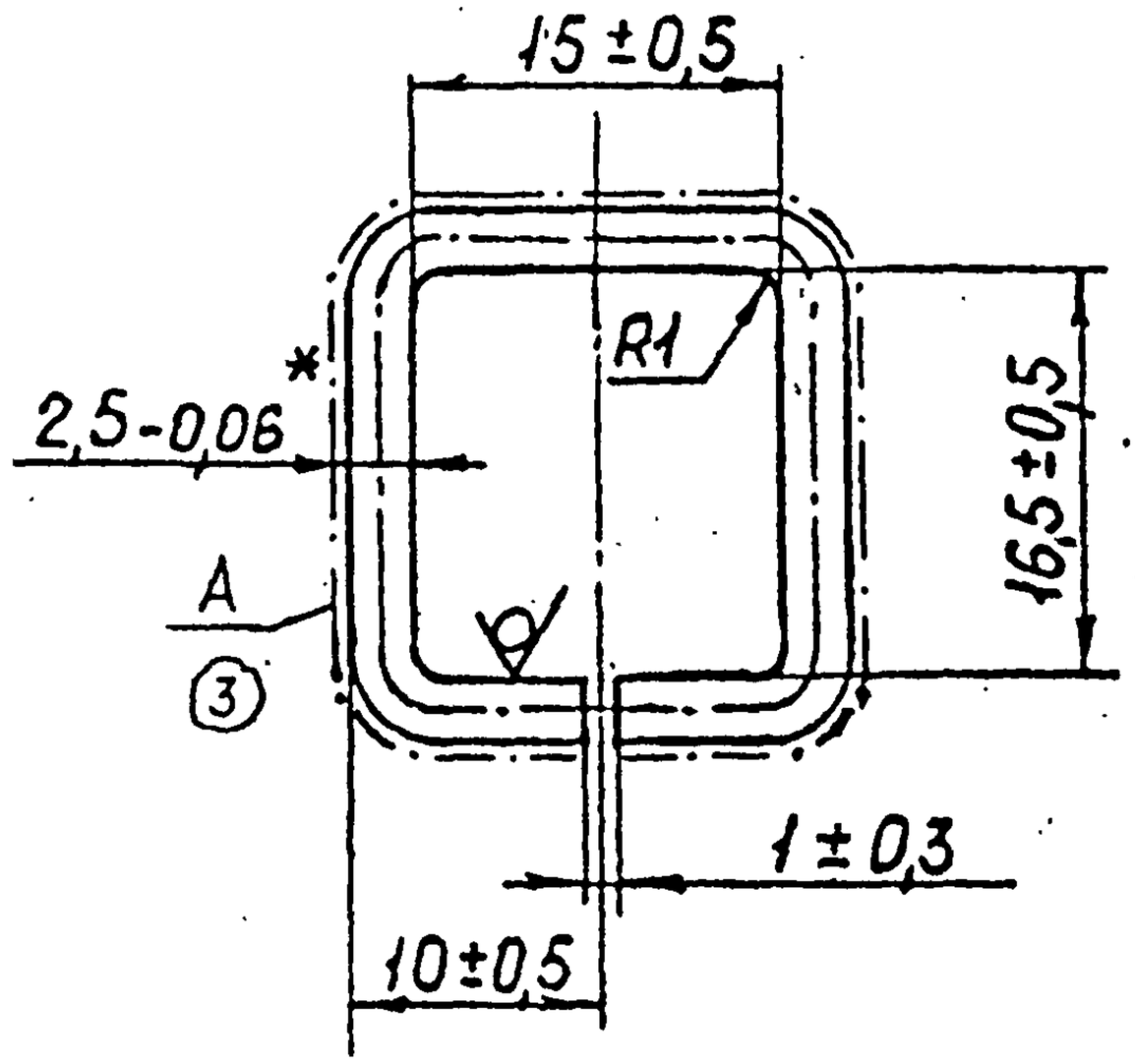

PART. NO	COATING.
M25.85.804	–
-01	TO POLISH SURFACE 'A'.

* DIMENSION FOR REFERENCES.

(a) INDIAN EQUVT. MATL:- IS:7887:1992, GRADE 10

40815KD

ISSUE	DATE	REFERENCE
C	4.12.13	(a)DC:-7060-I. INDIAN EQUVT. MATL ADDED
	27.9.91	D.C.(1):-5503-I DRG. SEALED.
B	7.8.89	D.C.(1):-1330-I(P). DRG.PROV. SEALED.

APPROVED		2/5/85
CHECKED	M. Kumar	2/5/85
DRAWN	P. Mathew	30/4/85

M25.85.804 (D) A-3/5

FRAME

SHEET	MASS	SCALE
1 OF 1	0.0025	2:1

MATERIAL: WIRE 25-20 GOST 17305-71

HEAVY VEHICLES FACTORY AVADI

Jnath

D.C.(1):-1330-I(P), 5503-I, 7060-I

M25.86.015

$R_z 40$ (√)

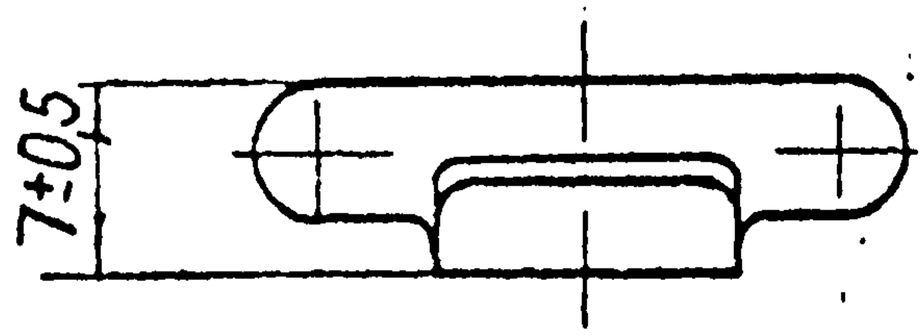

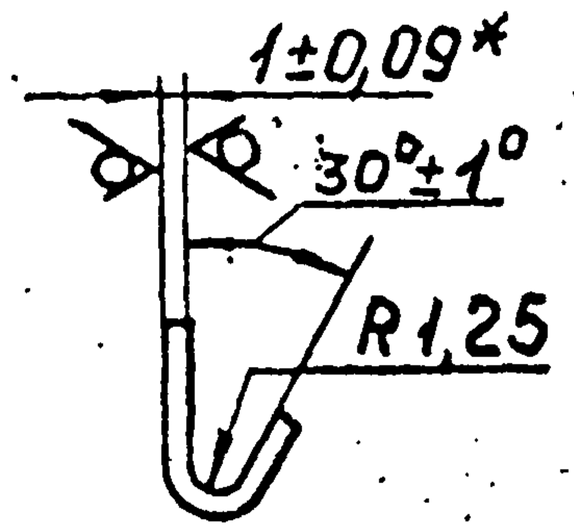

DEVELOPMENT

(1) Развертка

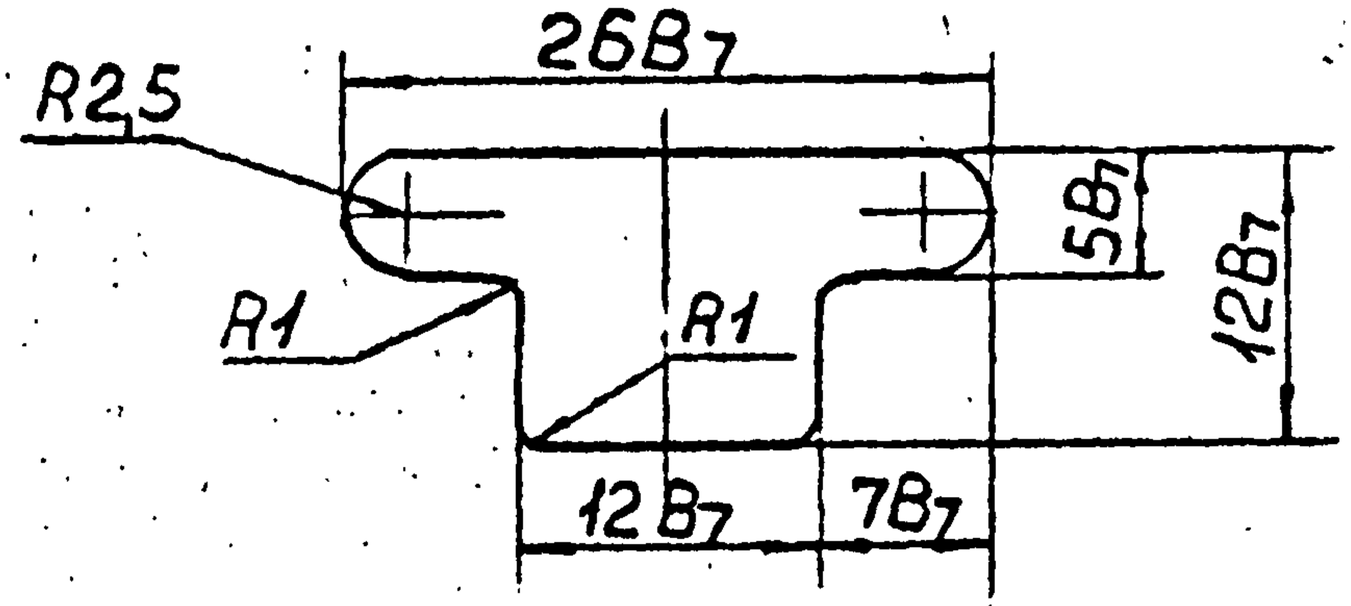

* DIMENSION FOR REFERENCES.

D.C.(1):-1330-I(P), 5503-I.

40815 KH

			M25.86.015. (D)	A-3 / 6	
	27.9.91	D.C.(1):-5503-I: DRG. SEALED.	HOOK	SHEET	MASS	SCALE
	7.8.89	D.C.(1):-1330-I(P). DRG.PROV.SEALED.		1 OF 1	0.0015	2:1
ISSUE	DATE	REFERENCE				
APPROVED		2/5/85	MATERIAL: COLD ROLLED SHEET 51 GOST 19904-74 II-H-10KTGOST 16523-70	HEAVY VEHICLES FACTORY AVADI (4)	
CHECKED	M. Kumar	2/5/85			
DRAWN	P. Malkiat	30/4/85			

Truth

M25.87.004

$R_z 40$ (V)

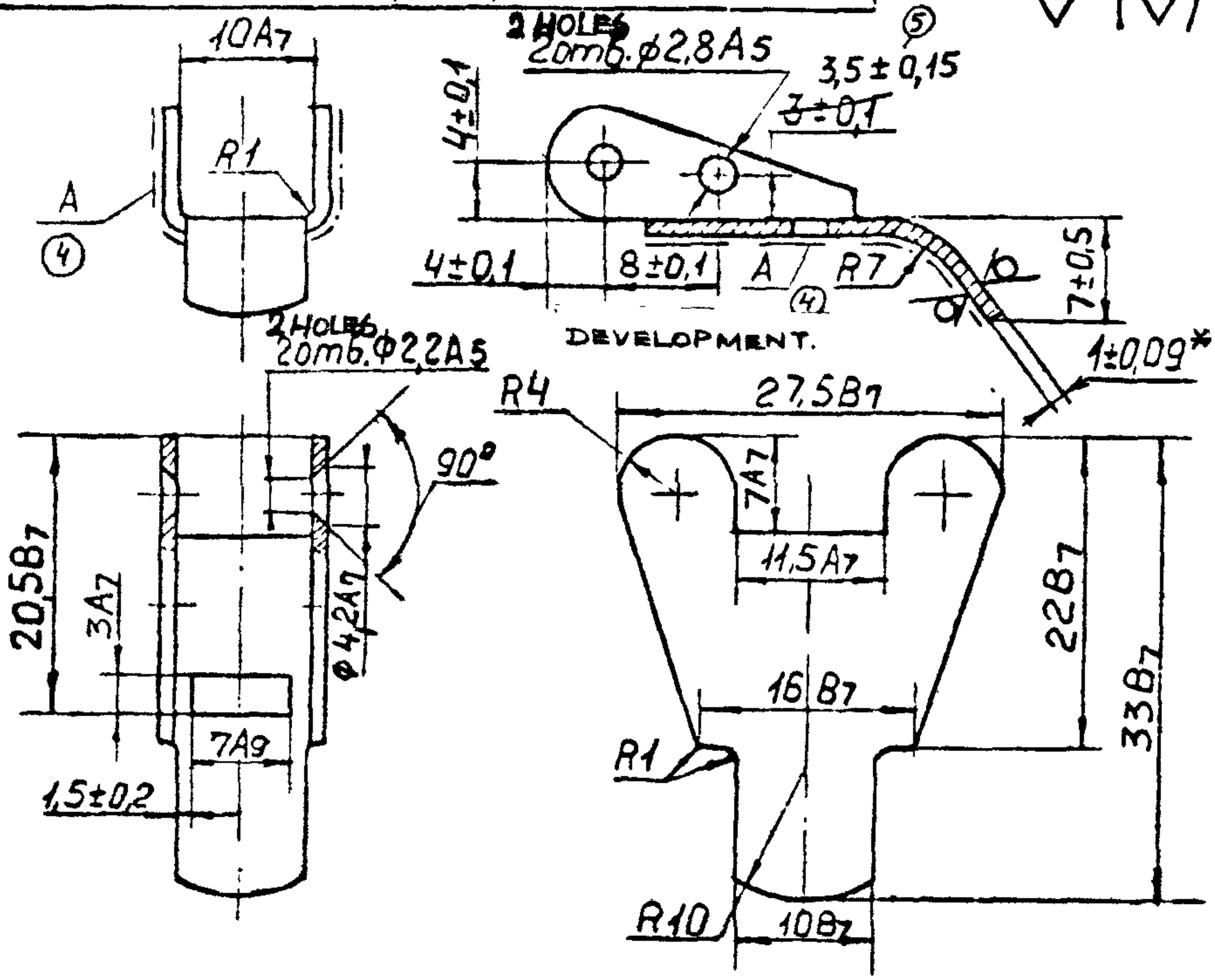

* DIMENSION FOR REFERENCES.

PART NO	COATING
M25 87 004	—
-01	TO POLISH SURFACE 'A'

D.C.(1):-1330-I(P), 5503-I.

M25.87.004

	27.9.91	D.C.(1):-5503-I:- DRG. SEALED.
	7.8.89	D.C (1):-1330-I(P). DRG. PROV. SEALED.
ISSUE	DATE	REFERENCE

APPROVED		2/5/85
CHECKED	M. Kumar	2/5/85.
DRAWN		30/4/85

M25.87 004.

A-3 / 7

CATCH

SHEET	MASS	SCALE
1 OF 1	0.0043	2:1

MATERIAL: COLD ROLLED SHEET, 51 GOST 19904-74 / II-H-10KП GOST 16523-70

HEAVY VEHICLES FACTORY AVADI (5)

M 25.88.024

$R_z 40$ (√)

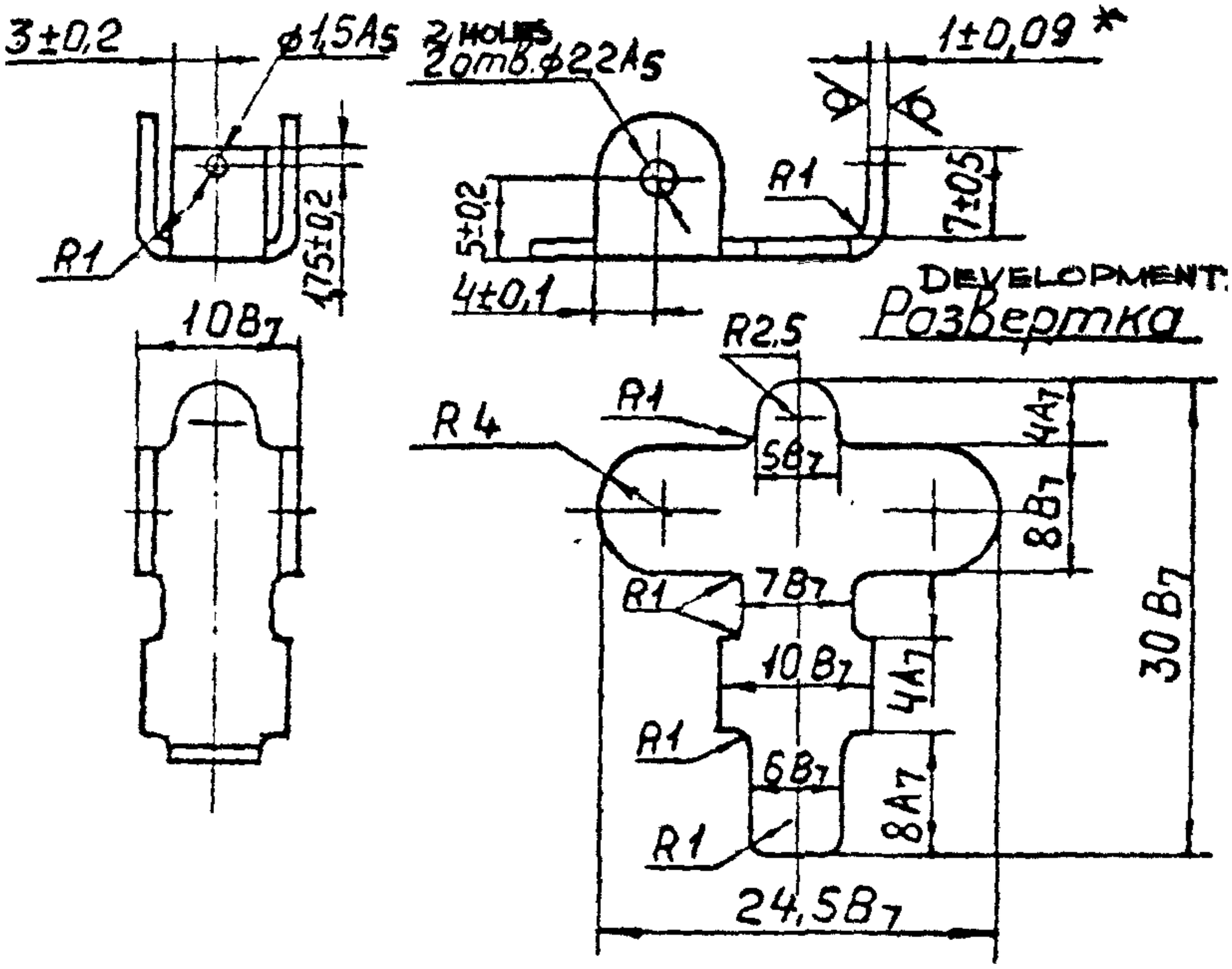

* DIMENSION FOR REFERENCES.

40 ПЛКD

M25.88.024.

A.3 / 8

ISSUE	DATE	REFERENCE
	27.9.91	D.C.(1):-5503-I:- DRG. SEALED
16	7.8.89	D.C (1):-1330-I(P). DRG PROV SEALED

APPROVED		2/5/85
CHECKED		2/5/85
DRAWN		30/4/85

BASE

SHEET	MASS	SCALE
1 OF 1	0.003	2:1

MATERIAL: COLD ROLLED SHEET. 51 GOST 19904-74
II-H-10KП GOST 16523-70

HEAVY VEHICLES FACTORY
AVADI

6

D.C.(1):-1330-I(P),5503-I.

M26.42.103

M28.59.316

D.C.(1):-1330-I(P), 5503-I, 7060-I.

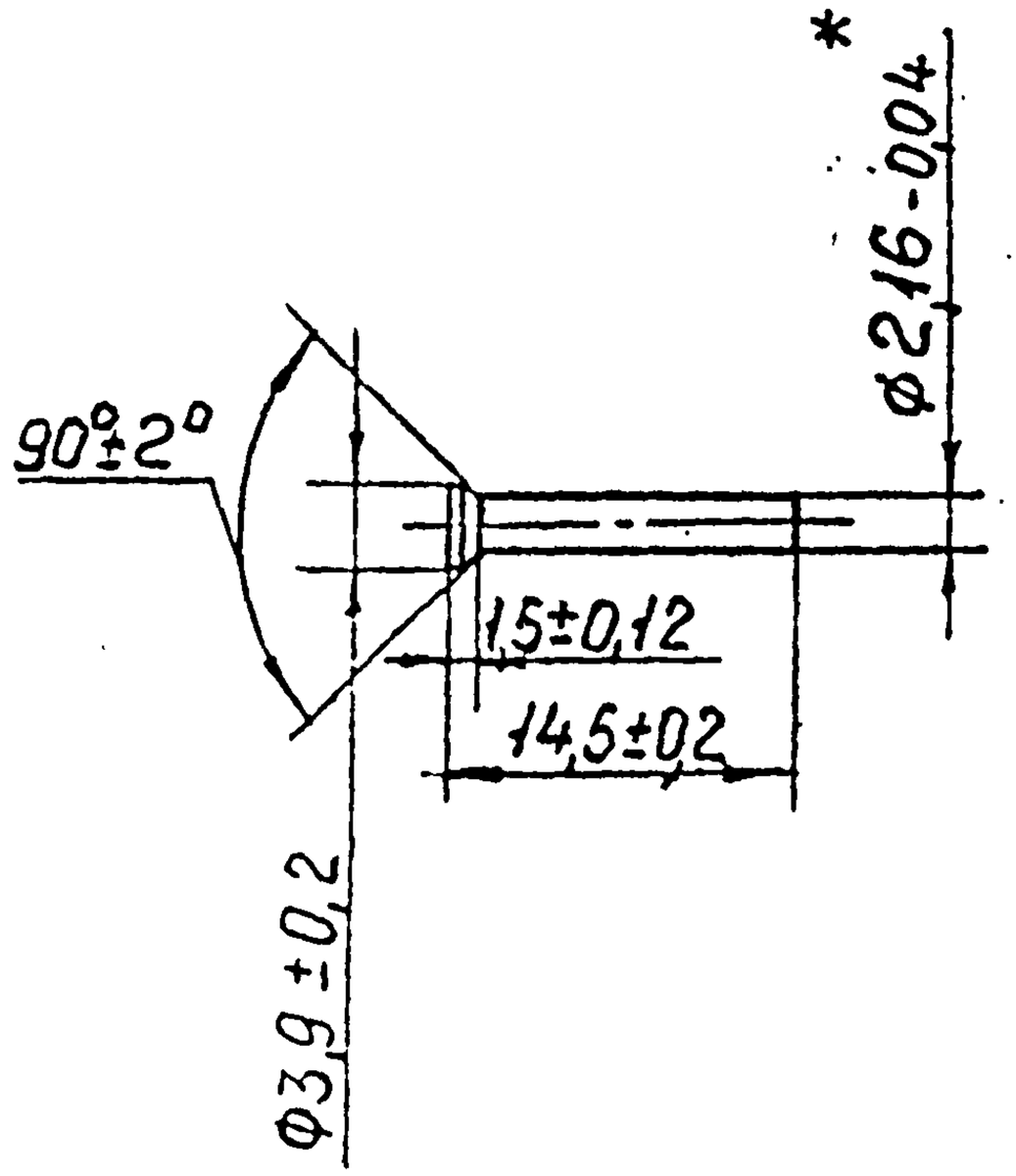

1. ALTERNATE MATERIAL:-
   WIRE. M10 GOST 5663-51.
   (FOR LOCKS M28.59.316 HAVING ENAMEL COATING IN ASSEMBLY)
2. * DIMENSION FOR REFERENCES.
3. COATING:- Ni. 9.

(a)
INDIAN EQUVT. MATL:-
IS: 2704:83 GRADE CuZn 35(HA)

40815 KD

ISSUE	DATE	REFERENCE
G	4.12.13	(a) DC:-7060-I. INDIAN EQUVT. MATL ADDED
	27.9.91	D.C.(1):-5503-I:- DRG. SEALED.
	7.8.89	D.C.(1)-1330-I(P). DRG. PROV. SEALED.

APPROVED		2/5/13
CHECKED	M. Khan	2/5/85
DRAWN	S. Mathew	30/4/85

M26. 42. 103 (D) A-3 10

AXLE

SHEET	MASS	SCALE
1 OF 1	0.0005	2:1

MATERIAL:
WIRE. 2.16 A63
GOST 12920-67.

HEAVY VEHICLES FACTORY
AVADI (8)

Копировал Формат 11

M26.42.000

$R_z 80$ (V)

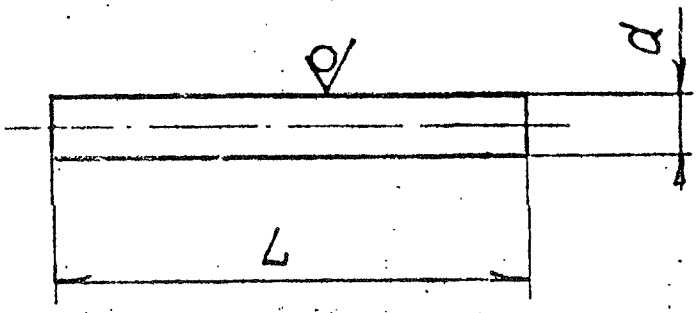

Sizes in mm

1)

Designation	d	L	Mass, kg
M26.42.001	1.6-0.06	21 B_7	0.00034
002	2.5-0.06	31 B_7	0.00120
003	2.5-0.06	41 B_7	0.00160
004	6.0-0.08	61.5 B_7	0.01366
005	3.0-0.06	43 B_7	0.00239
006	2.0-0.06	37 B_7	0.00092
007	3.5-0.08	67 B_7	0.00506
008	7.0-0.10	62 B_7	0.01873
009	6.0-0.08	27 B_7	0.00600
M26.42.013	1.8-0.06	26 B_7	0.00052

Инв. № подл. | Подп. и дата | Взам. инв. №

D.C.(I):-1328-I(P)-5503-I

D.C.(I):-5503-I:- SCH. SEALED.		27.9.91
D.C.(I):-1328-I(P) SCH. PROV. SEALED.		7.8.89
AMENDMENTS	SIG	DATE

G.No 40001KD-E5 28/D2116

APPROVED	M Vasu	M 26.42.000	WEIGHT	SCALE
CHECKED	B P Rao	AXLES	See Table	
CONTROLLERATE OF INSPECTION (ICV)		Wire 20	SHT 2	SHTS

M27.74.001

(V)

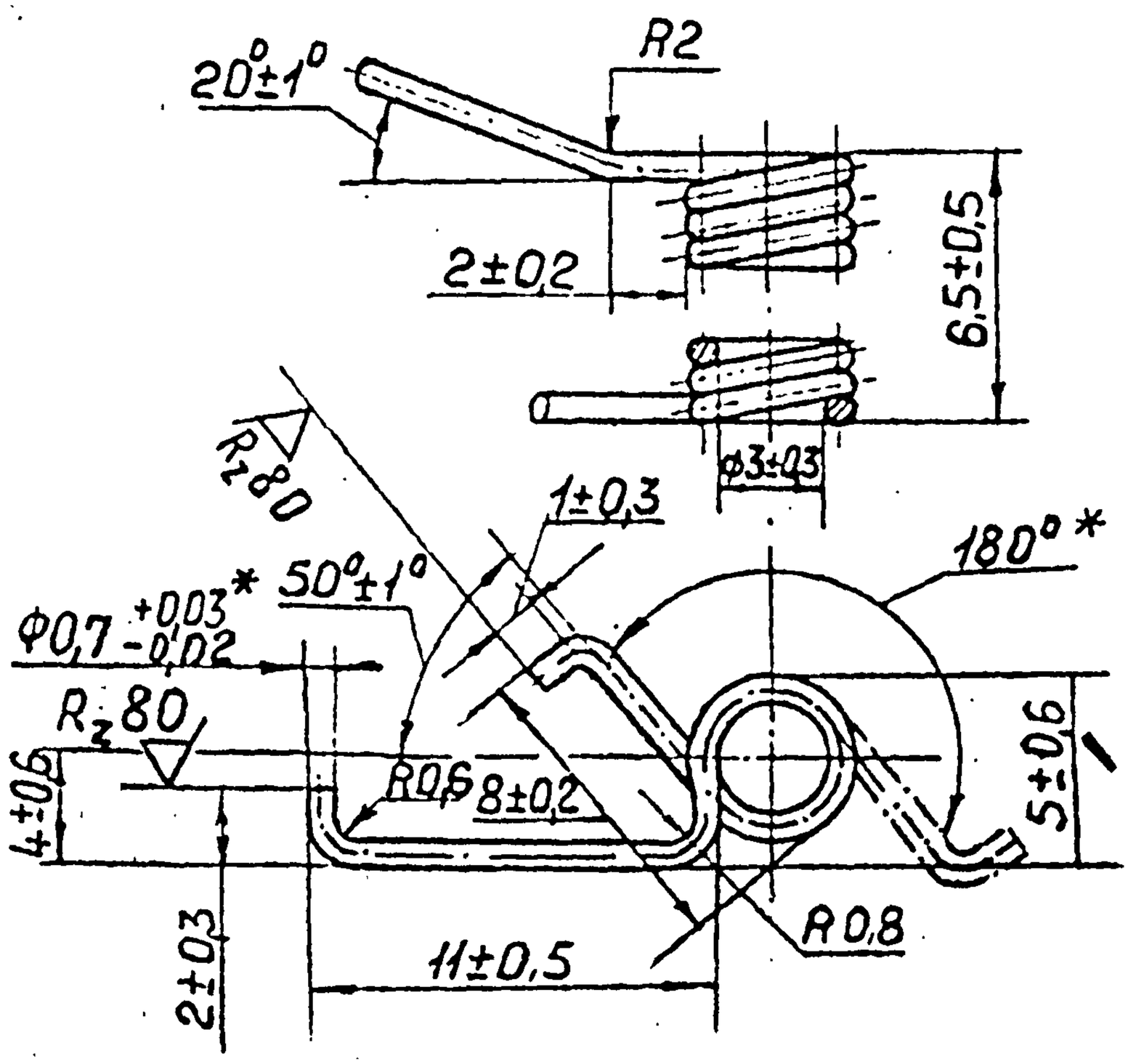

1*. DIMENSIONS FOR REFERENCE.

2. LENGTH OF STRAIGHTENED SPRING.
L = 130 mm.

3. COILING OF SPRING IS RIGHT HAND.

4. $n_1 = 9$.

5. FORCE OF THE SPRING IS NOT STANDARDISED.

6. COATING: CHEMICAL OXIDIZING, OIL FINISHING.

(a) INDIAN EQUVT. MATL:- IS:4454 PART-I/2001, GRADE-DH WITH RESTRICTED % C 0.75-1.0 AND MECHANICAL/PHYSICAL PROPERTIES AS PER OEM SPEC. MAY BE USED.

D.C.(1):-1330-I(P), 5503-I, 7060-I

40815 KD

			M27.74.001	(D)	A-3 / 11
	4.12.13	(a) DC:-7060-I INDIAN EQUVT. MATL ADDED.			
	27.9.91	D.C.(1):-5503-I: DRG. SEALED.	SPRING	SHEET	MASS	SCALE
	7.8.89	D.C.(1):-1330-I(P). DRG.PROV.SEALED.		1 OF 1	0.00043	4:1
ISSUE	DATE	REFERENCE				
APPROVED		2/5/85	MATERIAL: WIRE I-0.7 GOST 9389-75.	HEAVY VEHICLES FACTORY AVADI		
CHECKED	M. Kumar	2/5/85				
DRAWN	P. Mallikarjun	30/4/85				

9

M28.59.316CB

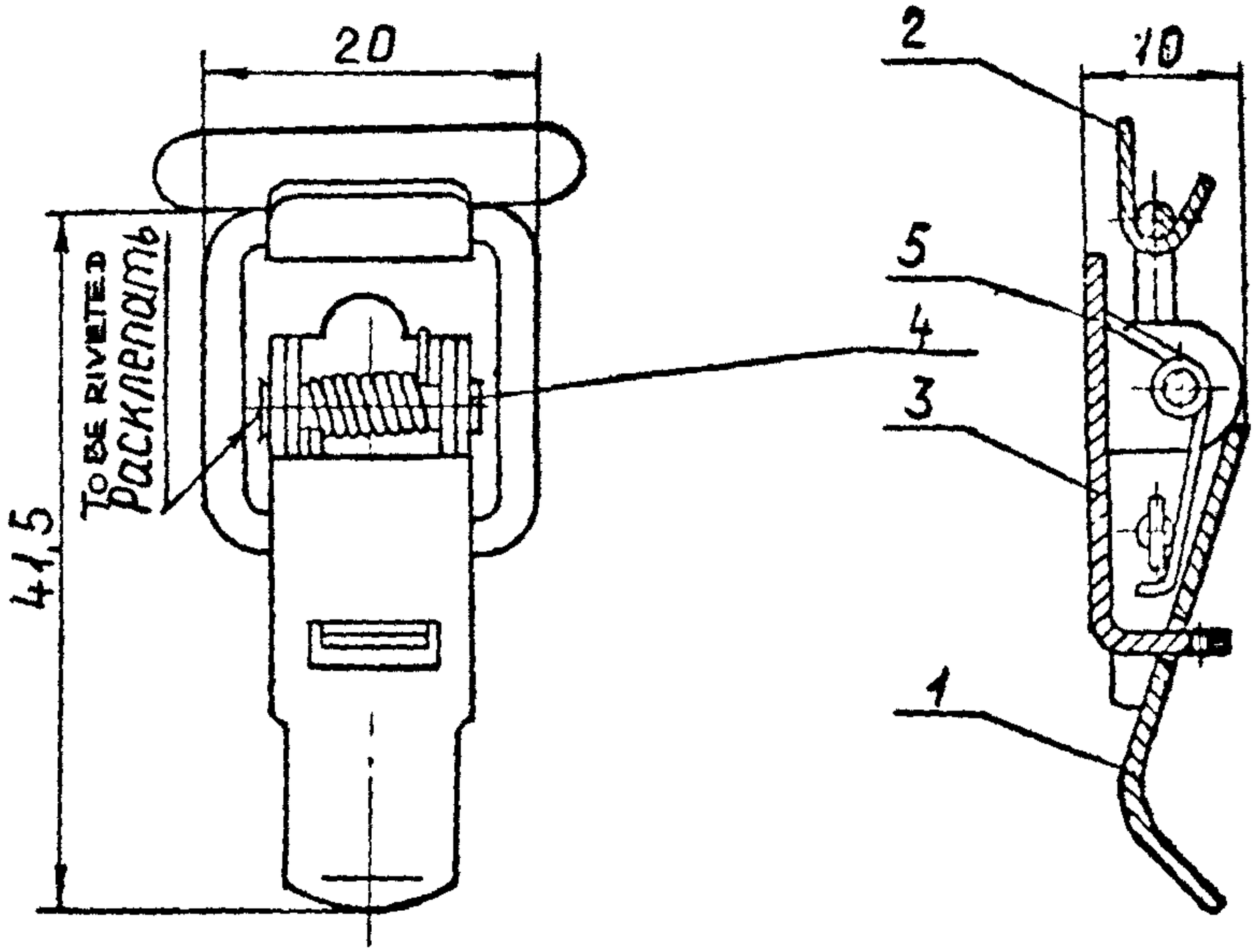

DIMENSIONS FOR REFERENCE.

(13)

			M28.59.316CB		A-3 / 13
	27.9.91	D.C.(1):-5503-I:- DRG. SEALED.	LOCK ASSEMBLY DRAWING.	SHEET	MASS	SCALE
M	7 8 89	D.C (1):-1330-I(P) DRG.PROV.SEALED		1 OF 1		2:1
ISSUE	DATE	REFERENCE				
APPROVED		2/5/85	MATERIAL:	HEAVY VEHICLES FACTORY AVADI		
CHECKED	M. Kumar	2/5/85				
DRAWN	P Mathew	30/4/85				

D.C (1):-1330-I(P), 5503-I.

M 28.59.316

Копировал

Формат 11

SIZE Формат	ZONE Зона	Поз. POS.	Обозначение PART NO.	Наименование NOMENCLATURE	Кол. QTY	Примечание REMARKS
				DOCUMENTATION Документация		
11			M28.59.316 СБ	ASSEMBLY DRAWING Сборочный чертеж		
				ASSEMBLY UNITS Сборочные единицы		
11		1	M28.75.607	CATCH WITH FRAME Защелка с рамкой	1	
				COMPONENTS Детали		
11		2	M25.86.015	Крючок HOOK	1	
11		3	M25.88.024	Основание BASE	1	
11		4	M26.42.103	Ось AXLE	1	
11		5	M27.74.001	Пружина SPRING	1	

AMENDMENTS.	SIG.	DATE
D.C.(I):-5503-I:- SCH. SEALED.		27.9.91
D.C (I).-1330-I(P) SCH PROV SEALED.		7.8.89.

D.C.(I)-1330-I(P)/5503-I.

AM	Sheet No. OF DOCUMENT	SIGNATURE	DATE
DESIGNER			
CHECKED BY			2/5/96
CHIEF OF DESIGN DEPARTMENT			
INSPECTOR			
APPROVED			2/5/96

M28.59.316

A-3 / 12

LOCK

LETTER	SHEET	No. OF SHEET
	1	1

HEAVY VEHICLES FACTORY
AVADI

M28.75.607 CB

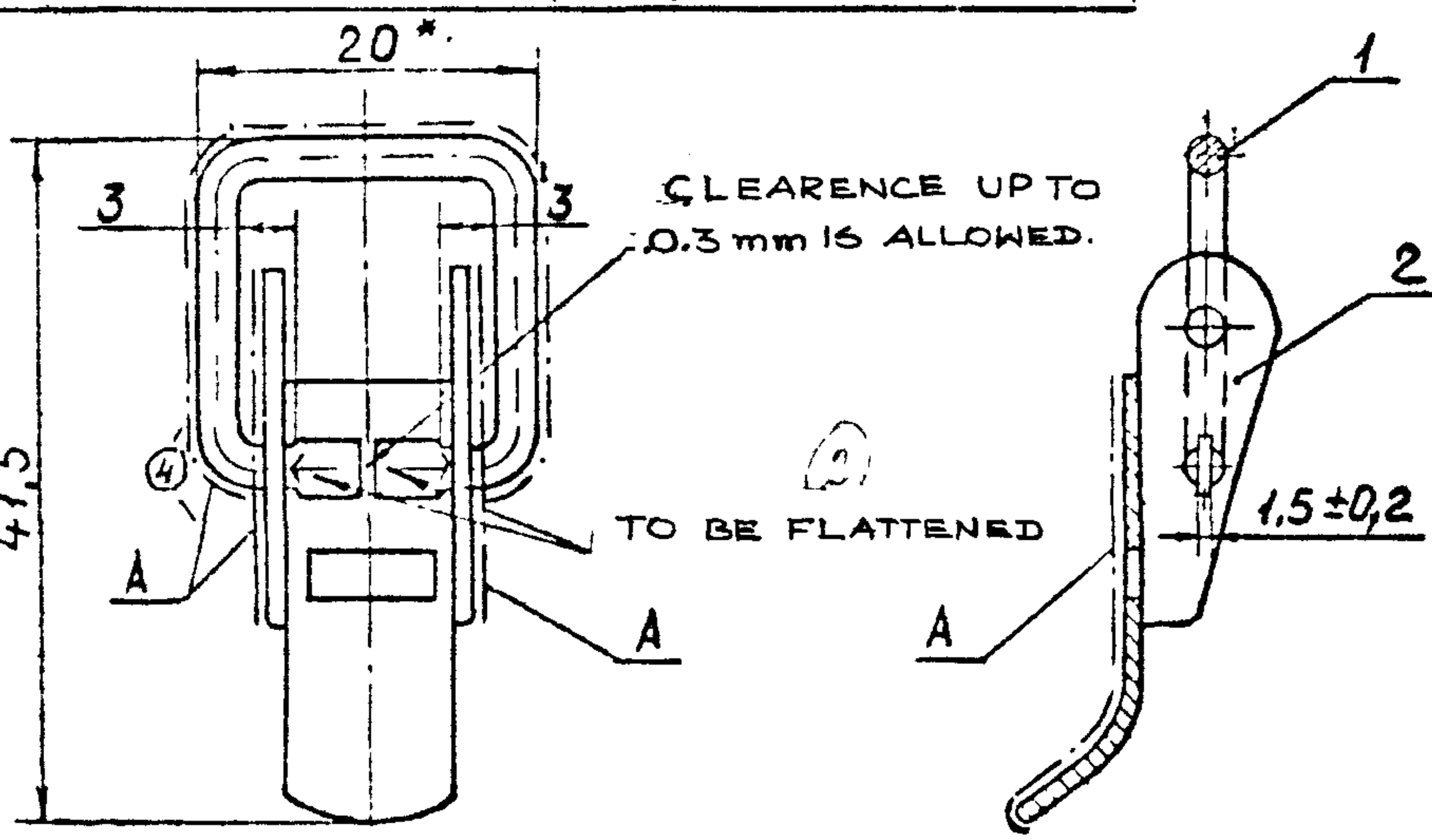

PART. NO	COATING.
M28.75.607	NO COATING
-01	Zn.15, CHROMATIZING.
-02	Ni 15, SURFACE A Ni 15 GLAZY
-03	Zn.9, CHROMATIZING, KHAKI ENAMEL ПФ-1426 GOST 6745-79 III C1
-04	Zn.9, CHROMATIZING BLACK ENAMEL XB-16 TY 6-10-1301-72 III C1

1*. DIMENSIONS FOR REFERENCE.

2. ROTATION OF COMPONENT 1 SHOULD BE SMOOTH AND FREE FROM JAMMINGS.

4 : 315 KB

ISSUE	DATE	REFERENCE
	27.9.91	D.C.(1):-5503-I'- DRG. SEALED.
16	7 8 89	D.C (1):-1330-I(P). DRG.PROV SEALED.

APPROVED		2/5/85
CHECKED	M. Kumaravel.	2/5/85
DRAWN	P Malbagh	30/4/85

M28.75.607 CB.

A-3 / 15

CATCH WITH FRAME ASSEMBLY DRAWING.

SHEET	MASS	SCALE
1 OF 1	0.007	2:1

MATERIAL:

HEAVY VEHICLES FACTORY AVADI

D.C (1):-1330-I(P),5503-I

Копировал

Перв. примен. | Справ. № | Подп. и дата | Инв. № дубл. | Взам. инв. №

Перв. примен.	Справ. №	Зона ZONE	Поз. POS.	ОБОЗНАЧЕНИЕ PART. NO	НАИМЕНОВАНИЕ NOMENCLATURE	Количество M28.75.607-										Примечание REMARKS.
						–	01	02	03	04						
					Документация DOCUMENTATION											
11				M28.75.607СБ	ASSEMBLY DRAWING Сборочный чертеж	X	X	X	X	X	X					
					COMPONENTS Детали											
11		1		M25.85.804	Рамка FRAME	1	1		1	1						
				-01 (1)				1								
11		2		M25 87.004	Защелка CATCH	1	1		1	1						
				-01 (1)				1								

Лит. LETTER

Усл. обозн. DESIGNER

D.C.(1):-5503-I:- SCH. SEALED		27.9.91		
D.C (1):-1330-I(P) SCH. PROV. SEALED.		7.8.89		
AMENDMENTS.	SIG.	DATE.		

ORIGINAL INSPECTORY SIGNATURE

AH	Sheet No.	No. OF DOCUMENT	SIGNATURE	DATE
DESIGNER				
CHECKED BY				2/5/85
CHIEF OF DEPA. DEPARTMENT				
INSPECTOR				
APPROVED				2/9/85

M28 75. 607.

A-3 / 14

CATCH WITH FRAME

LETTER	SHEET	No. OF SHEET
	1	1

HEAVY VEHICLES FACTORY AVADI

Φ21121 D.C (1):-1330-I(P), 5503-I.

3б Конверты СТПБШ0005027

*1) 3б1 Конверт для техдокументации паспорта, описания, формуляра

*1) 3.6. Envelopes

3.6.1. Envelope for technical documentation certificate, description, service log

*2) Development

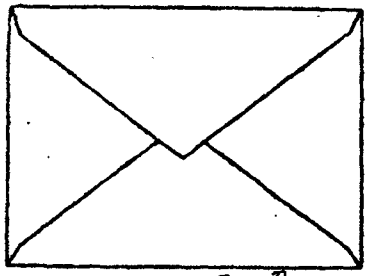

*2) Развертка

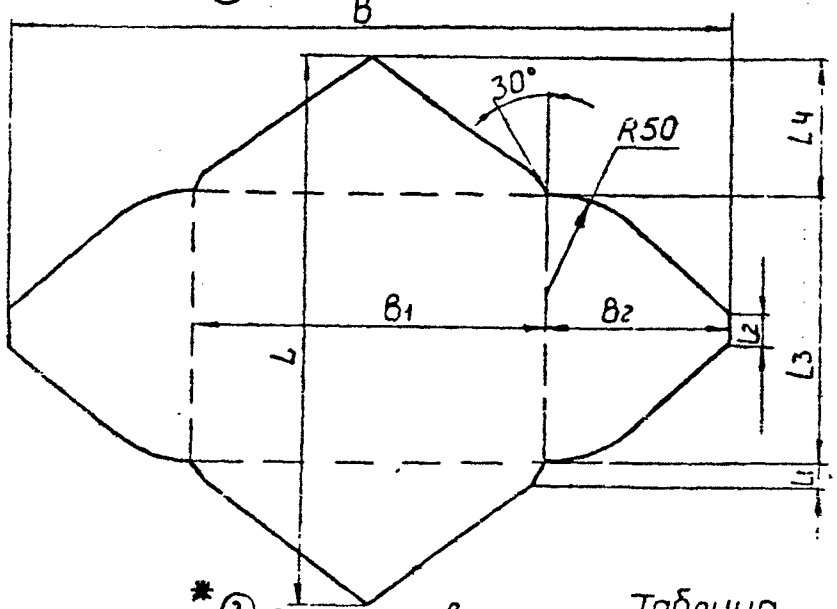

*3) Table

Sizes in mm

Designation	Sizes of envelopes								Remarks
	L	L_1	L_2	L_3	L_4	B	B_1	B_2	
СТПБШ8.865.028	356	15	20	166	95	470	230	120	

*4) Make the envelope from writing coloured paper.

*3) Размеры в мм

Таблица

Обозначение	Размеры конвертов								Примечание
	L	L1	L2	L3	L4	B	B1	B2	
СТПБШ8.865.028	356	15	20	166	95	470	230	120	

*4) Конверт изготовить из писчей цветной бумаги

D.C.I-6104-I.

D.C.(I)-1328-I(P), 6104-I.

D.C.I-6104-I. DRG.SEALED.		10.4.96
D.C.(I)-1328-I(P) DRG PROV. SEALED		7.8.89
AMENDMENTS	SIG	DATE

22/02/16

APPROVED		СТПБШ0.005.027	1/3
CHECKED			
CONTROLLERATE OF INSPECTION (ICV)	ENVELOPE	WEIGHT	SCALE
		SHT	SHTS

6W8 600 573

[redacted]

Rz 80 (✓)

6W6 103 008

[redacted]

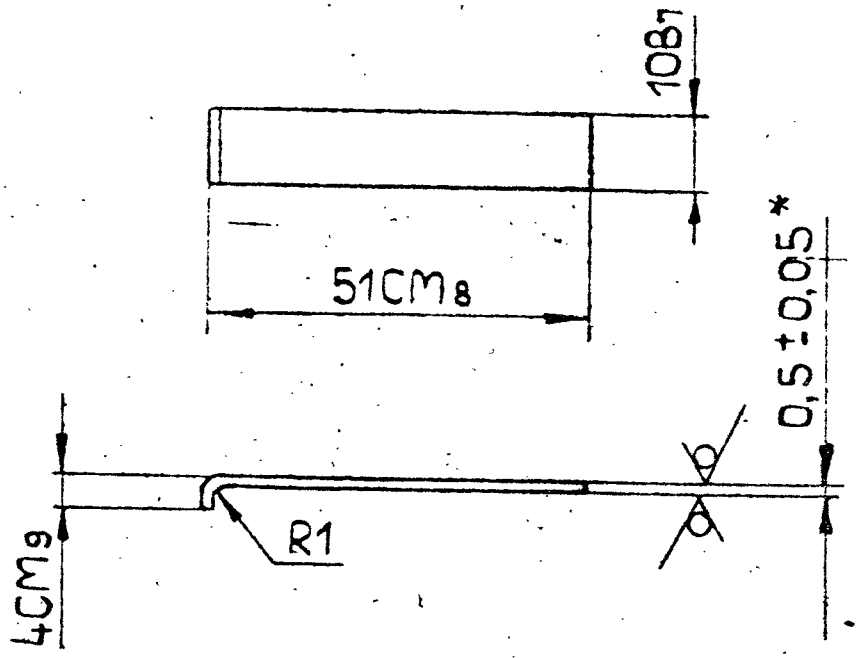

1. * Dimension is given for reference.

(a) CAT/PART No. V5/5330-379837

SHEET X/K Б 0.5 ГОСТ 19904-74.
II-H-10 КП ГОСТ 16523-70.

(a) D.C:- 6735-I. CAT/PT. No. ADDED.		24.11.04
D.C. (1):- 5503-I:- DRG. SEALED.		27.9.91
D.C. (1):-1329-I(P) DRG.PROV.SEALED		7.8.89
AMENDMENTS	SIG	DATE

D.C.(1):-1329-I(P), 5503-I, 6735-I.

A3

6W8.600.573.

SNO	SHT	DOC NO	SIGN	DATE
DRAWN		R.H.Prasad.		29.10.84
EDT/CHKD		B. Sarkar		7-11-84
F/M,DC.		S.R.Nair.		7.11.84
DIV.OFFR		T.K. BANERJEE		11.12.84
		NAME	SIGN	DATE

GASKET

SHEET	WEIGHT	SCALE.
A	0,00215	1:1

TOTAL SHEETS

ORDNANCE FACTORY PROJECT HYDERABAD

12

SIZE	ZONE	REF NO	PART. NO	NOMENCLATURE	
				DOCUMENTATION. Документация	
22			БШ6.103.007 СБ	ASSEMBLY DRAWING Сборочный чертеж	
				PARTS Детали	
12		1	БШ8.030.028	HALF OF HOUSING Половина корпуса	1
12		2	БШ8.030.029	HALF OF HOUSING Половина корпуса	1
11		3	БШ8 600.573	Прокладка GASKET	2

(8)

ALT	Sheet No.	No. OF DOCUMENT	SIGNATURE	DATE
DESIGNER				
CHECKED BY			m.Kim	2/5/91
REF OF DSN. DEPARTMENT				
INSPECTOR				
APPROVED				

БШ6.103.007.

F-2 / 8

HOUSING.

LETTER	SHEET	No. OF SHEET
	1	1

HEAVY VEHICLES FACTORY