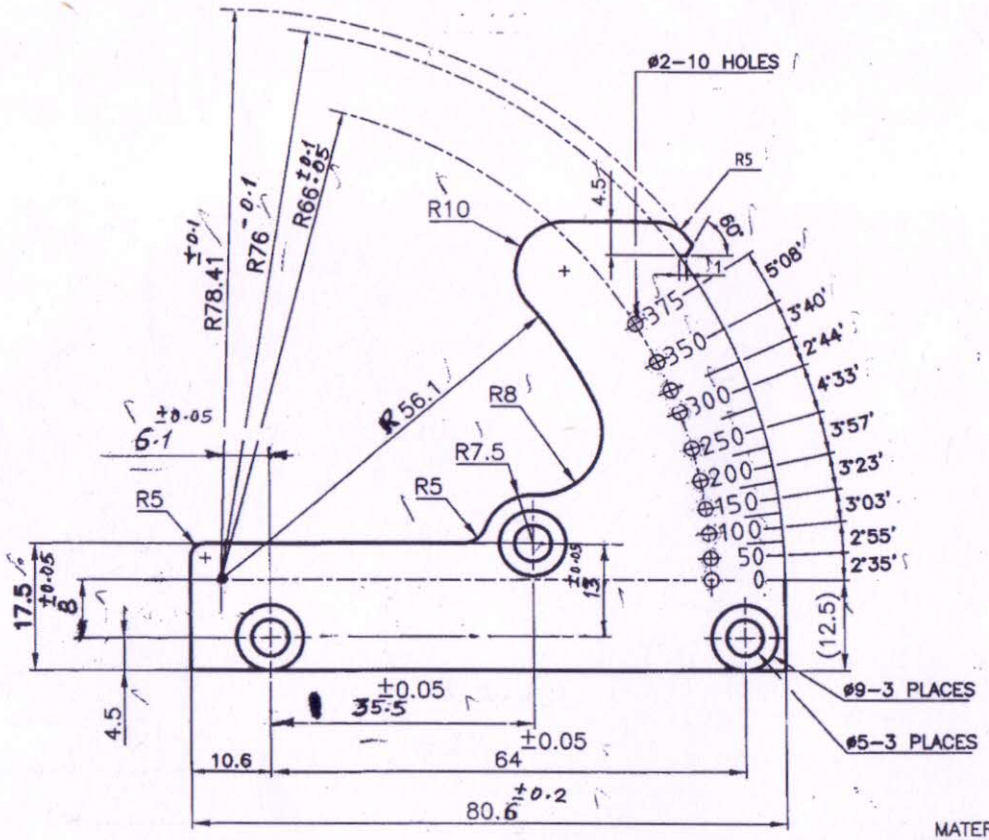


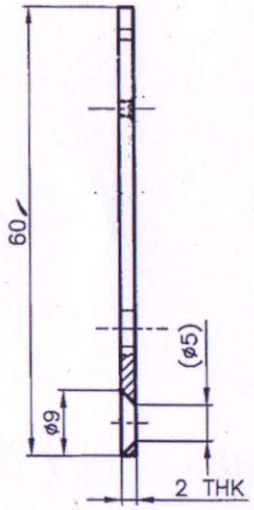


UN CONTROLLED COPY

CERTIFIED CORRECT COPY
OF APPROVED DRAWINGS
AT THIS DATE 22.7.18.....

Design & Drawing Office
Ordnance Factory,
Tiruchirappalli-620016.

MATERIAL :– IS: 2507– 1975, GRADE –1, DESIGNATION 45 C8.
(OR): BS 1449, PART–1, 1983, GRADE–CS 40 (OR) CS 50.
HARDNESS: 320 – 360 HV

NOTE:–

NUMBER AND ANGLE INDICATION LINES ARE TO BE ENGRAVED ON THE PLATE AS SHOWN IN THE DRG.
DEGREES MARKING NUMBER SIZE :– HEIGHT 2.5, WIDTH 1 AND DEPTH 0.25
AFTER PROTECTIVE FINISH, ENGRAVED NUMBERS AND ANGLES ARE TO BE FILLED WITH WHITE PAINT.

DIMENSIONS ARE IN mm.
UNTOLERATED DIMNS. AS PER IS : 2102 (MED)
SHARP CORNERS SHOULD BE BLUNT TO R 0.5
PROTECTIVE FINISH : PHOSPATED TO SPECIFICATION:
JSS : 0465–01–1988 CLASS–I (ACCELERATED) OIL FINISH.

| AMENDMENTS | SIG. & DATE |
|---|---|
| SL.NO-2 DA.No.015/17 Dt. 17.08.17 | |
| DA.No.011/17 Dt. 20/8/17 | |

| PART NO. | DESCRIPTIONS | NO OFF | MATERIAL | TREATMENT | REMARKS |
|---|---|---|---|---|---|
| | | | | | |

| | SIGNATURE & DATE. |
|---|---|
| TRACED | |
| DRAWN | |
| CHECKED | |
| HOS/D&DO | |
| NODAL OFFICER/ FOR MGL. | |
| OFFICER/ D&DO | |
| APPROVED ON. 25/02/2015 | |

SUB: RANGE PLATE L/H
FOR: SIGHT ASSY GROUP
OF : 40 mm MGL
DES.REF.NO.
DRG. No.: 30P 4008*2

ORDNANCE FACTORY
TIRUCHIRAPPALLI–16.

SCALE NTS
STORE DRG.NO.
OPERATION NO.
SHEETS: 1
SHEET No.: 1