DRG.- CONVENTIONS CONFORM TO IS: SPECIFICATIONS.
DIMS ARE IN mm. UNLESS OTHERWISE STATED.

PART NO.

DC 36552-A

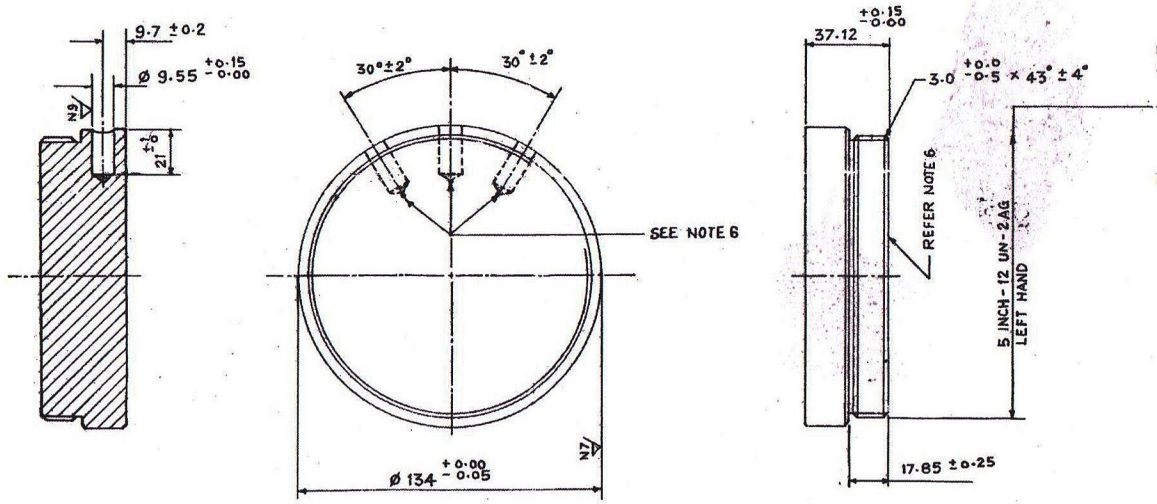

MAJ. DIA. 126.95 MAX
EFF. DIA. 125.58 MAX
} AFTER COATING

MAJ. DIA. 126.92 SPL
126.63 SPL
EFF. DIA. 125.~~58~~ SPL
125.38 SPL
} BEFORE COATING

NOTE :-

1. MATL. WROUGHT STEEL B17 M40 [EN 24] TO SPEC. B.S. 970 : PART. 1 : 1983.
2. HEAT TREAT TO CONDITION "V"
3. SURFACE TREATMENT : ZINC PLATE TO SPEC. B.S. 1706 : 1960 CLASS B. AND PASSIVATE TO SPEC. DEF. 130 AMDT 1.
4. DIMENSIONS APPLY BEFORE SURFACE TREATMENT, UNLESS OTHERWISE STATED.
5. SURFACE TEXTURE : N9 ALL OVER UNLESS OTHERWISE STATED.
6. MARK THE LOCATION OF THE 3 IMBALANCE PIN HOLES ON THE FACE OF THE THREADED SIDE WITH A CENTRE PUNCH AS SHOWN.

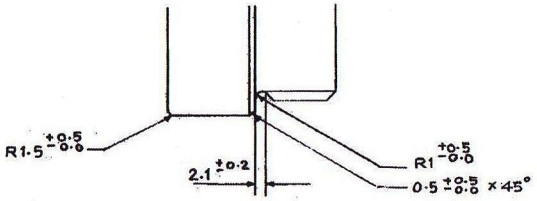

ENLARGED DETAIL OF U/CUT & THREAD LENGTH

48 प्रारे डिजाइन ऑफिस,
आयुध निर्माणी कानपुर द्वारा दी गई है
THIS COPY ISSUED BY
DESIGN OFFICE
ORD FY. KANPUR
दिनांक 12 मार्च 2019
DATE
क.का.प्र./डी.ओ.
KKMDO

R. NO.	DATE	AUTHORITY	REVISION	ZONE	AHSP SIG.	D.O.
	24-4-99	DC 36552-A	DRG. SEALED (PROV)			

DRG. SEALED:- 24-4-99 (PROV)

DRN:- | TRD:- Raut | CHD:- | TRNCHD.
C.D'MAN | O I/C D.O.
APPD. | FOR CQA(A)
SCALE:- NOT TO SCALE
EST. MASS:-
GAUGE SCHD:-
DATE:-
MATL:- AS ABOVE NOTE 1 REFER
PROTECTIVE FINISH:- SEE NOTE 3

ISSUE - NO 1

ASSY. DRG. 2440A04001

DESIGNER'S REF. 2440A10002

PART NO.

D.S. CAT NO.

AHSP:- CQA(A) KIRKEE

ADAPTOR, BOAT - TAIL