ASHOK LEYLAND

FIRST ANGLE PROJECTION

SURFACE FINISH AS PER IS:3073(CLA VALUE)

MICRO INCHES	MICROMETRES
BELOW 0.2	BELOW 8
0.2–0.4	8–16
0.4–0.8	16–32
0.8–1.6	32–64
1.6–3.2	64–125
3.2–6.4	125–250

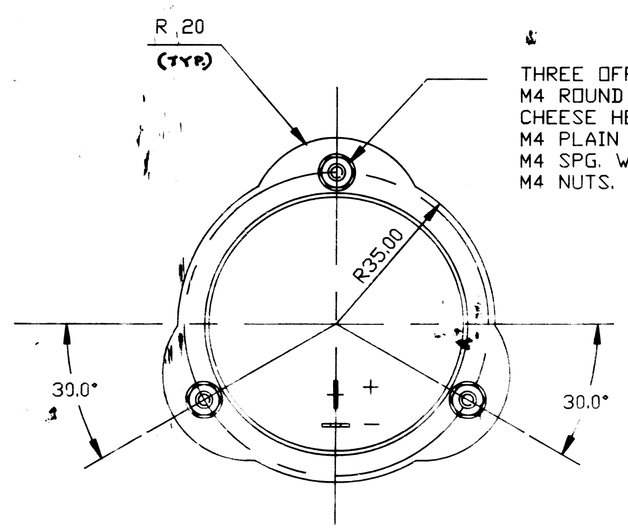

THREE OFF:
M4 ROUND HEAD SLOTTED CHEESE HEAD SCREWS,
M4 PLAIN WASHERS,
M4 SPG. WASHERS,
M4 NUTS.

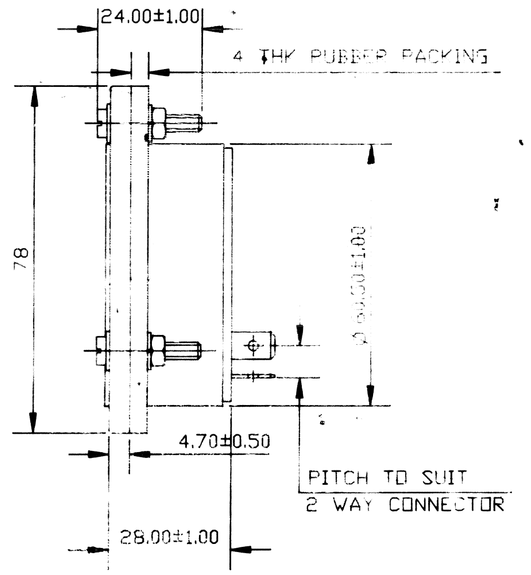

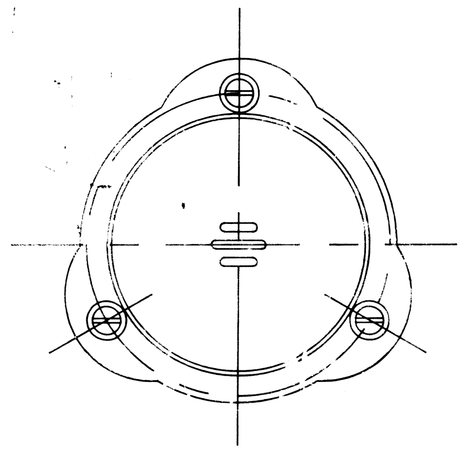

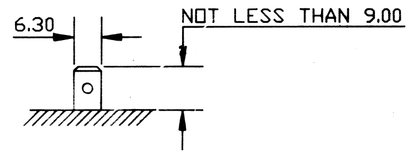

LUCAR TERMINAL DETAIL

VFJ

PART NO.	F	7	8	5	8	7	0	0	A

ALTERATIONS

NOTE: NOMINAL VOLTAGE 24 VOLTS DC & OPERATING RANGE 10 VOLTS TO 30 VOLTS AND THIS BEEPER IS COMMON FOR BOTH 12 AND 24 VOLTS. ADDED TEST SPECIFICATIONS ADDED

This design is strictly private and confidential. It is the exclusive property of Ashok Leyland Ltd and must not be used, copied or reproduced in part or whole without the Company's written permission.

ASHOK LEYLAND LTD.
ENNORE MADRAS

1 (A) TEST SPECIFICATIONS

1. Visual Examination and Dimension check:
There should not be any damages, flaws and other defects to be observed in finish and workmanship. Dimensions shall be as per drawing.

2. Performance test:
a) Sound pressure level test: When the DC voltage of 13.5 V applied to the beeper, the beeping frequency should be minimum of 300 beeps/minute.
The sound pressure level should be minimum 80 dB(A) at 20 Cm. from grill and minimum 100 dB(A) at grill.
The sound output should not show cracking sound or other similar defects.

b) Minimum Wattage consumption test: The wattage consumed should not exceed 1 Watt and a good clear tone of sound should be emitted when 13.5 V applied.

c) Operating voltage test: The beeper should operate satisfactorily at ambient temperature with good clear tone of each point, and also the wattage consumed should not exceed 1 watt when the beeper is operated between 10 to 30 V at the interval of 1 volt and at each step for one minute.

3. High voltage (flash) test:
When 440 V/AC and frequency between 40 - 60 Hz is applied for one minute between terminal and bodies of the dismantled sub assemblies of the beeper, there should not be any arcing or puncturing of insulation.

4. Insulation resistance test:
When 500 V/DC is applied for one minute between one terminal and mounting screw of the beeper, the insulation resistance should not be less than 1 Megaohm.

5. Reverse polarity test:
When the DC voltage of 28 V is applied with reversed polarity for one minute and then the sound pressure level checked for it should be min.80 dB(A) at 20 Cm from grill and min.100 dB(A) at grill and the sound output should not show cracking or similar other defects.
The wattage consumed should not exceed 1 watt and a good clear tone of sound should be emitted.

6. Vibration test:
The sample should be vibrated as per IS 9000-1981(Part VIII) at a frequency of 10-55-10Hz & amplitude of 1.5 mm for 24 min. at the rate of 5 mins. each axis and in the beeper should be operated for 1 minute every half an hour during the tests. No obvious damage/failure should occur in any part. Beeper should satisfy the tests specified in sl.nos.2 to 5. The sound pressure level should not be reduced by more than 5 dB from the initial value.

7. Damp heat (Cyclic) test:
The beeper is to be tested as per IS 9000-1981(part V/sec1) and kept in a test chamber maintained at 40°C, 95% RH for 8 hours and then taken out and kept for 16 hours outside the chamber. During the test, the beeper should be operated for 5 minutes every 15 minutes. The cycle is to be repeated for 7 times. After 24 hours recovery period the beeper should be checked and it should satisfy the tests specified in sl.nos.2 to 5. The sound pressure level should not be reduced by more than 5 dB from the initial value.

8. Dry Heat test:
The beeper is to be tested as per IS 9000-1981(Part III/sec1 to 5) and kept at 85±2°C for 2 hours duration and operated every half an hour for one minute. After the test the beeper should satisfy the tests specified in sl.nos.2 to 5. The sound pressure level should not be reduced by more than 5 dB from the initial value.

9. Cold test:
The beeper is to be tested as per IS 9000-1981(Part II/sec 1 to 4) and kept at -10±3°C for 2 hours and operated every half an hour for one minute. After the test, the beeper should satisfy the tests specified in sl.nos.2 to 5. The sound pressure level should not be reduced by more than 5 dB from the initial value.

10. Endurance test
The beeper should be operated for 480 hours as follows: 14 minutes ON and 1 minute OFF at 13.5 V. After the test the beeper should not show any mechanical failure inside and should satisfy the tests specified in sl.nos.2 to 5. The sound pressure level should not be reduced by more than 5 dB from the initial value.

11. Dust test:
The beeper should be subjected to dust test. After the test the beeper should satisfy the tests specified in the sl. nos. 2 to 5 as per IS 9000 (Part XIII) Cl. 4.8

12. Corrosion resistance test:
Duration of testing 150 hours, consisting of 6 cycles each 24 hours exposure with 1 hour drain period. After the test the beeper should satisfy the tests specified in the sl.nos.2 to 5. AS PER ELECTRONICS TEST & DEVELOPMENT CENTRE SPEC NO. 75005

13. Resistance to cleaning solvents and performance of marking:
The beeper should be wiped with a swap of cotton dipped in fluids (a) NC thinner
(b) Engine oil
(c) Brake oil
and (d) Diesel oil, as per IS 9000-1981 (part XX).
At the end of the test, the surface should not be affected.

Driving Rain test:
The beeper is to be tested as per IS 9000 (Part XVI), during the test of 2 hours, the beeper is to be operated for one minute for every half an hour.
After the test the beeper should satisfy the tests specified in sl.nos.2 to 5. The sound pressure level should not be reduced by more than 5 dB from the initial value.

14. Repeated free fall test:
The beeper is to be tested as per IS 9000 (Part VII/sec 5), free fall of 10 falls from a height of 1000mm. After the test the beeper should satisfy the tests specified in sl.no 2 to 5

NOTE:
1. NOMINAL VOLTAGE 24 VOLTS DC
OPERATING RANGE 10 VOLTS TO 30 VOLTS
THIS BEEPER IS COMMON FOR BOTH 12 AND 24 VOLTS.
2. MINIMUM SOUND LEVEL AT GRILL: 100dB A
AT 13.5 VOLTS.
3. NOMINAL WATTAGE: BELOW 1 WATT AT 13.5 VOLTS.
4. CASING MATERIAL: ABS
5. LUCAR TERMINAL: TIN PLATED TO IS:8395(PART1)-1977 TABLE1
6. NUMBER OF BEEPS/MINUTE: 300 MINIMUM
7. RUBBER PACKING MATERIAL SPEC TO
SAE J2 [illegible] AM4
[illegible] IS: 3063-1972
9. [illegible] IS: 1367(PART 3) - 1991
[illegible] IS: 1367 (PART VI) - 1980
11. PLAIN WASHER [illegible] 98 G 'O'
[illegible] SCREW NUT PLAIN WASHER AND SPRING WASHER TO BE ZINC PLATED AND YELLOW CHRAMATE PASSIVATED [illegible] THICKNESS 17 MICRONS.
13. HYDROGEN EMBRITTLEMENT RELIEF TREATMENT SHOULD BE CARRIED [illegible] SPRING WASHER IMMEDIATELY [illegible] HEATING TO [illegible]
14. [illegible]
A [illegible] 4

STAGE	CHECKED / DATE	APPROVED / DATE	ALTERATION LEVEL
I			
II			
III	[illegible]	[illegible]	

DRAWN / DATE	KRN 030394	RETRACED / CHECKED	
CHECKED / DATE	[illegible]	MGD APPROVAL / DATE	[illegible]
APPROVED / DATE	[illegible]	STDS APPROVAL / DATE	[illegible]

MATERIAL: REF. DRAWING

HEAT TREATMENT: ----

FINANCE: CAD LOCK AND REVERSE ALARM

DESCRIPTION: BEEPER ALARM ASSEMBLY

PART NO.: F 7 8 5 8 7 0 0 A

SHEET NO.: [illegible]

UNLESS OTHERWISE SPECIFIED

SURFACE PROTECTION: FABRICATED COMPONENTS TO BE PHOSPHATED TO CLASS 'D' AS PER IS:3618 AND APPLIED IMMEDIATELY WITH RED OXIDE ZINC CHROMATE PRIMER TO IS:2074. MACHINED SURFACE TO BE APPLIED WITH RUST PREVENTIVE OIL TO IS:1654

MACHINING TOLERANCE FOR OPEN DIMENSIONS WILL BE AS PER IS:2102

DIMN.	OVER	-	6	30	120	315	1000	2000	>4000
	UPTO&INCL	6	30	120	315	1000	2000	4000	
TOLERANCE		±0.1	±0.2	±0.5	±1	±1.5	±2	±3	±4

SHARP EDGES TO BE REMOVED. DO NOT SCALE DRG. DIMENSIONS ARE IN MM. UNLESS OTHERWISE SPECIFIED TOLERANCE AS PER IS:2102

SCREW THREADS SHALL CONFORM TO THE LIMITS AND TOLERANCES SPECIFIED IN THE CURRENT IS:4218 CLASS 6g EXTERNAL & 6H INTERNAL

SPECIAL INSTRUCTIONS/NOTE:

S.L.No.	PART NO.	DESCRIPTION	MATERIAL	QTY

BILL OF MATERIALS

REF.PT.NO.	---	ISSUED UNDER		MICRO FILMED	
SUPERSEDES		EDM/BMM	DATE	BY	
S/A.PT.NO.	---	7666	250594	DATE	
WEIGHT	ROUGH / FINISH	SUPPLIER'S DRAWING APPROVAL REQUIRED	YES ✓	NO	
SCALE	1:1	APPROVAL NO.:			
SPEC.NO.	[illegible]	TESTING STD.:	REFER DRAWING		