D.S. CAT No/ PART No	DRAWING CONVENTION CONFORM TO IS:696 DIMENSIONS ARE IN mm UNLESS OTHERWISE STATED
IRCL 494	

LIST OF COMPONENTS

ITEM No	DESCRIPTION	PART No	DESIGNERS REF	No PER SET
1	BODY	ISV 144 SA	CIA/AMN/2010 DET-1	2
2	LID ASSEMBLY	ISV 145 SA	CIA/AMN/2010 DET-2	2
3	SHOCK ABSORBER ASSEMBLY 'B' (FOR PACKING TPT ROUND)	ISV147 SA	CIA/AMN/2010 DET-7	1
4	HANDLE CARRYING	ISV176 SA	CIA/AMN/2162	1
5	STEEL RIVET 4 X 4·2 TO SPEC IS: 2998 GALVANISED 12 μ m AND CHROMATED GREEN			2
6	REAR SUPPORT	ISV1580	CIA/AMN/2010 DET-5	2
7	FRONT SUPPORT	ISV1581	CIA/AMN/2010 DET-6	2
8	O RING	ISV1664	CIA/AMN/-2257	2
9	STEEL RIVET 4 X 50 TO SPEC IS: 2998 GALVANISED 12 μ m & CHROMATED GREEN			2
10	CIRCLIP C 4 X 0·7 STEEL IS 3074 GALVANISED 12 μ m. AND CHROMATED GREEN			4

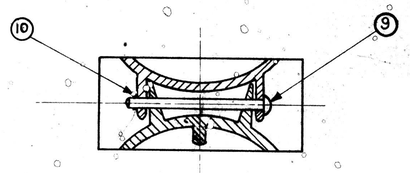

SECTION A-A

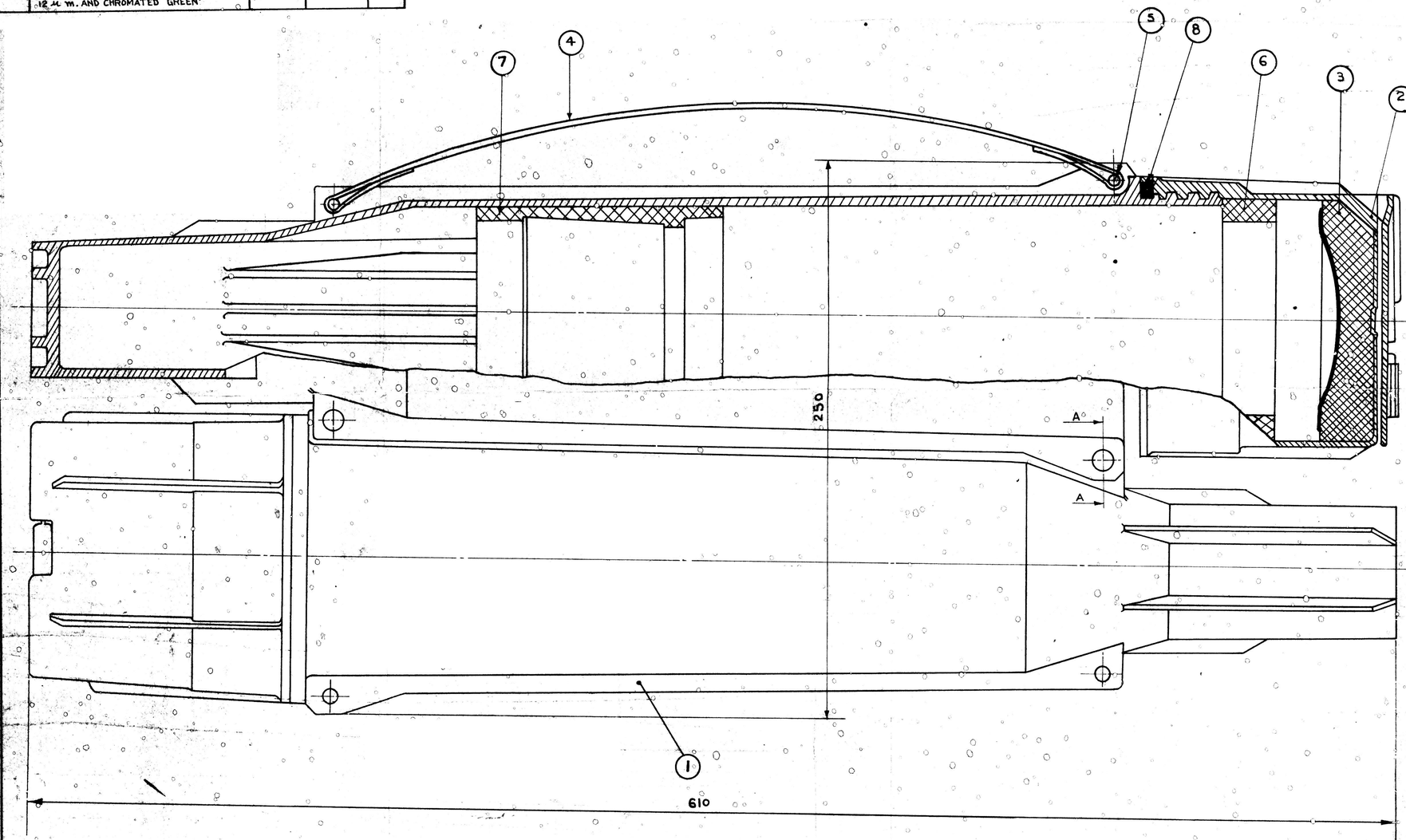

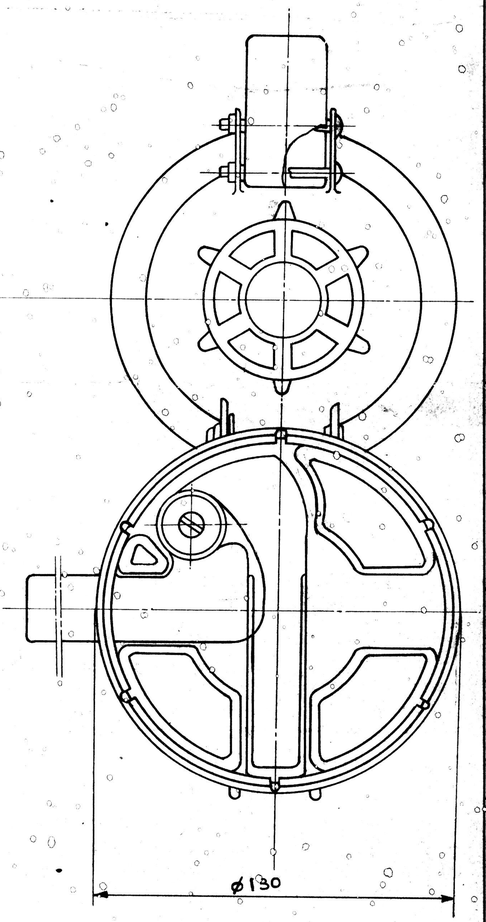

NOTES:- FINISH PRODUCT TO SPECN CIA 2804
BASED ON DRG No ISV 470 A

DATE	AUTHORITY	ZONE	NATURE	SIG AHSP	SIG DO
20 12 83	188-34-W		HINDI NOMEN ADDED		
29-6-85			CLOTH NEGATIVE PREPARED		

AMENDMENTS

DRG SEALED :- PROV - 164-02-W 27-6-86 DO CI(W)

DRAWN :- CHD :- ASSY DRG:-
TRACED:- R.R.VAGH CHD :- DATE :-
SCALE :- 1:1
C/ O'MAN DO AHSP FOR CI(W) EST MASS:-
MATERIAL :-
PROTECTIVE FINISH :-

CI(W) JABALPUR

DESIGN No CI/WPN/655

PART No IRCL 494

D.S.CAT No

टयून कन्टेनर एसेम्बली (विदाउट लेबल)

TWIN CONTAINER ASSEMBLY (WITHOUT LABLE)

FOR SUB CALIBRE. ADAPTER 219·9 m.m.