DS CAT No.

1015-003201

DRG. CONVENTIONS CONFORM TO IS : 696
DIMENSIONS ARE IN mm UNLESS OTHERWISE STATED

TOLERANCES FOR UNTOLERANCED LINEAR DIMENSIONS

ABOVE UP TO	– 6	6 30	30 120	120 315	315 1000	1000 2000	2000 4000	4000 –
TOLS	± 0.1	± 0.2	±0.3	± 0.5	± 0.8	± 1.2	± 2	± 3

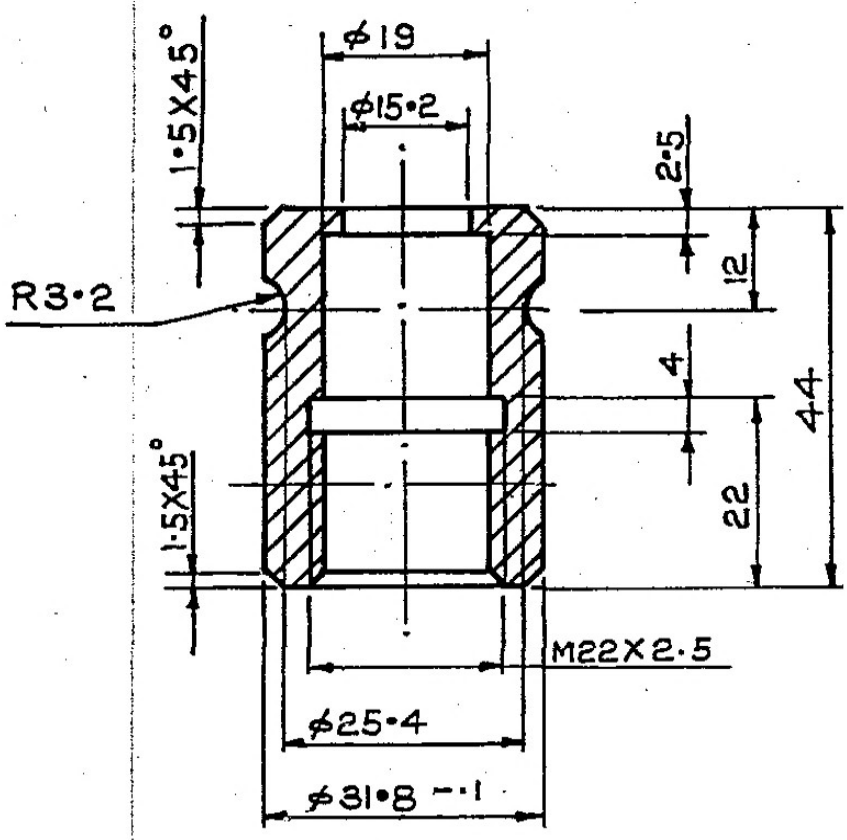

NOTE :- THREAD CONFORM TO IS:4218
UNTOLERANCED HOLE +0.2

PROTECTIVE FINISH :- PHOSPHATED TO SPEC JSS:0465-01:1988, CLASS II FINISH (j)

DATE	AUTH	ZONE	AMENDMENTS	SIG AHSP	SIG DO
3·3·07			SCANNED & PRINTED WITHOUT CHANGE		

PREV DC Nos:- 17827-W, 18825-W, 18844-W Dt.03-01-04

DRG SEALED:- 18844-W DT. 03-0-1-04 DO CQA(W)

SCALE :- 1 : 1 | ESTD mass | DATE :-

MATERIAL :- IS : 5517-1978, 40 C8, ROLLED & ANNEALED

PROT FINISH :-

CAP कैप

CQA(W) JABALPUR

DRN | CHD

SCANNED :- MK | CHD :- A K Jha

APPROVED DO | AHSP FOR CQAW

ASSY DRG. 1015-003216

DESIGN No. ILG 152

PART No IFL - 8060

DS CAT No. 1015-003201