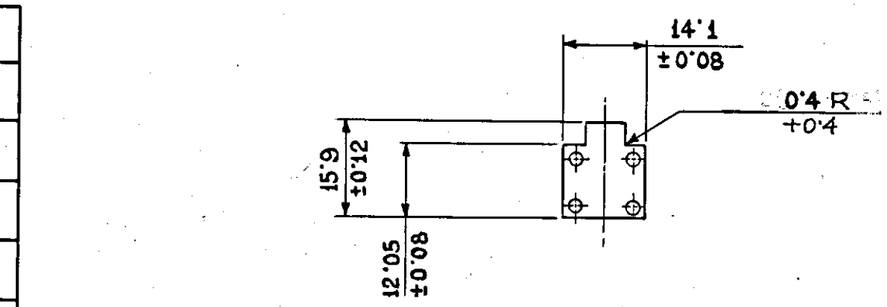

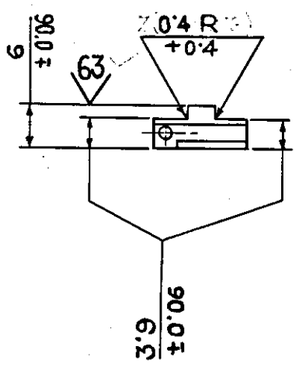

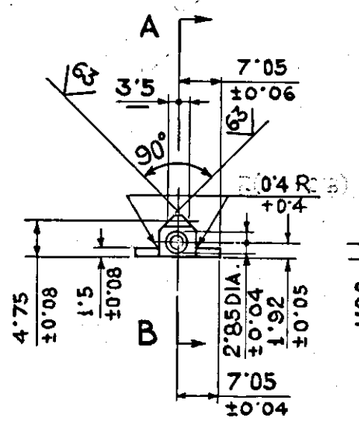

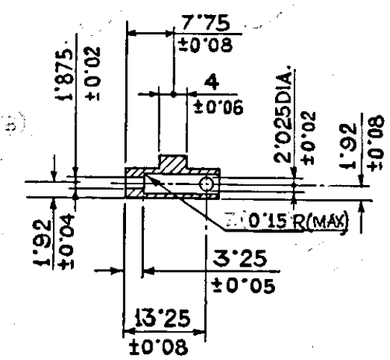

SECTION-AB

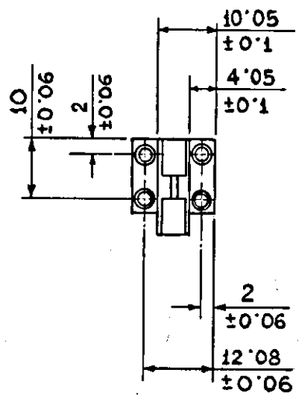

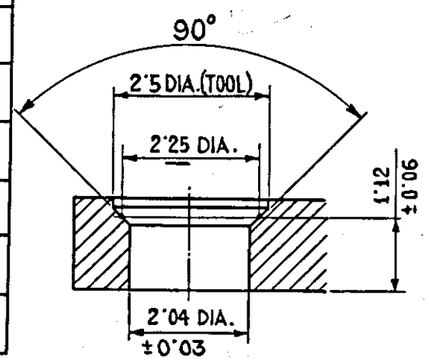

ENLARGED VIEW OF THE HOLES.

SCALE :- 10:1

63 TO 160 FOR BORINGS.

160

MATERIAL :-

BS 970 PT.3 :1991 Gr. 070 M 55

HEAT TREATMENT :-

ANNEALED AT 680°C

AUTHY.	DATE	ZONE	BRIEF RECORD	SIG.
25292-SA	14-03-2002		RECORD OF RECEIPT CANCELLED AND DRG. SEALED AFRESH	JSO
23307-SA	5-4-96		SYMBOL/DIMENSION & MATL AMENDED	DAC
21701-SA	9.4.92		D S CAT No. ADDED IN ASSY. COLUMN.	LT. COL
20857-SA	19.6.90		CL. NEG. RETRACED & DRG. RESEALED AS A RECORD OF RECEIPT	JSO
			PREVIOUS D.C.(I) NOS. 15579-SA, 16593-SA, 18059-SA & 19765-SA.	COPY

	DATE	NAME
DGN.		
DRN.		
CHD.		
TRD.	20.3.90	S. GHOSH.
COMP.	9-6-90	Kondal.

I/C; D.O.

SCALE :- 1:1, 10:1

SEALED :- D.C. NO. 25292-SA. DT. 14-03-2002.

SUB-ASSY D S CAT. No.:- 1005-006832

MATERIAL :- AS STATED.

DIMENSIONS ARE IN MILLIMETRES.

BODY, CATCH

CQA(SA) ICHAPUR

APPROVED. DT.

CL. NEG. RE-TRACED

DRG. NO. A2061

PART NO. 84BA

DS. CAT. NO. 1005-000441