**DRG. PREPARED AS PER PLNG (TS) SEC. MEMO NO. 107 / 050 / PLNG (TS) /18-19 Dt. 08/08/2018

DRG. NO. CO-525

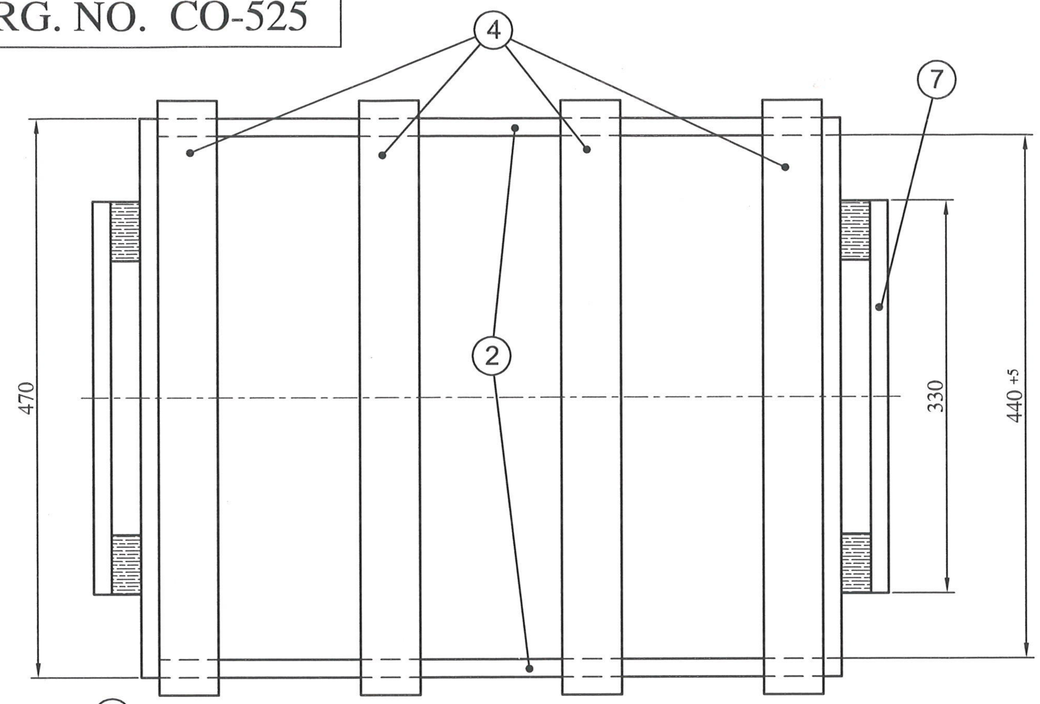

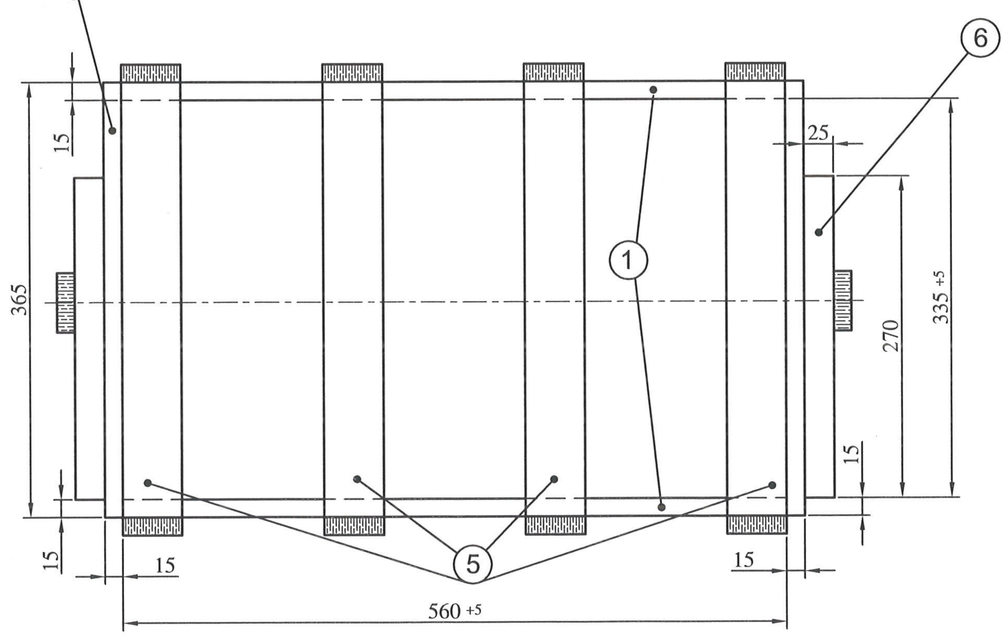

LIST OF PARTS

ITEM NO.	NO. OFF	DESCRIPTION	LENGTH	WIDTH	THICKNESS
1	2	TOP & BOTTOM PLANK	560	470	15
2	2	FRONT & REAR PLANK	560	365	15
3	2	SIDE PLANK	470	365	15
4	8	TOP & BOTTOM BATTEN	500	50	15
5	8	FRONT & REAR BATTEN	365	50	15
6	4	END BATTEN	270	25	15
7	6	HANDLE	330	50	15

NOTE :-

1) ALL WOODEN MEMBERS EXCEPT THE TOP PLANK SHOULD BE FIXED WITH SUITABLE NAILS AT 75mm. INTERVALS.
2) THE TOP PLANK SHOULD BE SCREWED UP WITH SUITABLE WOOD SCREWS.
3) COMPONENT SHOULD BE GREASED & WRAPPED WITH WATER-PROOF PAPER PROPERLY BEFORE PACKING.
4) IN CASE OF TRADE FIRM SUPPLY, SAMPLE 2 OR 3 NOS. ARE TO BE SUBMITTED FOR INSPECTION BEFORE BULK SUPPLY.

MATL. :- GURJAN WOOD / MANGO WOOD

INT. DIMN. OF WOODEN PACKING BOX
- 560mm.X440mm.X335mm.

USED WITH LOWER & UPPER SEPARATOR,
DRG.NO. CO-526

1	1	AS STATED	PACKING BOX	
ITEM NO.	NO. OFF	MATERIAL	DESCRIPTION	
LIST OF PARTS				
		SCHEDULE NO :–	COMPT.:– DUMMY CARTRIDGE (NASK 1096)	STORE DRG NO. AK-630M NAVAL GUN
		SCALE :–1:5 / PROJECTION THIRD ANGLE		
		DRAWN BY : 31/08/2018	WOODEN PACKING BOX (FOR 63 NOS. DUMMY CARTRIDGE)	
		TRACED BY :		
		CHECKED BY : 31/09/18	DRG. NO. :– CO-525	
		APPROVED BY :		
DT.&SG.	DESCRIPTION	CONCURRED BY: JWM / GUNA	M / C :	NO. OF SHT.:–1
AMENDMENTS		SIGN. 3/9 / DATE :	G. & S. FY. COSSIPORE.	SHT. NO. :–1

**DRG. PREPARED AS PER PLNG (TS) SEC. MEMO NO. 107 / 050 / PLNG (TS) /18-19 Dt. 08/08/2018

DRG. NO. CO-526

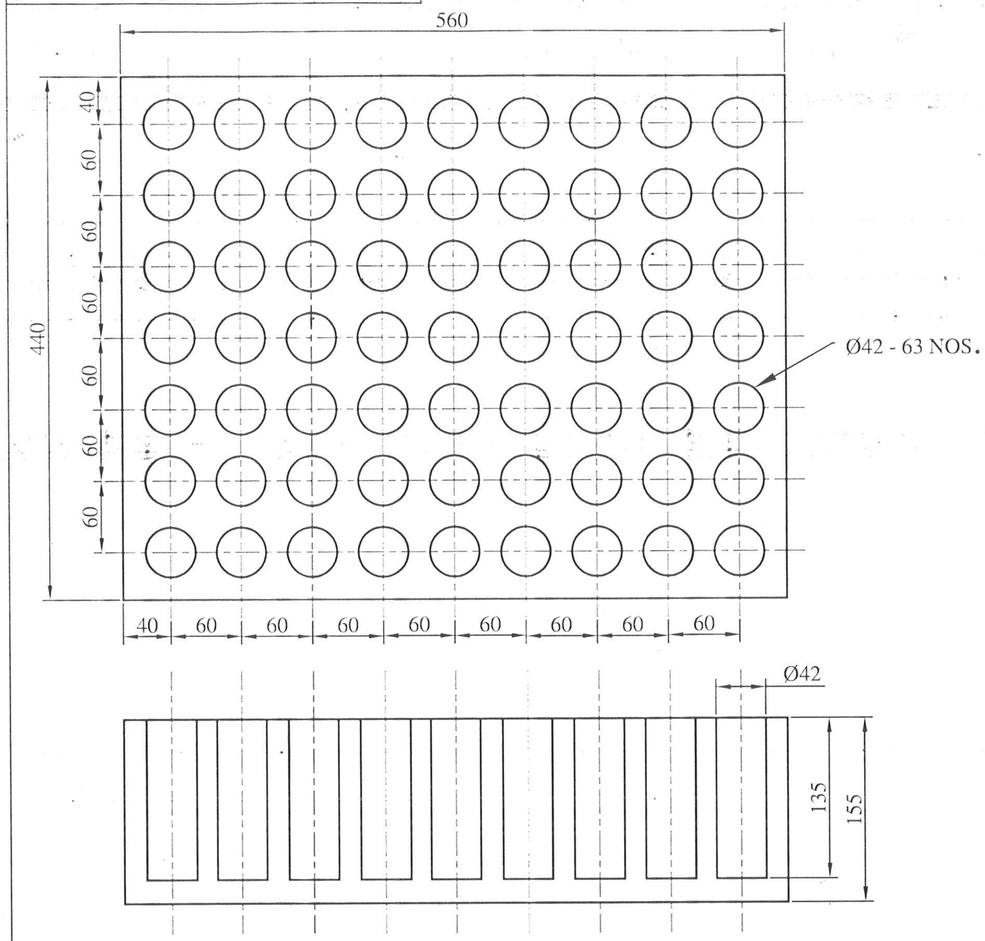

LOWER PART

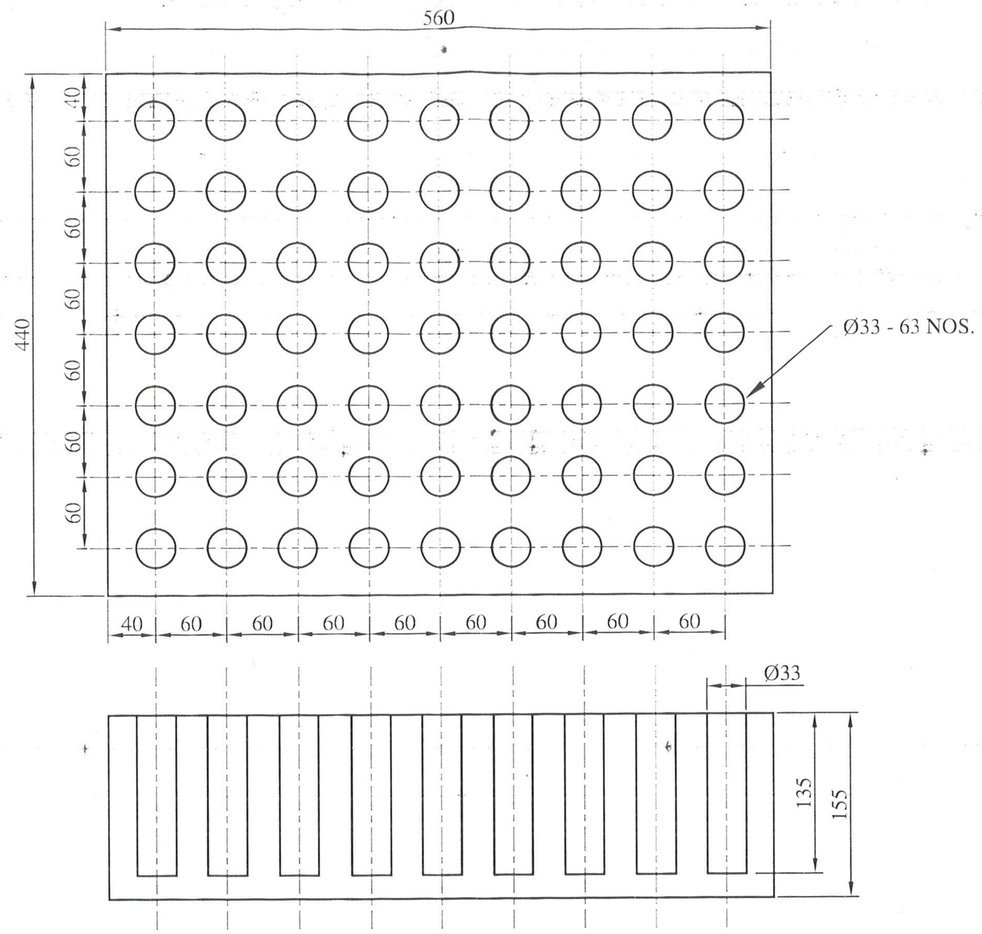

UPPER PART

ITEM NO.	NO. OFF	MATERIAL	DESCRIPTION
1	1	AS STATED	PACKING BOX

LIST OF PARTS

MATL. :- POLYURETHANE FOAM

EXPANDED P.E. FOAM WITH DENSITY OF 20-35 Kg/m^3 HAVING TENSILE STRENGTH OF 1.5-3.5 Kgf/cm^2. (TRANSVERSE DIRECTION), 2.5-5.0 Kgf/cm^2. (MACHINE DIRECTION) AS PER IS : 7888.

USED WITH WOODEN PACKING BOX, DRG.NO. CO-525

		SCHEDULE NO :–	COMPT.:– DUMMY CARTRIDGE (NASK 1096)
		SCALE :–1:5 / PROJECTION THIRD ANGLE	STORE DRG NO. AK-630M NAVAL GUN
		DRAWN BY : 31/08/2018	LOWER & UPPER SEPARATOR (FOR 63 NOS. DUMMY CARTRIDGE)
		TRACED BY :	
		CHECKED BY : 1/9/18	DRG. NO. :– CO-526
		APPROVED BY :	
DT.&SG.	DESCRIPTION	CONCURRED BY: JWM/GUNA	M / C : / NO. OF SHT.:–1
AMENDMENTS		SIGN. / DATE : 2/9	G. & S. FY. COSSIPORE. / SHT. NO. :–1