765-71-29

Rz 80 (√)

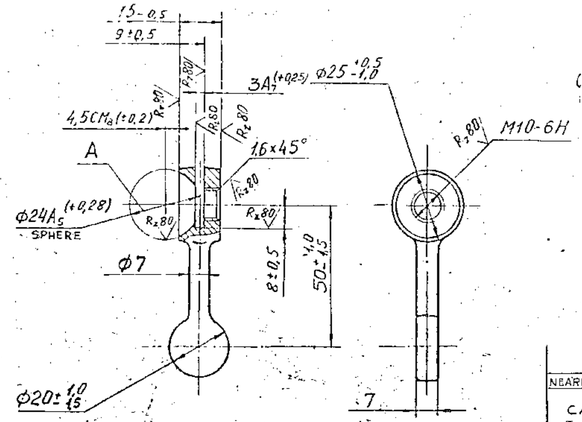

TECHNICAL CONDITIONS

1. ALTERNATE MATERIAL : CASTING
   I OST 3-4365-79
   40 X Л - GOST 977-75
2. UNSPECIFIED CASTING RADII SHOULD NOT EXCEED 3mm.
3. FORMING DRAFTS SHOULD NOT EXCEED 2°
4. HB 285 ... 229 (Ø 3.6 ---- 4.0)
5. COATING : ZINC PLATED 9 MICRONS THICK, CHROMIUM PLATED. REMOVE HYDROGEN EMBRITTLEMENT. CHECK DIMENSIONS BEFORE COATING.
6. CHECK DIMENSION 'A' BEFORE CUTTING GROOVE.
7. OTHER REQUIREMENTS FOR CASTING ARE AS PER OST 3-4365-79.

NOTE:-
1. All Dimensions are in mm.
2. The abbreviations and symbols are based on Russian Specifications.

NEAREST EQVT MATERIAL CASTING 45 X Л. I OST 3-4365-79			
ORGL MATERIAL	DCI(I)No & DATE	ISSUE	AMENDMENTS
ALL SHARP EDGES & CORNERS TO BE ROUNDED OFF. DRG. NOT TO BE SCALED	ALL THREADS TO CONFORM TO SPECIFICATION.		STAMP OR ETCH, PART NO. MANUFACTURER'S NAME & YEAR OF MFR.
SCALE:- 1:1 DATE :- 24 12 93	TOLERANCE ON DIMENSIONS UNLESS OTHERWISE SPECIFIED		USED ON:- 773-82-cl 106
DRN. WT :-(Kg) TCD. 0.05	NUT		
CHD. APD.	DRAWING NO 765-71-29		PART NO

CONTROLLERATE OF QUALITY ASSURANCE
(INFANTRY COMBAT VEHICLES)