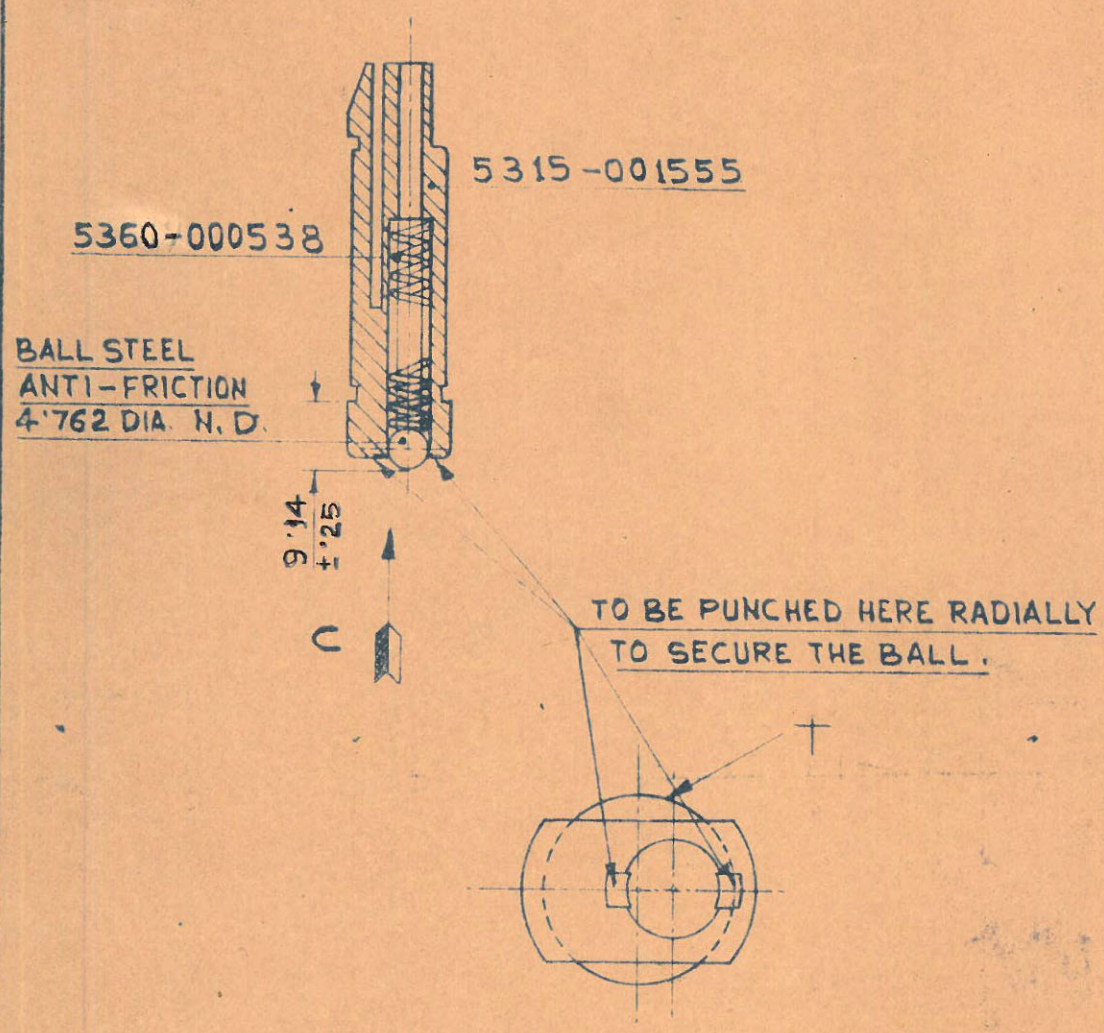

ENLARGED VIEW AT THE
DIRECTION OF ARROW 'C'.

MARK + HERE IN 2 CHARACTERS
AND CONTRACTOR'S CODE MARK
5315-001554.

AUTHY.	DATE	ZONE	BRIEF RECORD	SIG.
21743-SA	21-5-92	B-3	MARKING ARROW SHOWN CORRECTLY	MAJ
21061-SA	31.12.93		DRAWING RETRACED & RE-SEALED	LT. COL
			PREVIOUS D.C.(I) NOS. 11963-SA, 15485-SA, 17744-SA, 18183-SA, 18501-SA & 18784-SA.	COPY

METRIC

	DATE	NAME
DGN.		
DRN.		
CHD.		
TRD.	15.9.90	Sharada
COMP.	9.10.90	Handok
	I/C; D.O.	

SCALE:- 1:1

SEALED:- D.C.(I) 17744-SA, DT. 11.11.83

ASSY. DRG. NO.

MATERIAL:-

DIMENSIONS ARE IN MILLIMETRES

PIN, REAR MOUNTING,
7·62mm. M.G., MK. 1.

CQA(SA) ICHAPUR

APPROVED. DT. 10.12.69

CL. NEG. RETRACED

DESIGNER'S REF.
CISA-180

DS. CAT. NO.
5315-001554

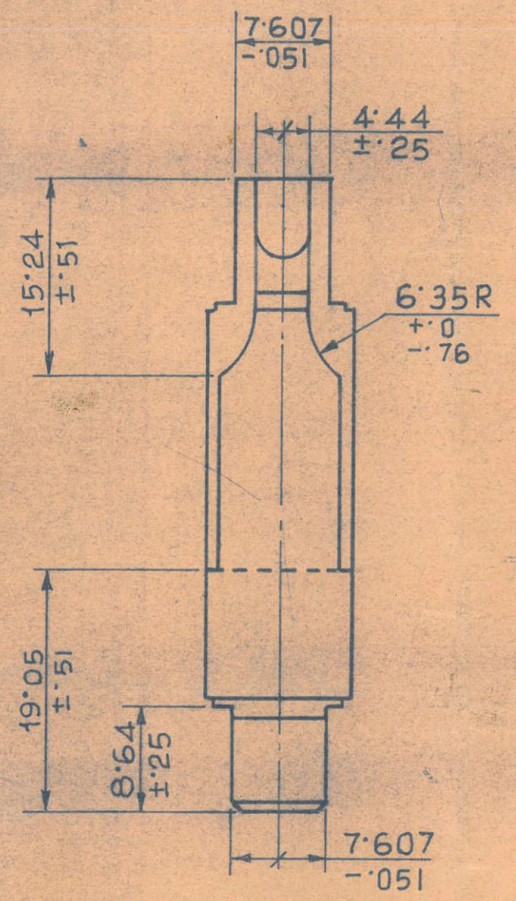

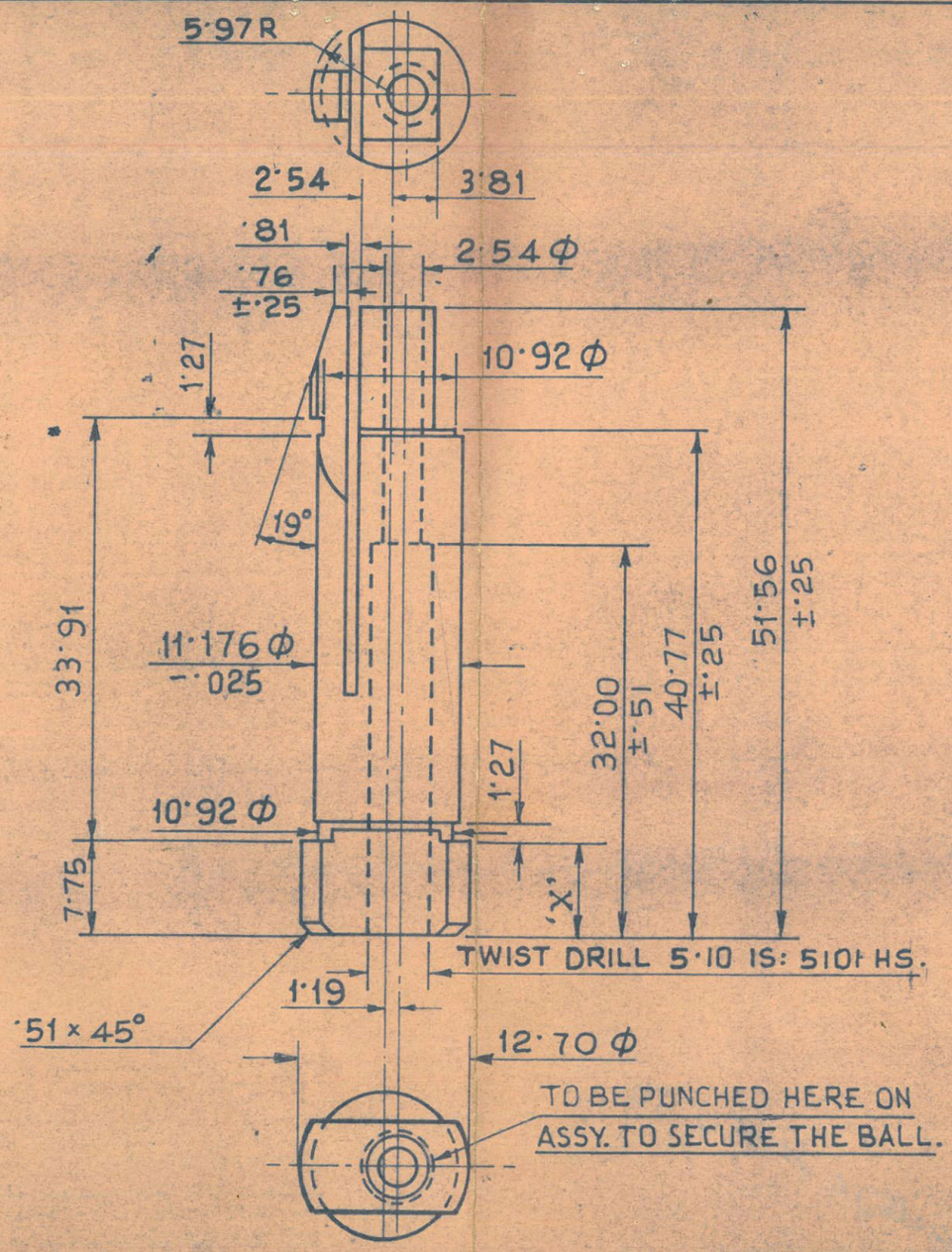

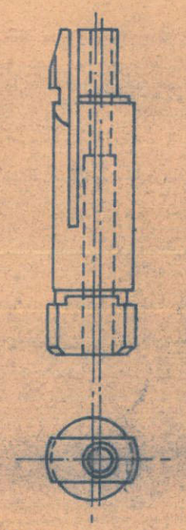

ACTUAL SIZE

SCALE :- 1:1

FOR EXPLANATION OF DETAILS WHEREEVER NOT SPECIFIED REFER D.D.NOTE SHEET NO. 3 (LATEST ISSUE)

MATERIAL :-
BS 970 PT. 1 : 1983 Gr. 080 M 50 OR
BS 970 PT. 5 : 1972 Gr. 250A 58 OR A61.

HEAT TREATMENT :-
HRD. & TEMPD. TO 225 - 275 H.V. ON PORTION MARKED 'X' AND REMAINING PORTION 380 - 440 H.V.

PROTECTIVE FINISH :-
PHOSPHATE TO SPECN. JSS 0465-01: 1988 CLASS II (ACCELERATED), OIL FINISH.

ESTIMATED WEIGHT :- 27 GRAMS.

METRIC.

AUTHY.	DATE	ZONE	BRIEF RECORD.	SIG.
22544-SA	21-5-94		PROFORMA CONVERTED TO A3 SIZE, NEG. RE-TRACED AND DRAWING RE-SEALED AS A RECORD OF RECEIPT	
			PREVIOUS D.C. NOS. 11963-SA, 15485-SA, 17823-SA, 18325-SA 18427-SA, 19457-SA, 22126-SA 22212-SA & 22220-SA.	COPY.

	DATE	NAME
DGN.		
DRN.		
CHD.		
TRD.	7.2.94	B.L. NATH
COMP.		
	23.5.94	I/C, D.O

SCALE :- 2:1

SEALED AS A RECORD OF RECEIPT D.C.(I) 11963-SA DT. 7.2.74

ASSY.
D.S.CAT.NO. 5315-001554
MATERIAL :- AS STATED.
DIMENSIONS ARE IN MILLIMETRES

PIN REAR MOUNTING.

CQA(SA) ICHAPUR.

APPROVED. DT. 10.12.69

NEG. RE-TRACED.

DESIGNER'S REF.
CISA 180/1

D.S.CAT.NO.
5315-001555

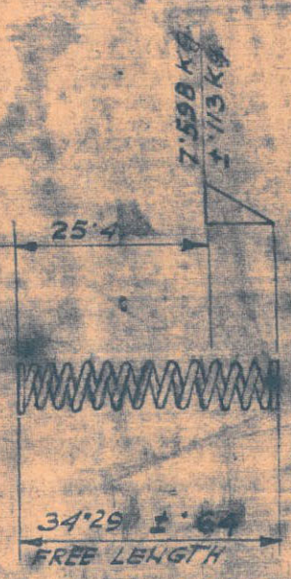

TOTAL NO. OF COILS :- 22 ± ½
OUTSIDE DIAMETER :- 4 [illegible] ± ·1[illegible]
DIA. OF WIRE :- 1·00 [illegible] WG)
SPRING SHOULD WORK FREELY INSIDE A BORE OF 5·08
[illegible] EACH END TO BE CLOSED IN GROUND SQUARE TO THE AXIS OF SPRING LEAVING ¾ OF A COIL, NON-EFFECTIVE AT EACH END.

[illegible]

SPRING TO BE COMPRESSED [illegible] LENGTH OF 25 [illegible] FOR 12 HOURS IMMEDIATELY BEFORE GAUGING.

NOTE :- WHERE TOLERANCES ARE NOT SHOWN DIMENSIONS IN WHOLE NUMBER OR WITH ONE DECIMAL PLACE ± 1·27 mm DIMENSIONS WITH TWO DECIMAL PLACES ± ·13 mm

METRIC

14330-SA	20.6.75		DIM. 34·29 ± ·64 WAS DIM. 34·29 ± ·25	DSS
11963-SA	7-2-74		DRG. SEALED AS A RECORD OF RECEIPT	DSS
AUTHY.	DATE	ZONE	BRIEF RECORD	SIG.

	DATE	NAME
DGN.		
DRN.		
CHD.		
TRD.		
COMP.		

FOR EXPLANATION [illegible] NOTE SHEET NO. 3

PROTECTIVE FINISH :- PHOSPHATE TO SPECN. WPN/GEN/13 CLASS II OIL FINISH

SCALE :- 1/1

SEALED :- AS A RECORD OF RECEIPT DCN 11963-SA DT. 7-2-74

ASSY. 5315-001554

MATERIAL :- BS 5216:1975 MS OR ND-3

DIMENSIONS ARE IN MILLIMETRES

SPRING

CISA ICHALKARANJI

APPROVED [illegible] 10-12-[illegible]9

DESIGNED [illegible] CISA 100[illegible]

D.S. CATA. 5360-000538

5360-000538