CAT/PART No.	NOMENCLATURE SCHEDULE OF PART COMPRISING	No PER ASSY	DRAWING No.
	SPIKE, COMMON, BEACON, CASED, IA		
(a) 5315-006301	SPIKE, COMMON, BEACON, IA		C11-400/SA-1
(b) V5/5985-012781	SPIKE, MOST BASE	1	C11-400/1
(b) V5/5985-012782	SPIKE, MOST BASE	1	C11-400/2

AMENDMENTS	SIG	DATE
(b) D.C.7002-I. NOM & CAT/PT. No. AMENDED.		23.4.09
(a) D.C.(I):-5244-I. NOMS. & CAT/PT. No. AMENDED.		14.4.88
D.C.(I):-3199-I. CGS. SCH. SEALED IN SUPERSESSION OF EXISTING FPS. SCH. TDE(I) 80/SA1.		15.10.75

PREPARED	TRACED	CHECKED	APPROVED
			for CONTROLLER C11, DEHRA DUN

SCHEDULE FOR DRG No.

C11-400/SA-1

DATE:-6.10.75

SCHEDULE FOR CAT/PART No.

(a) 5315-006301

SHTS SHT

D.C.(I):-3199-I, 5244-I, 7002-I

4D

FILING CAB.

ZONE	SYM	AMENDMENTS	SIG	CHKD	DATE
		D.C.(I):-3199-I:-CGS DRG. SEALED IN SUPERSESSION OF EXISTING FPS DRG. No. TDE(I) 80/SA-1.	W		15.10.75
		(a) D.C.(I):- 5244-I. NOM. & CAT/PT. No. AMENDED.			14.4.88
		(b) D.C:- 5684-I. FINISH AMENDED.			19.4.93

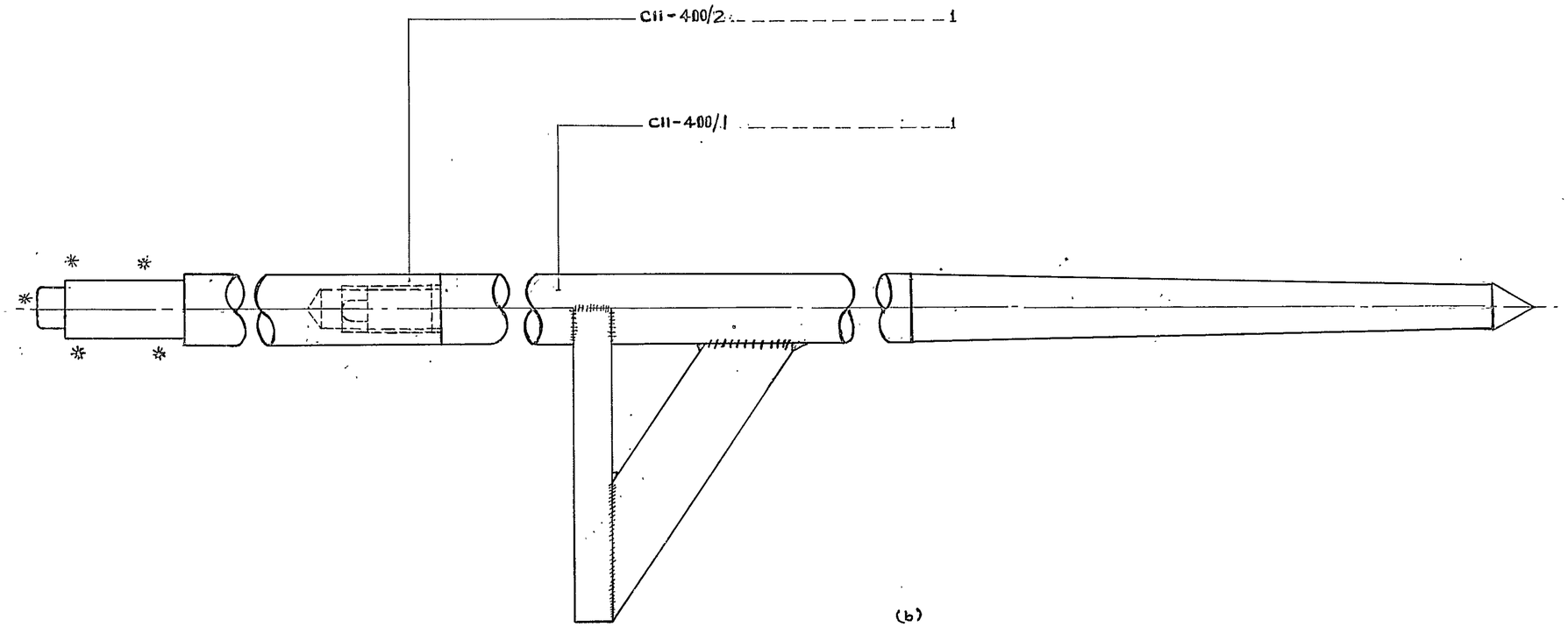

FINISH:-
APPLY PRIMER TO IS: 2074-1979 AND THEN PAINTED WITH PAINT (ISC-220 OR ISC-225 OF IS:5-1978) TO IS:168-193.
EXCEPT BEARING SURFACES
MARKED THUS *

BEARING SURFACES TO BE PHASPHATED CLASS A2 TO IS:3618-1966 & OILED.

D.C.(I):-3199-I, 5244-I, 5684-I.

FOR EXPLANATION OF DIMENSIONING ETC., SEE IRDE NOTE SHEET No. 1 THIRD ANGLE PROJECTION DIMENSIONS ARE IN mm	DRN	RSZ	APPROVED for CONTROLLER CIV. DEFENCE
	TCD	RSZ	
	CHD		
	CHD		DATE: 6.10.75
MATL & SPEC SEE DETAILS	USED ON	C11-400	
	BASED ON	TDE(I) 80/SA-1	
	CAT/PT No.	5315-006301	
FINISH:- SEE ABOVE	DRG. No.	C11-400/SA-1	
	SCALE	1:1	SH OF

(a)

SPIKE, COMMON, BEACON, IA.

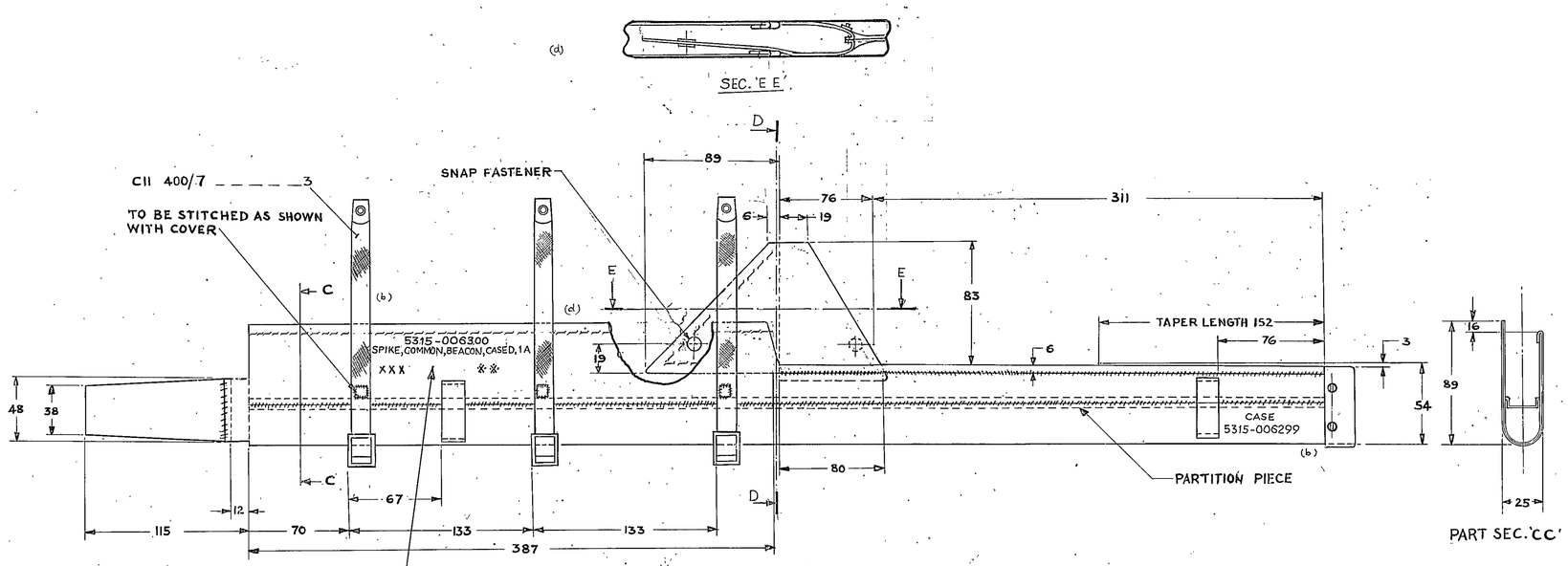

NOMENCLATURE 6 CHARACTERS
PART No. 6 ,,
MANUFACTURER'S INITIAL 3 ,, (XXX)
YEAR OF MANUFACTURE 3 ,, (※※)
TO BE STENCILLED IN BLACK

TOP VIEW SHOWN IN OPEN POSITION

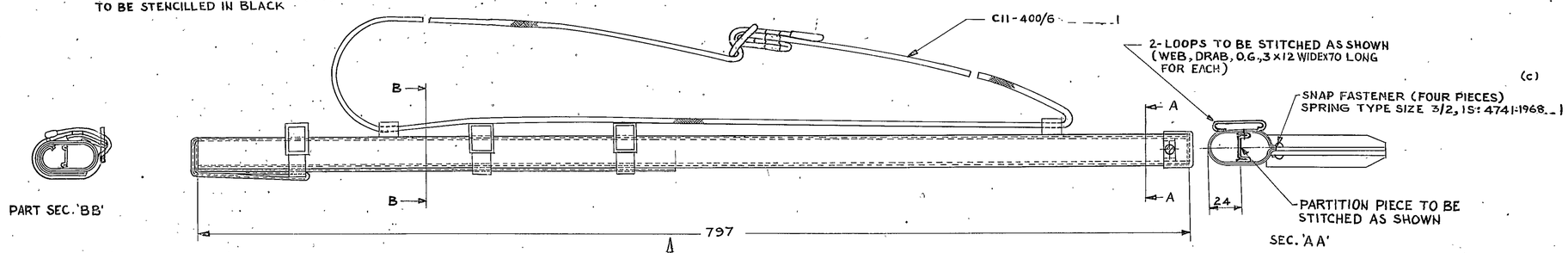

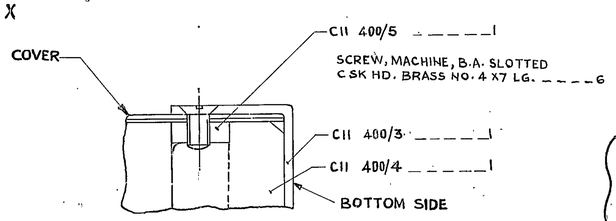

SCRAP VIEW
SHOWING FITTING OF BOTTOM
SCALE :- 2/1

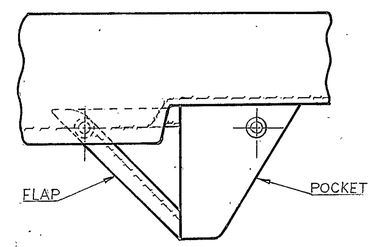

VIEW X

NOTE:-

1. COVER TO BE MADE AS SHOWN WITH CONVAS, COTTON, 680 g, OG, SPEC No. IND/TC/0135 (CAT No. H-2/8305-000121) ------ AS REQUIRED
2. ⋯⋯ INDICATES STITCHING
3. ALL EDGES TO BE HEMED
4. SEWING COTTON, OG. 27/TEX/9 TO SPEC. IND/TC/0279 TO BE USED.

FILING CAB

ZONE	SYM	AMENDMENTS	CHKD	SIG	DATE
		D.C.(I):-3199-I:-CGS.DRG. SEALED IN SUPERSESSION OF EXISTING FPS DRG. No. TDE(I) 162/S.A.1.	W		15.4.75
		(a) D.C.(I):- 5244-I. NOM. & CAT/PT. No. AMENDED. STENCILLING CAT/PT. No. ADDED.			14.4.88
	(b)	D.C:- 5677-I. STENCILLING. NOM. AMENDED. NOM. & CAT/PT. No. OF CASE (STENCILLING) ADDED.			15.3.93
	(c)	D.C:- 5684-I., MATL. AMENDED FOR SNAP FASTENER.			19.4.93
	(d)	D.C:- 6485-I. SEC. 'DD', SEC. 'EE' & VIEW 'X' SHOWN & NEW COPY SEALED IN SUPERSESSION OF EXISTING ONE.			5.9.2000

FOR EXPLANATION OF DIMENSIONING ETC., SEE IRDE NOTE SHEET No. 1 THIRD ANGLE PROJECTION DIMENSIONS ARE IN mm	DRN		APPROVED for CONTROLLER C11, DEHRADUN DATE :- 6.10.75
	TCD		
	CHD		
	CHD		
MATL. & SPEC. AS ABOVE	USED ON	C11 - 400	
	BASED ON	TDE (I) 162/SA1	
	CAT/PT No.	5315-006299	
FINISH:- CLEAN	DRG. No.	C11-400/SA-2	
	SCALE	1:2	SHT OF

CASE, SPIKE, COMMON, BEACON, 1A.

D.C. (I):- 3199-I, 5244-I, 5677-I, 5684-I, 6485-I.

(59)

	CAT/PART No.	NOMENCLATURE SCHEDULE OF PARTS COMPRISING:-	No. PER ASSY	DRAWING No.
		SPIKE, COMMON, BEACON, CASED, IA		
	5315-006299	CASE, SPIKE, COMMON, BEACON, IA.		C11-400/SA-2
(b)	V5/5940-008351	FERRULE METALLIC SHIELD CABLE GROUNDING.	1	C11-400/3
(b)	V5/5330-386730	RETAINER PACKING	1	C11-400/4
(a)(b)	V5/5330-386731	SEAL RING. METAL	1	C11-400/5
		SCREW, BA, BRASS, C'SK HD. No. 4X7 LG.	6	
	5340-010557	STRAP, WEBBING	1	C11-400/6
(b)	V5/3030-003121	BELT	3	C11-400/7

D.C. (I):-3199-I; 5244-I.7002-I

AMENDMENTS	SIG	DATE
(b) D.C. 7002-I. NOM. & CAT/PT. No. AMENDED.		23.4.09
(a) D.C. (I):-5244-I. NOMS. & CAT/PT. Nos. AMENDED.		14.4.88
D.C (I):-3199-I:-CGS.SCH SEALED IN SUPERSESSION OF EXISTING FPS SCH. TDE(I)162/S-A1		15.10.75

PREPARED	TRACED	CHECKED	APPROVED
			for CONTROLLER C11, DEHRA DUN

SCHEDULE FOR DRG. No.

C11-400/SA-2

DATE:-6.10.75

SCHEDULE FOR CAT/PART No.

5315-006299 (a)

SHEETS SHEET

4D

FILING CAB

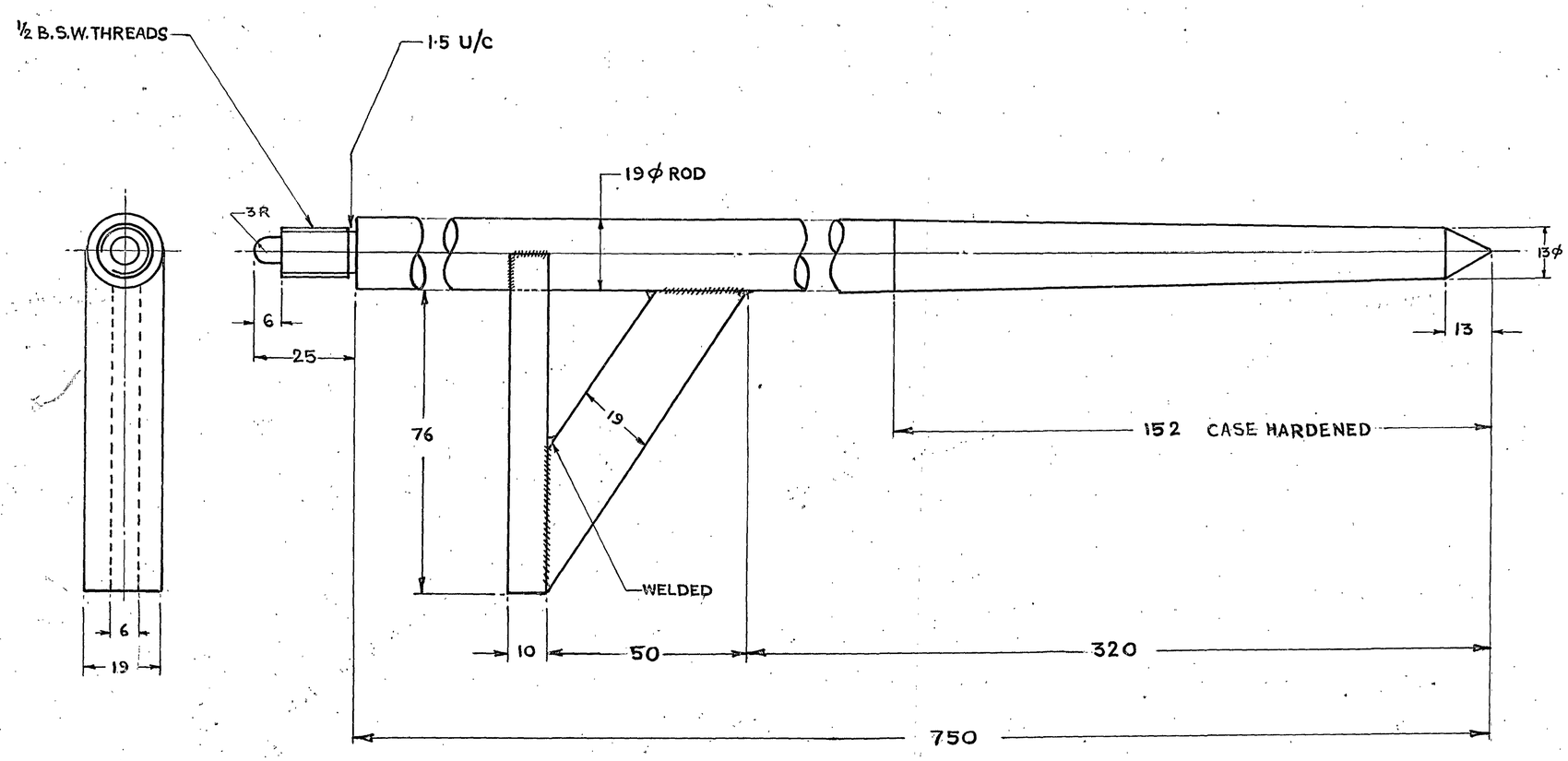

SYM	ZONE	AMENDMENTS.	CHD	SIG	DATE
		D.C.(1):-3199-I:-CGS.DRG.SEALED. IN SUPERSESSION OF EXISTING FPS DRG. No. TDE(1) 80/10.			15.10.75
		(a) D.C:- 5684-I. MATL. SPEC. AMENDED			19.4.83
	(b)	D.C. 7002-I. NOM. & CAT/PT. No. AMENDED			23.4.09

FOR EXPLANATION OF DIMENSIONING ETC., SEE IRDE NOTE SHEET No. 1
THIRD ANGLE PROJECTION
DIMENSIONS ARE IN mm

DRN		APPROVED FOR CONTROLLER CII, DEHRADUN
TCD		
CHD		
CHD		DATE:-6.10.75
MATL. & SPEC. (a) M.S.-IS:2073/C 20-1970	USED ON	CII-400/SA-1
	BASED ON	T.D.E.(1) 80/10
	CAT/PT. No.	V5/5985-012781 (b)
(b) FINISH CLEAN (D)	DRG. No.	CII-400/1
	SCALE	1:1 SH. OF

SPIKE, MOST BASE

D.C.(1):-3199-I, 5684-1. 7002-I

FOR EXPLANATION OF DIMENSIONING ETC, SEE CQA(I)GUIDE No. 001-1992.
THIRD ANGLE PROJECTION — DIMENSIONS ARE IN mm

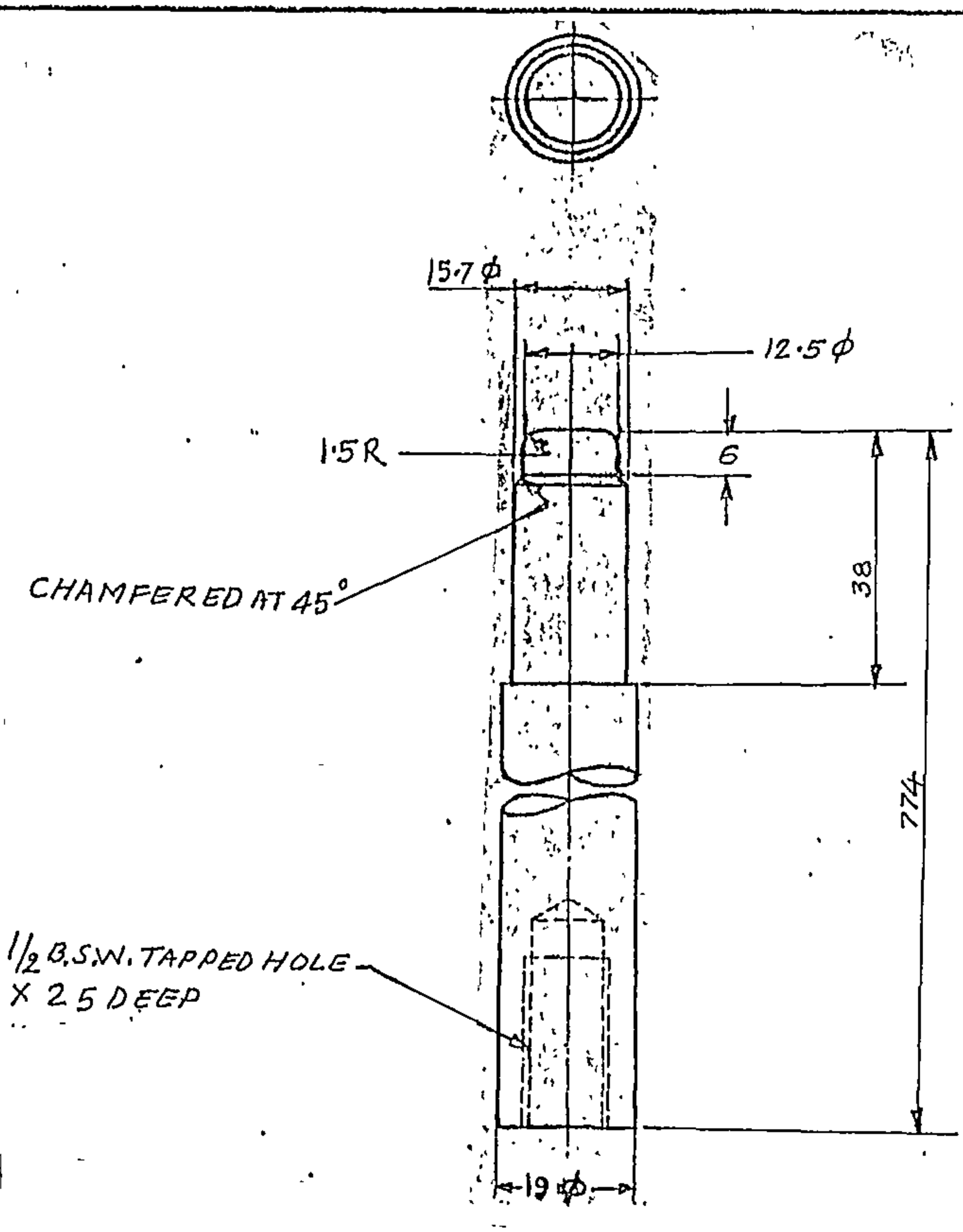

SYMB	AMENDMENTS	CHD	SIG	DATE
(a)	D.C. 7002-I. NOM. & CAT/PT-No. AMENDED.			23-4-09

DRN	Sd/-	APPROVED Sd/-	
TCD	Sd/-	FOR CONTROLLER	
CHD	Sd/-	C11, D. DUN	
CHD	Sd/-	DATE:- 6.10.75	
USED ON	C11-400/SA-I		
BASED ON	TDE(I)-80/11		
CAT/PT No.	V5/5985-012782		(a)
DRG No	C11-400/2.		
SCALE	:	SH	OF

MATL & SPEC: M.S.-IS:2073/C 20-1970

FINISH & SPEC: CLEAN

TITLE:- SPIKE MOST BASE (a)

D.C. (I) 3199-I, 5684-I, 7002-I

VETTED BY....

I/C QM....

POLYESTER NEGATIVE PREPARED AT CQA(I)D.DUN
PREPARED BY:- DATE:- 14.5.97
CHECKED BY:-

(5D)

FOR EXPLANATION OF DIMENSIONING Etc., SEE IRDE NOTE SHEET No. 1.

THIRD ANGLE PROJECTION

DIMENSIONS ARE IN MILLIMETERS.

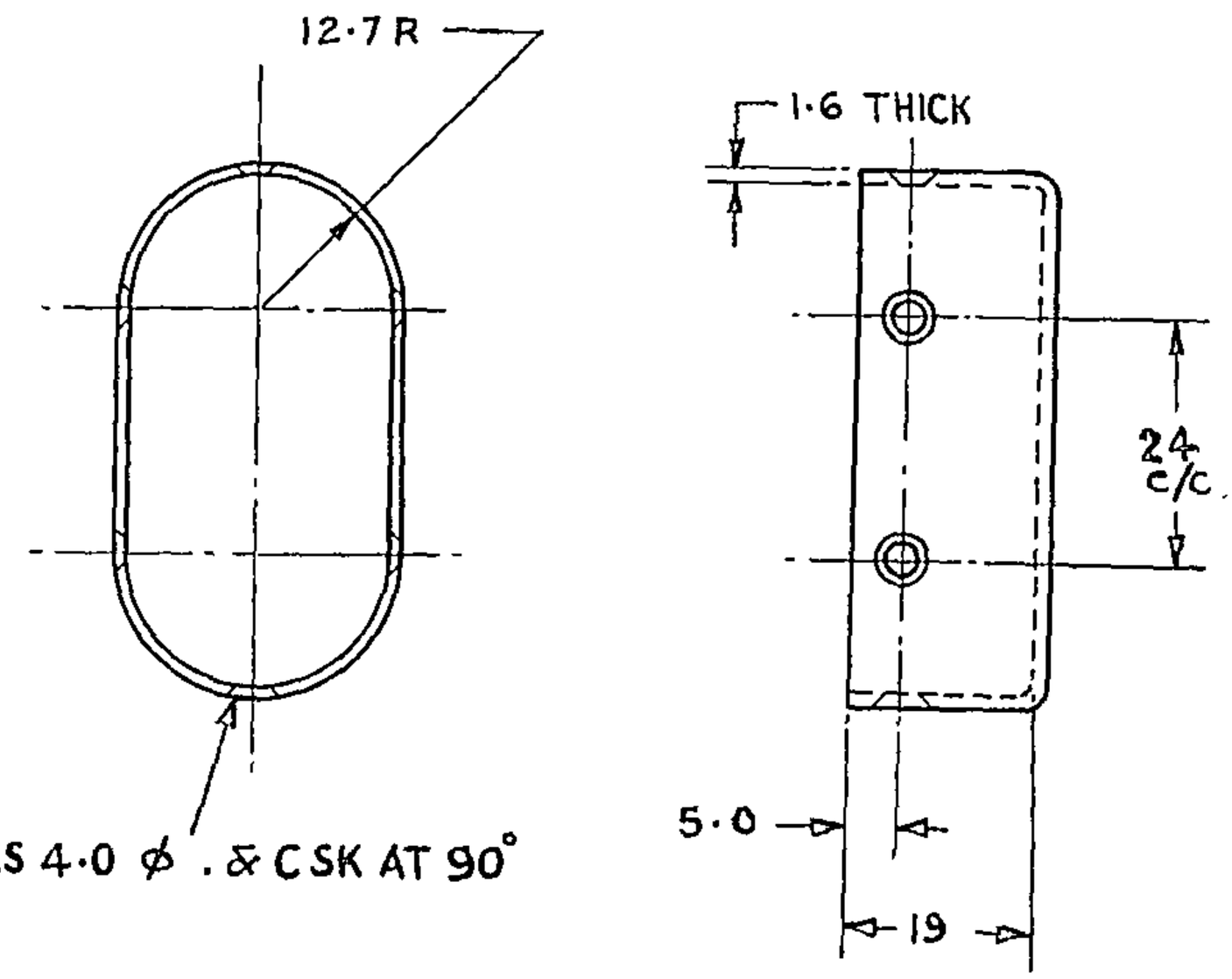

DC(I) 3199-I, 5684-I, 7002-I

SYM	AMENDMENTS	CHKD	SIG	DATE
(a)	D.C. 7002-I. NOM. & CAT/PT. No. AMENDED.			23.4.09
	(a) D.C:- 5684-I. MATL & FINISH AMENDED.			19.4.93
	D.C.(I)-3199-I. CGS. DRG. SEALED IN SUPERSESSION OF EXISTING FPS DRG No. TDE(I) 80/12.			15.10.75

DRN		APPROVED for CONTROLLER, CII, DEHRA DUN	
TCD			
CHD			
CHD		Date : 6.10.75	
USED ON	CII-400/SA-2		
BASED ON	TDE(I)-80/12		
CAT PT. No.	V5/5940-008351 (a)		
DRG. ON	CII-400/3		
SCALE	1:1	SH	OF

(a) MATL & SPECN: CuZn 30, HB OF IS: 410-1977

(a) FINISH: DULL BLACK BRONZED (MINIMUM THICKNESS 23 μm) TO IS: 1378-1987.

TITLE: FERRULE METALLIC SHIELD CABLE GROUNDING (a)

(5D)

FOR EXPLANATION OF DIMENSIONING Etc., SEE IRDE NOTE SHEET No. 1.
THIRD ANGLE PROJECTION DIMENSIONS ARE IN MILLIMETERS.

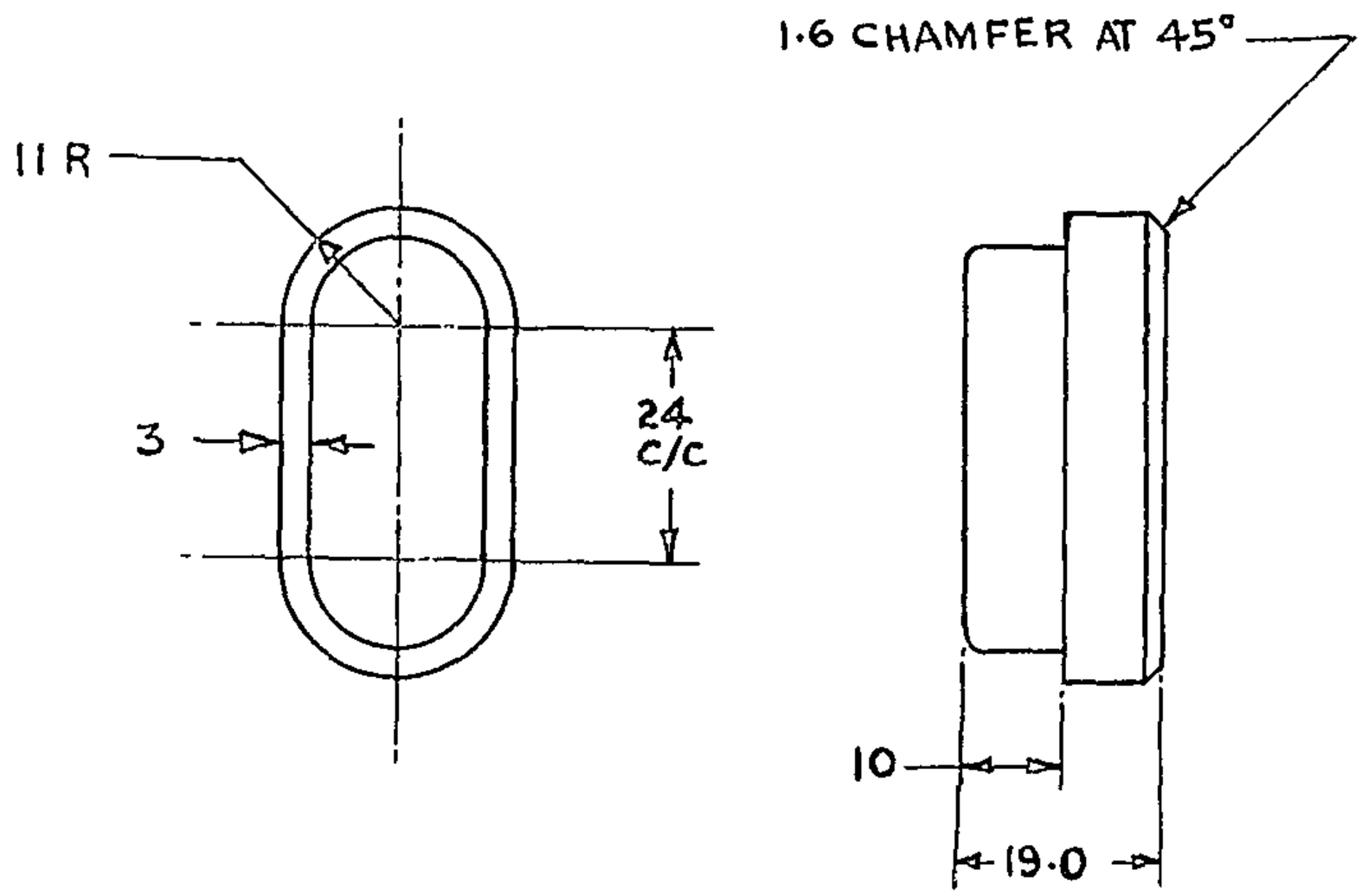

DC(I) 3199-I, 5684.I.7002-I

SYM	AMENDMENTS	CHKD	SIG	DATE
(b)	D.C. 7002-I. NOM. & CAT. PT. No. AMENDED			23.4.09
	(a) D.C:- 5684.I. MATL. SPEC. AMENDED.			19.4.93
	D.C.(I):-3199-I:-CGS.DRG.SEALED IN SUPERSESSION OF EXISTING FPS.DRG.No TDE(I)'80/19			15.10.75

DRN		APPROVED for CONTROLLER, CII, DEHRA DUN	
TCD			
CHD			
CHD		Date : 6.10.75	
USED ON	CII-400/SA-2		
BASED ON	TDE(I)-80/19		
CAT PT.No.	V5/5330-386730 (b)		
DRG. ON	CII-400/4		
SCALE	1:1	SH	OF

(a) MATL & SPECN: RUBBER-Gde3 TYPE 'B' OF IS:5192-1975

FINISH: CLEAN

TITLE (b)

RETAINER PACKING

(5D)

FOR EXPLANATION OF DIMENSIONING Etc., SEE IRDE NOTE SHEET No. 1.
THIRD ANGLE PROJECTION DIMENSIONS ARE IN MILLIMETERS.

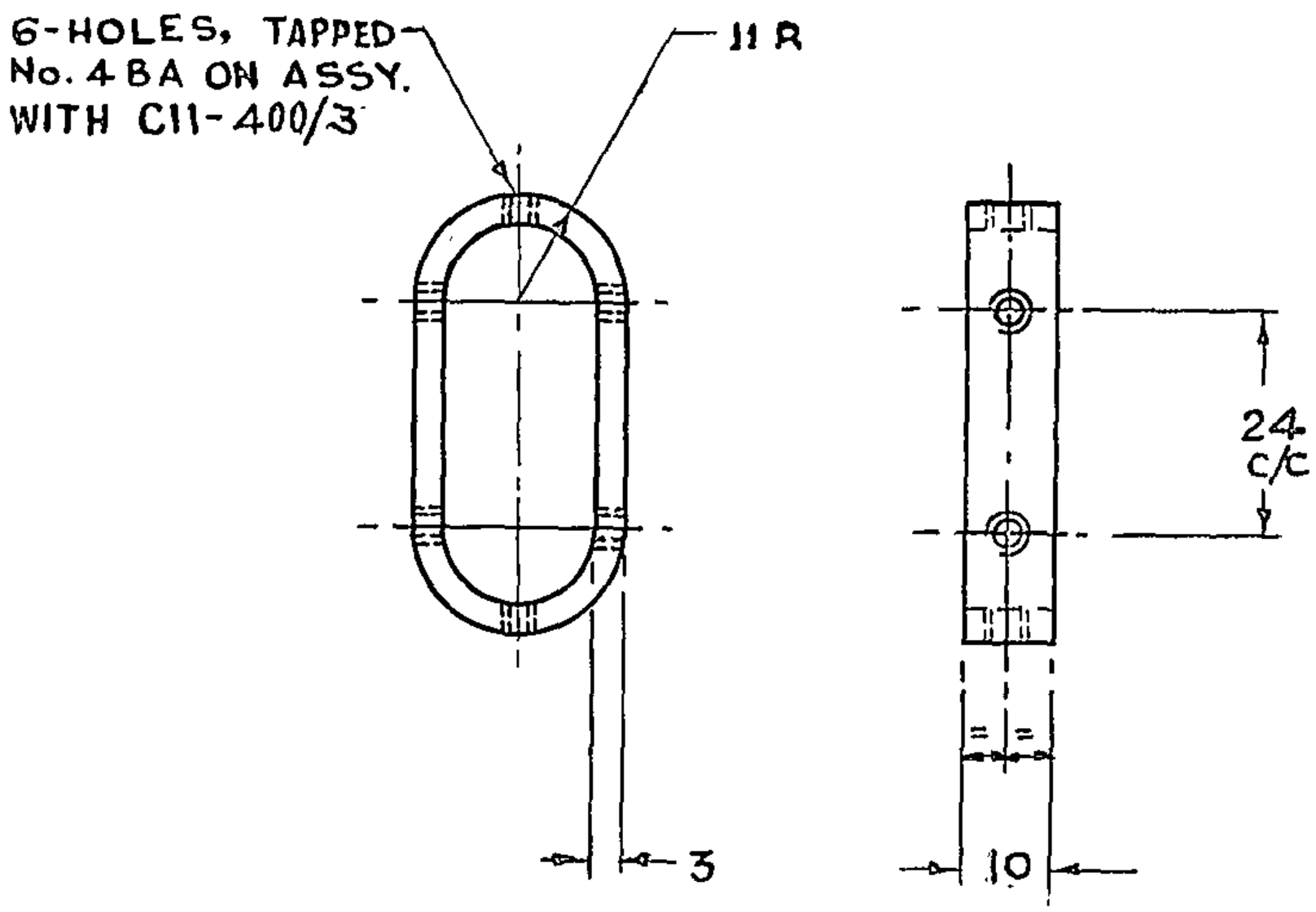

DC(I) 3199-I, 5684-I :7002-I

SYM	AMENDMENTS	CHKD	SIG	DATE
(b)	D.C. 7002-I. NOM. & CAT/PT. No. AMENDED.			23.4.09
	(a) D.C:- 5684-I. MATL & FINISH AMENDED.			19.4.93
	D.C.(I):- 3199-I:- CGS DRG. SEALED IN SUPERSESSION OF EXISTING FPS DRG. No. TDE(I) 80/20.			15.10.75

DRN		APPROVED for CONTROLLER, CII, DEHRA DUN
TCD		
CHD		
CHD		Date : 6.10.75
USED ON	C11-400/SA-2	
BASED ON	TDE (I) 80/20	
CAT PT.No.	I.O.S 930	
DRG. ON	C11-400/5	
SCALE	1:1	SH OF

(a) MATL & SPECN: CuZn30, HB OF IS: 410-1977.

FINISH: DULL BLACK BRONZED (MINIMUM THICKNESS 23 μm) TO IS: 1378-1987.

TITLE (b)

SEAL RING METAL

FILING CAB

BUCKLE, BRASS 25 mm SPEC.- IND/GS/468
CAT No. CN 8315-000019

TIP, BRASS, 25 mm WITH EYELET HOLES
SPEC. IND/GS/468 (CAT No. CN 8315-000061) 2

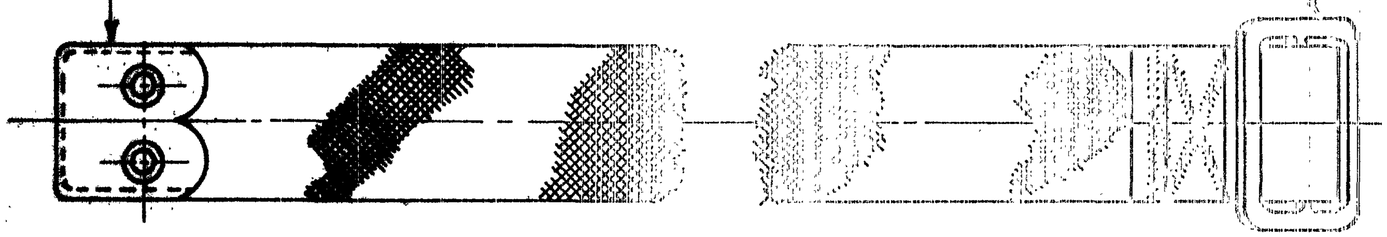

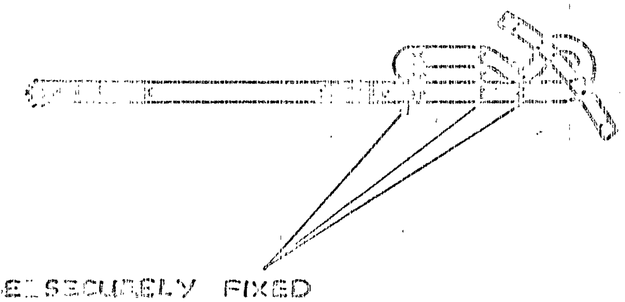

WEB, THICK OG 25X1420 SPEC.
IND/TC/0344 1

TO BE SECURELY FIXED
BY STITCHING AS SHOWN,
WITH SEWING COTTON OG
27/TEX/9 SPEC. IND/TC/0279

SYM	ZONE	AMENDMENTS	SIG	DATE	CHD
		(a) D.C.(I):- 5244-I. NOM. & CAT/PT. No. AMENDED	sd/.	14.4.80	sd/.

FOR EXPLANATION OF DIMENSIONING ETC., SEE IDE NOTE SHEET No. 1
THIRD ANGLE PROJECTION
DIMENSIONS ARE IN mm

DRN	sd/.	APPROVED sd/. for CONTROLLER CII, DEHRADUN.
TCD	sd/.	
CHD	sd/.	
CHD	sd/.	DATE:- 6.10.75
USED ON	CII-400/SA-2	
BASED ON	IDE(I) 162/10	
CAT/PT No.	5340-010557	
DRG. No.	CII-400/6	
SCALE	1:1	SHT OF

MATL. SPEC
SEE ABOVE

FINISH:- CLEAN

STRAP, WEBBING

12.7.03

(15A)

FILING CAB.

(a)

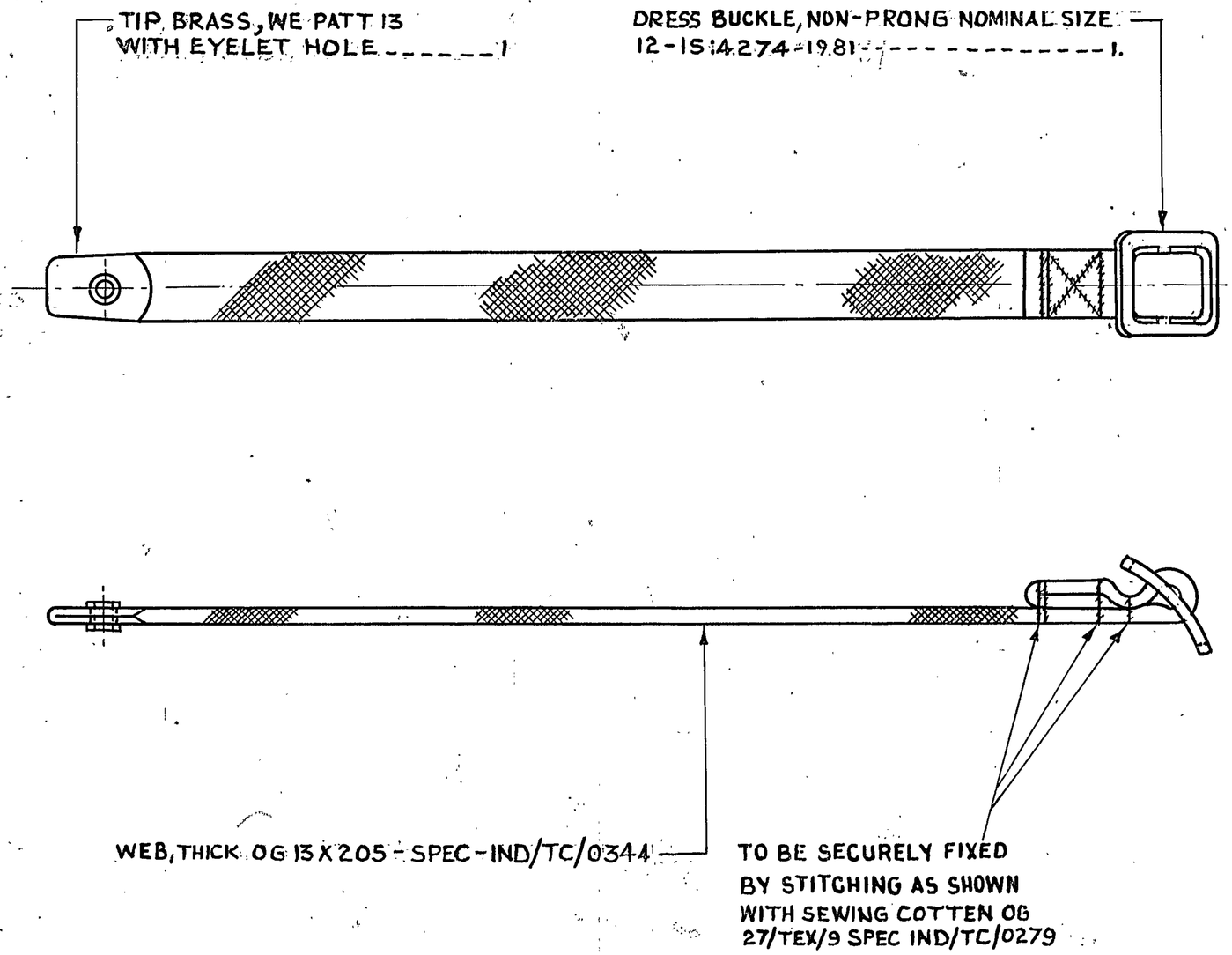

ZONE	SYM	AMENDMENTS	SIG.	CHKD	DATE
		D.C.(I):-3199-I:-CGS.ORG.SEALED IN SUPERSESSION OF EXISTING FPS DRG.No. TDE.(I) 162/11.			15.10.75
		(a) D.C:-5684.I. MATL. FOR DRESS BUCKLE AMENDED.			19.4.93
	(b)	D.C.7002-I. NOM. & CAT/PT. No. AMENDED.			23 4/09

FOR EXPLANATION OF DIMENSIONING ETC., SEE IRDE NOTE SHEET No. 1
THIRD ANGLE PROJECTION
DIMENSIONS ARE IN mm

DRN.		APPROVED
TCD		for
CHD		CONTROLLER C11, DEHRA DUN
CHD		DATE:- 6.10.75

MATL. & SPEC.
AS ON DRG

USED ON	C11-400/SA-2
BASED ON	TDE(I) 162/11
CAT/PT No.	V5/3030-003121

FINISH:- CLEAN

DRG No.	C11-400/7
SCALE	1:1
SHT	OF

BELT FLAT

D.C.(I):-3199-I, 5684.I. 7002-I

58

(a)

CAT/PART No.	NOMENCLATURE SCHEDULE OF PART COMPRISING	No PER ASSY	DRAWING No
5315-006300	SPIKE, COMMON, BEACON, CASED, IA.		C11-400
5315-006301	SPIKE, COMMON, BEACON, IA.	1	C11-400/SA-1
5315-006299	CASE, SPIKE, COMMON, BEACON, IA.	1	C11-400/SA-2

AMENDMENTS	SIG	DATE
(a) D.C.(I):-5244-I. NOMS.& CAT/PT. Nos. AMENDED.		14.4.88
D.C(I):-3199-I & CGS.SCH-SEALED IN SUPERSESSION OF EXISTING FPS.SCH TDE(I)162/A2		15.10.75

PREPARED	TRACED	CHECKED	APPROVED
Jnath	Asshamma		for CONTROLLER C11, DEHRA DUN

SCHEDULE FOR DRG No.

C11-400

DATE:-

SCHEDULE FOR CAT/PART No.

5315-006300 (a)

SHEETS SHEET

D.C.(I):-3199-I, 5244-I.

(4D)

FILING CAB

ZONE	SYM	AMENDMENTS	SIG	CHKD	DATE
		D.C.(I)-3199-I-CGS.DRG. SEALED IN SUPERSESSION OF EXISTING FPS. DRG.No TDE(I)162/A-2.			15.10.75
		(a) D.C.(I):-5244-I. NOM. & CAT/PT. No. ADDED.			14.4.88

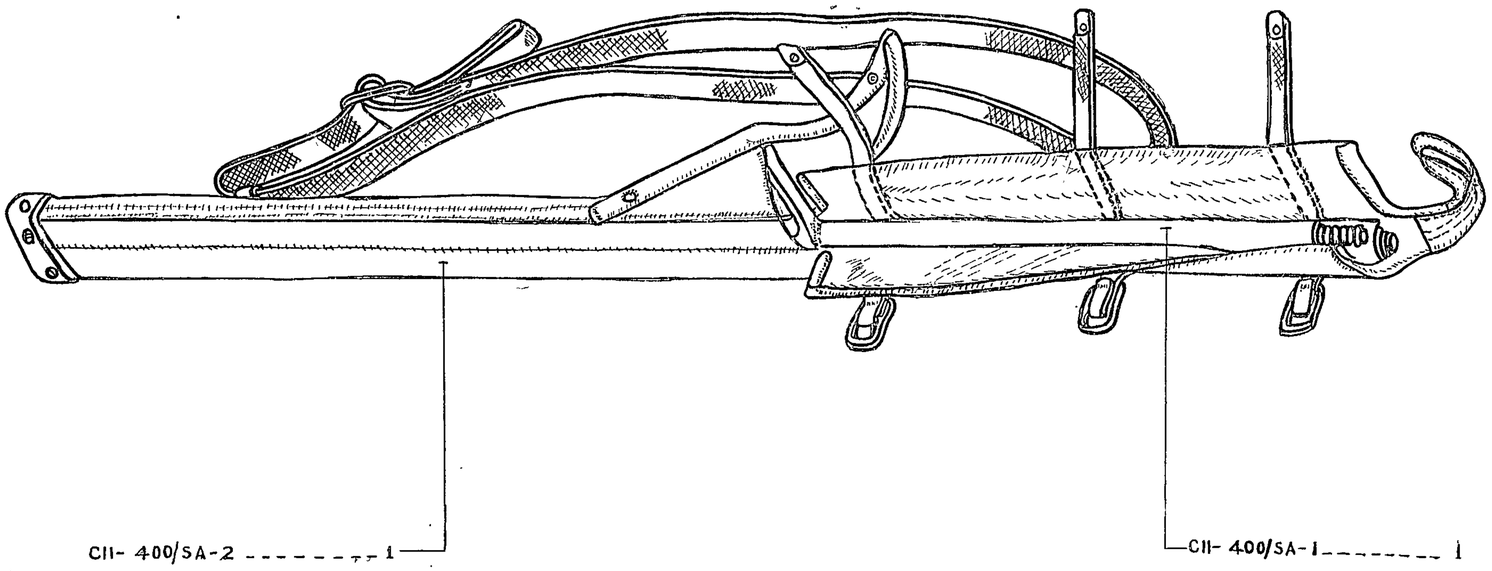

PERSPECTIVE VIEW

FOR EXPLANATION OF DIMENSIONING ETC., SEE IRDE NOTE SHEET No. 1 THIRD ANGLE PROJECTION DIMENSIONS ARE IN mm	DRN	APPROVED
	TCD	for CONTROLLER CII, DEHRA DUN
	CHD	DATE:- 6.10.75
	CHD	
MATL. & SPEC.. SEE DETAILS	USED ON	
	BASED ON	TDE(I) 162/A 2
	CAT/PT No.	5315-006300
FINISH:- SEE DETAILS	DRG. No.	CII- 400
	SCALE	1:1 SH OF

(a) SPIKE, COMMON, BEACON, CASED, IA

D.C.(I):-3199-I, 5244-I.