DRAWING NUMBER
327-108-1

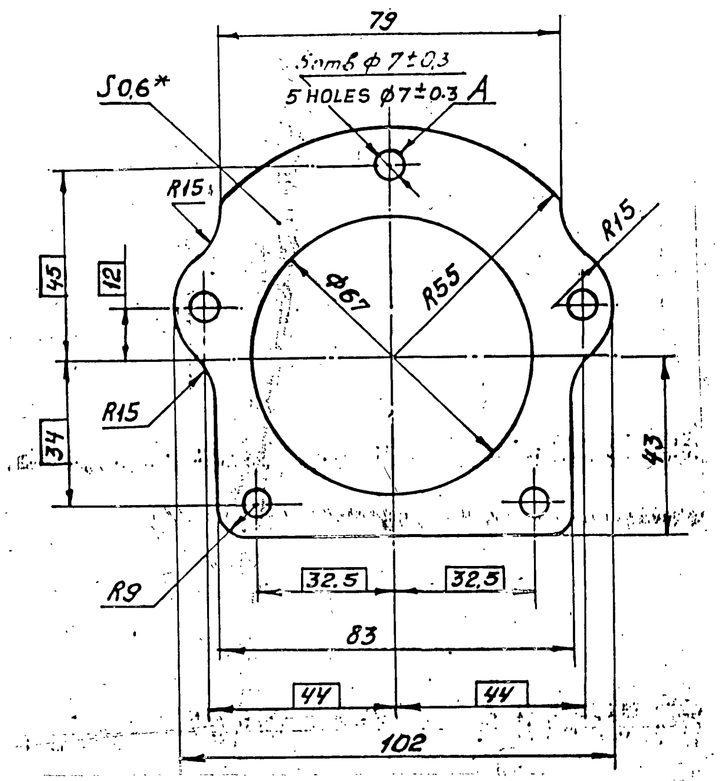

1. unspecified tolerances of dimensions ±0.5mm.
2. shift of axes of holes A from the true position should not exceed 0.3 mm.
3. Dimension for reference.

EXPLANATORY NOTE:

Material Quoted: Rubberized Asbestos Fabric ПОН 0.6 GOST 481-80.

ПОН (PON): Grade of Asbestos fabric

0.6 : Thickness in mm with tolerance ±0.10 as per GOST 481-80.

b) PHYSICAL, MECHANICAL, & TECHNOLOGICAL REQUIREMENTS: AS PER GOST 481-80 FOR GRADE ПОН 0.6

1. WORKING MEDIUM : HEAVY PETROLIUM PRODUCTS (SOLAR OIL, DIESEL FUEL, FURNACE OIL, PARAFIN, TAR, ASPHALT, BITUMEN).
2. LIMITING PRESSURE kgf/cm^2 = 64.
3. LIMITING TEMPERATURE °C = 200
4. DENSITY g/cm^3 = 1.6-2.0
5. CONVENTIONAL BREAKING POINT IN THE TRANSVERSE DIRECTION kgf/cm^2 (MIN). = 66.
6. INCREASE IN WEIGHT IN LIQUID MEDIA % (MAX) IN KEROSENE AT 23°C FOR 12 HOURS } 40.
7. COMPRESSIBILITY AT 350 kgf/cm^2 % = 8-20.
8. RECOVERY AFTER REMOVAL OF PRESSURE 350 kgf/cm^2 (min) } = 30.

** Rubberized Asbestos fabric ПОН 0.6 GOST 481-80.

KVD No: 78497

PILOT SAMPLE SHOULD BE APPROVED BY A H S P BEFORE BULK PRODUCTION.

EST. WT.	TO BE STAMPED OR MARKED WHERE INDICATED THUS # (LETTERS)
0.0052 kg.	

ALL SHARP EDGES AND CORNERS TO BE REMOVED UNLESS OTHERWISE STATED MACHINED CORNERS TO HAVE R OUTSIDE R INSIDE EQUIVALENT CHAMFERS ARE PERMISSIBLE.

ISSUE	DATE	NATURE OF AMENDMENTS

DRN	G.N.T.
CHD	
TCD	
APPD	
DATE	4-5-89
SCALE :- 1:1	
DIMENSIONS IN mm.	
TOLERANCE ON DIMNS UNLESS OTHERWISE STATED IS 2102-69	
ALL THREADS TO CONFORM TO	

MATERIAL :- ** See above

USED ON :- CG 327-00-45

CONTROLLERATE OF QUALITY ASSURANCE (HEAVY VEHICLES) AVADI

TITLE GASKET

D S CAT NUMBER

DRAWING NUMBER 327-108-1

A/8

SIZE A2

DRAWING NUMBER
327-109-1

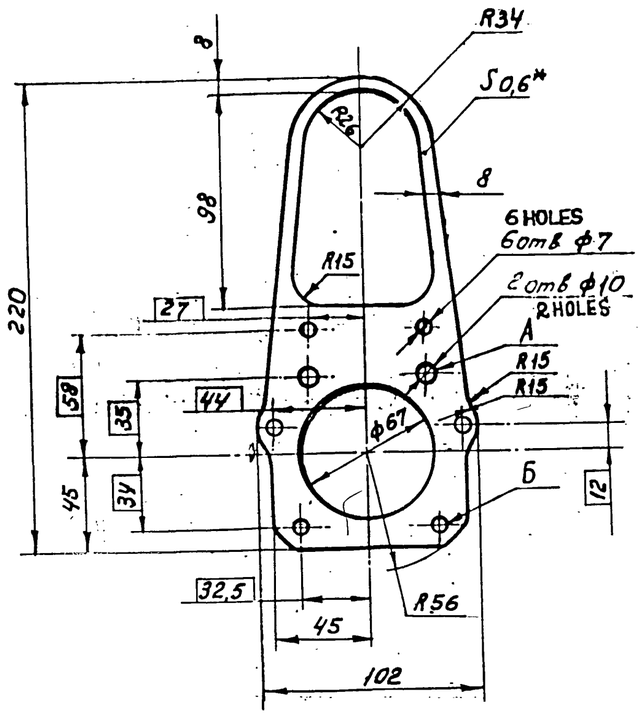

1. Alternate material: Rubberized Asbestos Fabric ПМБ 1.0 GOST 481-80
2. unspecified tolerances of dimensions up to 80 mm ± 0.3mm
   above 80mm ± 0.5mm.
3. shift of axes of hole A from the true position should not exceed 0.2mm
4. shift of axes of hole Б from the true position should not exceed 0.2mm.
5. * Dimension for reference.

EXPLANATORY NOTE:

Material Quoted: Rubberized Asbestos Fabric ПМБТ 0.6 GOST 481-80

Alternate material Quoted: Rubberized Asbestos Fabric ПМБ 1.0 GOST 481-80.

ПМБ (PMB): Grade of Asbestos fabric.

0.6, 1.0 : Thickness in mm with tolerance ± 0.10 As per GOST 481-80.

a) PHYSICAL, MECHANICAL & TECHNOLOGICAL REQUIREMENTS: (AS PER GOST 481-80) FOR GRADE ПМБ

1. WORKING MEDIUM : OIL FRACTION (DIESEL AUTOMOBILES, AVIATION INDUSTRIAL, TURBINES AND TRANSFORMER OILS).
2. LIMITING PRESSURE Kgf/cm² : 25.
3. LIMITING TEMPERATURE °C: 150.
4. DENSITY g/cm³ : 1.5-2.0.
5. CONVENTIONAL BREAKING POINT TRANSVERSE DIRECTION Kgf/cm² (MIN) = 130
   a) AFTER SOAKING IN KEROSENE AT 23°C FOR 12 HOURS : 70
   b) AFTER SOAKING IN OIL MS-20 OR MK-22 AT 150°C FOR 12 HOURS = 100
6. INCREASE IN WEIGHT IN LIQUID MEDIA % (MAX)
   a) IN KEROSENE AT 23°C FOR 12 HOURS = 10-24
   b) IN OILS MS-20 OR MK-22 = 23.
7. COMPRESSIBILITY AT 350 Kgf/cm² % = 5-16.
8. RECOVERY AFTER REMOVAL OF PRESSURE 350 kgf/cm² = 35 (MIN).

**
Rubberized Asbestos Fabric ПМБТ
0.6 GOST 481-80

PILOT SAMPLE SHOULD BE APPROVED BY A H S P BEFORE BULK PRODUCTION.

EST. WT. 0.0078 kg.	TO BE STAMPED OR MARKED WHERE INDICATED THUS # (LETTERS)

ALL SHARP EDGES AND CORNERS TO BE REMOVED UNLESS OTHERWISE STATED MACHINED CORNERS TO HAVE R OUTSIDE R INSIDE EQUIVALENT CHAMFERS ARE PERMISSIBLE.

ISSUE	DATE	NATURE OF AMENDMENTS

DRN		MATERIAL :- ** See above
CHD		USED ON :- CB 327-00-45
TCD		
APPD		CONTROLLERATE OF QUALITY ASSURANCE (HEAVY VEHICLES) AVADI
DATE	4-5-89	
SCALE :- 1:2		
DIMENSIONS IN mm		TITLE GASKET
TOLERANCE ON DIMS UNLESS OTHERWISE STATED IS 2102-69		
ALL THREADS TO CONFORM TO		D S CAT NUMBER / DRAWING NUMBER 327-109-1

KVD NO 78498

SIZE A2

327-126

ЕСКД

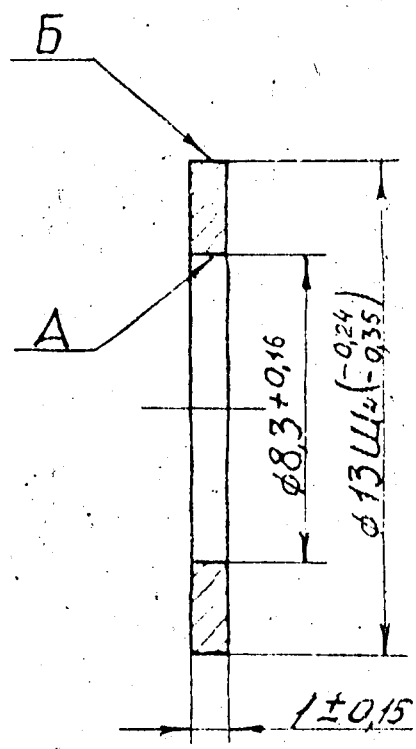

1. Радиальное биение отверстия А относительно оси поверхности Б не более 0,4 мм.
2. Детали должны соответствовать утвержденному эталону.
3. Остальные требования по ТУ81-04-395-75.

1. RUN-OUT OF HOLE A RELATIVE TO AXIS OF SURFACE Б SHOULD NOT EXCEED 0·4 MM.
2. COMPONENTS SHOULD AGREE WITH APPROVED STANDARD.
3. THE REST OF THE REQUIREMENTS - IN ACCORDANCE WITH ТУ 81-04-395-75

(A) MATERIAL:- FIBRE ф Т 1, 1st GRADE GOST 14613-83

			EST. MASS 0.0001 Kg	TO BE STAMPED OR MARKED WHERE INDICATED THUS # (LETTERS) (A-8)
			ALL SHARP EDGES AND CORNERS TO BE REMOVED UNLESS OTHERWISE STATED MACHINED CORNERS TO HAVE R OUTSIDE R INSIDE EQUIVALENT CHAMFERS ARE PERMISSIBLE.	
A	15.2.88	AUTHY.NOTN.NO. ВК 85-88		
ISSUE	DATE	NATURE OF AMENDMENTS		
DRN		SCALE - 5 : 1	MATERIAL:- ~~FIBRE ф Т1~~ (A) SEE ABOVE ~~GOST 14613-69~~	USED ON:- Сб 327 10 52, Сб 327 00 45, Сб 20-27-00-4
CHD		DIMENSIONS IN mm.	CONTROLLERATE OF INSPECTION (HEAVY VEHICLES) AVADI	
TCD		TOLERANCE ON DIMNS UNLESS OTHERWISE STATED	TITLE:- GASKET (1,0 mm)	
APPD				
DATE 08-5-88		ALL THREADS CONFORM TO	D S CAT NUMBER	DRAWING NUMBER 327 126

327-126A

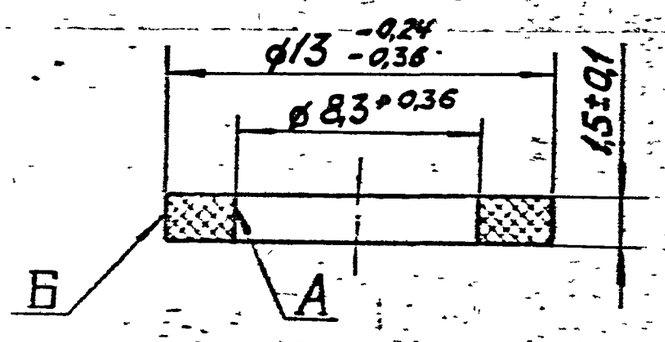

1. SUBJECT THE PART TO HEAT-TREATMENT IN COMPLIANCE WITH INSTRUCTIONS U-150-131/68.

2. RADIAL RUN-OUT OF SURFACE A WITH RESPECT TO THE AXIS OF SURFACE Б SHOULD NOT EXCEED 0.2MM.

3. CARRY OUT ACCEPTANCE AS PER STANDARD.

4. STAMP FINAL ACCEPTANCE AND MARK DATE OF MANUFACTURE, OR BATCH OF PARTS ON THE LABEL.

5. OTHER TECHNICAL REQUIREMENTS AND ACCEPTANCE ARE AS PER OCT 4 Г0.005.051.

EXPLANATORY NOTE -

6 MATERIAL QUOTED - POLYAMIDE A6 - 210 / 311 - 14 OST 6-06-C9-76

1 APPEARANCE AND COLOUR

CRUMB (GRANULE) FROM WHITE TO LIGHT YELLOW COLOUR OR COLOURED SPOT INCLUSION OF OXIDES PARTICLES ARE ALLOWED NOT MORE THAN 18 FOR 100 g OF POLYAMIDE

2 SIZE OF CRUMB (GRANULE)

DIAMETER = 2,0 - 4,0

LENGTH = 1,0 - 5,0

3 MOISTURE CONTENT % = 0,2 (MAX)

4 RELATIVE VISCOSITY = 2,4 (MIN)

5 % CONTENT OF EXTRACTABLE SUBSTANCES = 1,5 (MAX)

6 % CONTENT OF UN-CHOPPED CRUMBS (GRANULES) = 0,5 (MAX) FOR A LENGTH UP TO 20mm

7 MELTING TEMPERATURE = 215°C (MIN)

PILOT SAMPLE SHOULD BE APPROVED BY A H S P BEFORE BULK PRODUCTION

EST WT 0,0001 Kg

TO BE STAMPED OR MARKED WHERE INDICATED THUS = (LETTERS)

ALL SHARP EDGES AND CORNERS TO BE REMOVED UNLESS OTHERWISE STATED MACHINED CORNERS TO HAVE R OUT SIDE R INSIDE EQUIVALENT CHAMFERS ARE PERMISSIBLE

DRN		MATERIAL - POLYAMIDE A6-210 / 311-14 OST 6-06-C9-76	USED ON C6 327-00-45 C6 327-10-52 C5 20-27-00-4
CHK			
TCD			
APPD			
DATE	24-4-87	CONTROLLERATE OF QUALITY ASSURANCE, HEAVY VEHICLES, AVAD	
SCALE - 5 1			
DIMENSIONS IN mm			
TOLERANCE ON DIMNS UNLESS OTHERWISE STATED IS 2102-69		TITLE GASKET (1.5 mm)	
ALL THREADS TO CONFORM TO		D S CAT NUMBER	DRAWING NUMBER 327-126A

ISSUE	DATE	NATURE OF AMENDMENTS

SIZE A3

DRAWING NUMBER
327 176

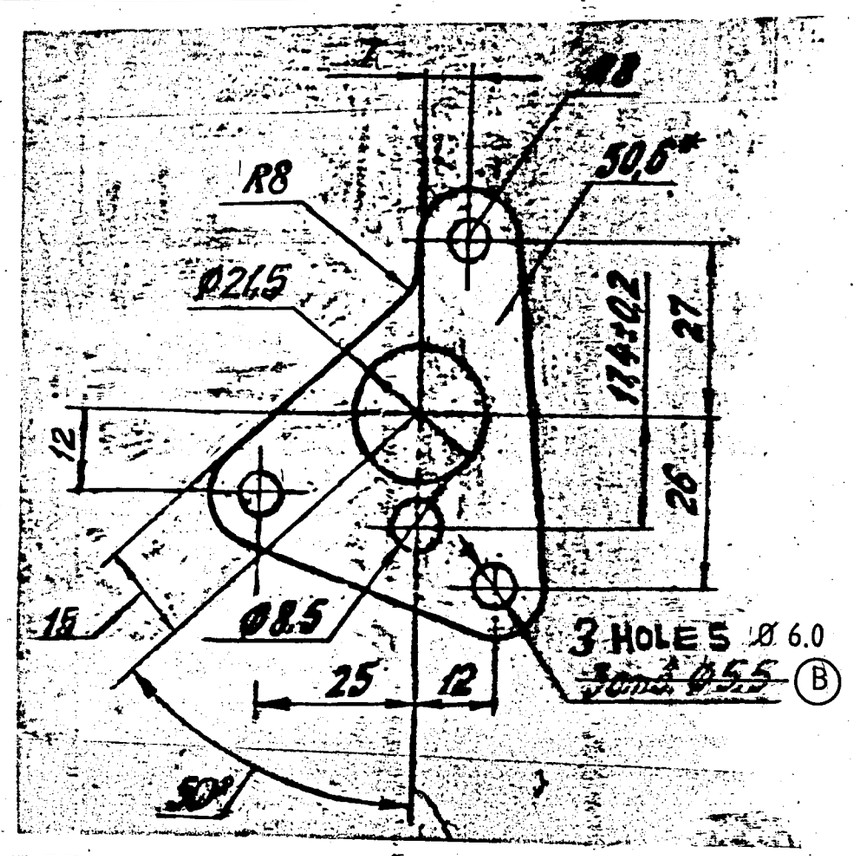

EXPLANATORY NOTE:

Material Quoted: Paronite ПОН 0.6 GOST 481-80
Paronite ПОН (PON) 0.6 : Rubberized asbestos fabric 0.6 thickness.

PHYSICAL, MECHANICAL & TECHNOLOGICAL REQUIREMENTS

1. Working medium : Heavy petrolium products (Solar oil, Diesel Fuel, Furnace oil, Parafin, Tar, Asphalt, Bitumen)
2. Limiting pressure kgf/cm^2 = 64
3. Limiting temperature °C = 200
4. Density g/cm^3 ≐ 1.6-2.0
5. Conventional breaking point in the transverse direction kgf/cm^2 (min) = 66
6. Increase in weight in liquid media % (max) in Kerosene at 23°C for 12 hours } = 40
7. Compressibility at 350 kgf/cm^2 % = 8-20
8. Recovery after removal of pressure 350 kgf/cm^2 (min) = 30

1. Dimensions to be ensured with accuracy ± 0.3 mm.
2. In tropical manufacture part/component should be manufactured from paronite ПОН Т 0.6 GOST 481-80 and should have marking with yellow paint in letter type T.
3. Dimensions for reference.
4. (A) ALTERNATE MATERIAL:- PARONITE (RUBBERIZED ASBESTOS FABRIC) ПМБ 0.6 GOST 481-80.

PILOT SAMPLE SHOULD BE APPROVED BY A H S P BEFORE BULK PRODUCTION

EST. WT. 0.0051 kg.

TO BE STAMPED OR MARKED WHERE INDICATED THUS # 1 LETTERS)

ALL SHARP EDGES AND CORNERS TO BE REMOVED UNLESS OTHERWISE STATED MACHINED CORNERS TO HAVE R OUT SIDE R INSIDE EQUIVALENT CHAMFERS ARE PERMISSIBLE

ISSUE	DATE	NATURE OF AMENDMENTS
B	20.09.12	7th ALTERATION COMMITTEE MEETING MINUTES POIT No. 6. DATE:- 11.04.2012.
A	21.9.93	AUTHY. NOTN. No. BK 85-743

DRN
CHD
TCD
APPD
DATE 27-5-89
SCALE:- 1:1
DIMENSIONS IN mm
TOLERANCE ON DIMNS UNLESS OTHERWISE STATED IS:2102-69
ALL THREADS TO CONFORM TO

MATERIAL:- PARONITE ПОН 0.6 GOST 481-80

USED ON СБ 327-00-45

CONTROLLERATE OF QUALITY ASSURANCE (HEAVY VEHICLES) AVADI

TITLE GASKET

D S CAT NUMBER

DRAWING NUMBER 327 176

KVD NO 785077

SIZE A3

20-27

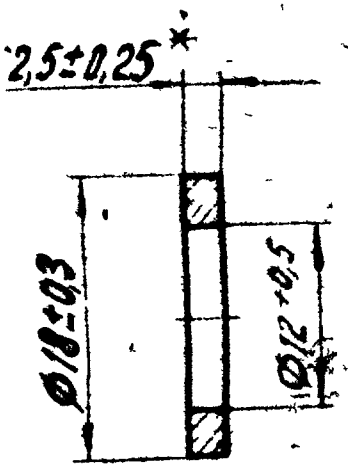

1. DIMENSIONS ARE PROVIDED WITH TOOLS

2 * DIMENSION IS GIVEN FFOR REFERENCE.

* CB 327-00-45

PILOT SAMPLE SHOULD BE APPROVED BY A H S P BEFORE BULK PRO[illegible]N

ISSUE	DATE	NATURE OF AMENDMENTS	
DRN		SCALE - 2 : 1	
CHD		DIMENSIONS IN [illegible]	
TCD		TOLERANCE ON DIMNS UNLESS OTHERWISE STATED	
APPD			
DATE	24-04-87	ALL THREADS CONFORM TO	

EST MASS 0 0004 Kg

TO BE STAMPED OR MARKED WHERE INDICATED THUS # (LETTERS)

ALL SHARP EDGES AND CORNERS TO BE REMOVED UNLESS OTHERWISE STATED MACHINED CORNERS TO HAVE R OUTSIDE R INSIDE EQUIVALENT CHAMFERS ARE PERMISSIBLE

MATERIAL - FIBRE ΦT 2 5 GOST 14613-69

USED ON - CB 3327-[illegible] T/-2 * CB 327-07-1

CONTROLLERATE OF INSPECTION (HEAVY VEHICLES) AVADI

TITLE - GASKET 2.5 mm or 1.5mm

D S CAT NUMBER

DRAWING NUMBER 329-31A

ECKД

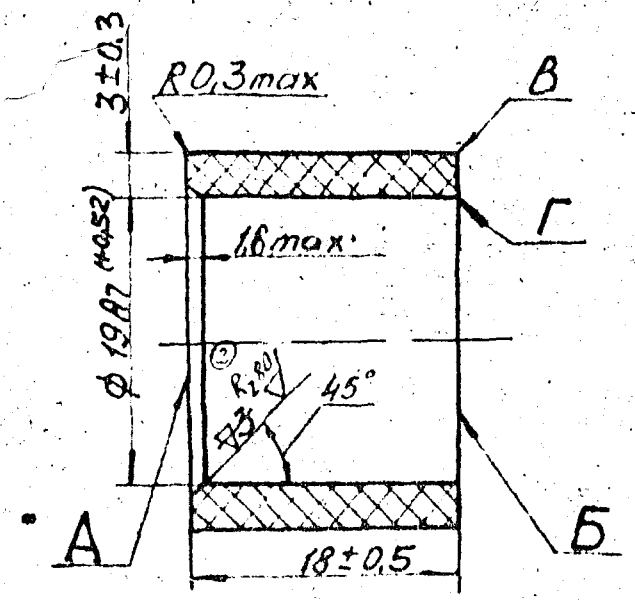

1. PROTECTIVE BUSHING TAPER WITHIN A TOLERANCE LIMIT IS PERMITTED.
2. NON PARALLELISM OF SURFACES A AND Б SHOULD BE 0.1 mm MAXIMUM; IT IS ENSURED BY TOOL.
3. MATERIAL MAY BE SUBSTITUTED BY PHENOLIC PLASTIC OF GRADES 01-040-02, 01-030-02, GOST 5689-79.
4. 0.5 x 0.5 mm CHIPPINGS ALL AROUND THE EDGES "B" AND "Г" ARE PERMITTED.
5. OTHER TECHNICAL REQUIREMENTS AS PER TY 6-05-1538-77.
6. THE PART IN TROPICAL VERSION SHOULD BE MADE FROM PHENOLIC PLASTIC B x I - 090 - 34 OR B x 3 - 090 - 14 GOST 5089-79 AND BE MARKED WITH "T" LETTER OR WITH YELLOW OR WHITE SPOT.

PILOT SAMPLE SHOULD BE APPROVED A H S P BEFORE BULK PRODUCTION

			EST. MASS 0.0052 kg	☐ BE STAMPED OR MARKED WHERE INDICATED THUS ✱ LETTERS)
			ALL SHARP EDGES AND CORNERS TO BE REMOVED UNLESS OTHERWISE STATED MACHINED CORNERS TO HAVE R OUTSIDE R INSIDE EQUIVALENT CHAMFERS ARE PERMISSIBLE	
ISSUE	DATE	NATURE OF AMENDMENTS		
DRN GNS		SCALE - 2 : 1	MATERIAL: PHENOLIC PLASTIC 03-010-02 GOST 5689-79	USED ON:- СБ 3335-00-~~24~~ 33 СБ 447-00-1 СБ 327-00-45
CHD		DIMENSIONS IN mm	CONTROLLERATE OF INSPECTION (HEAVY VEHICLES) AVADI	
TCD GNS		TOLERANCE ON DIMNS UNLESS OTHERWISE STATED	TITLE:- PROTECTIVE BUSHING	
APPD				
DATE 9-1-87		ALL THREADS CONFORM TO	D S CAT NUMBER	DRAWING NUMBER 340-23Г

ЕСКД

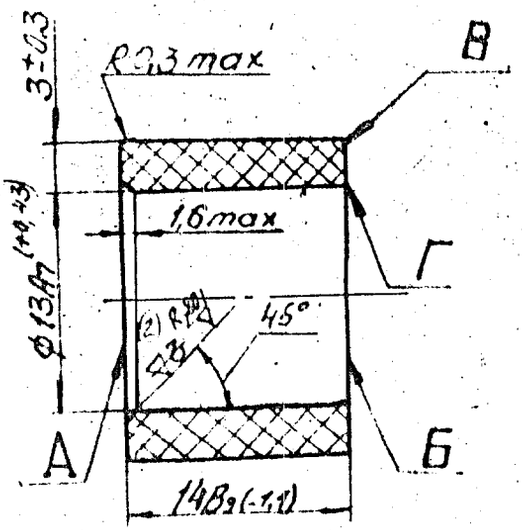

340-24..

1. PROTECTIVE BUSHING TAPER WITHIN A TOLERANCE LIMIT IS PERMITTED.
2. NON PARALLELISM OF SURFACES A AND SHOULD BE 0.1mm MAXIMUM; IT IS ENSURED BY TOOL.
3. MATERIAL MAY BE SUBSTITUTED BY PHENOLIC PLASTIC OF GRADES 01-040-02, 01-030-02, GOST 5689-79.
4. 0.5 x 0.5 mm CHIPPINGS ALL AROUND THE EDGES "B" AND "Г" ARE PERMITTED.
5. OTHER TECHNICAL REQUIREMENTS AS PER TY 6-05-1538-77.
6. THE PART IN TROPICAL VERSION SHOULD BE MADE FROM PHENOLIC PLASTIC B x I - 090 - 34 OR B x 3 - 090 - 14 GOST 5089 - 79 AND BE MARKED WITH "T" LETTER OR WITH YELLOW OR WHITE SPOT.

PILOT SAMPLE SHOULD BE APPROVED BY A H S P BEFORE BULK PRODUCTION

ISSUE	DATE	NATURE OF AMENDMENTS	
DRN		SCALE - 2:1	
CHD		DIMENSIONS IN mm	
TCD		TOLERANCE ON DIMNS UNLESS OTHERWISE STATED	
APPD			
DATE	7.1.87	ALL THREADS CONFORM TO	

EST. MASS 0.0038 Kg

TO BE STAMPED OR MARKED WHERE INDICATED THUS # LETTERS)

ALL SHARP EDGES AND CORNERS TO BE REMOVED UNLESS OTHERWISE STATED MACHINED CORNERS TO HAVE R OUTSIDE R INSIDE EQUIVALENT CHAMFERS ARE PERMISSIBLE.

MATERIAL:- PHENOLIC PLASTIC 03-010-02 PLASTIC GOST 5689-79

USED ON:- СБ 327-00-45 СБ 3335-00-24

CONTROLLERATE OF INSPECTION (HEAVY VEHICLES) AVADI

TITLE:- PROTECTIVE BUSHING

D S CAT NUMBER

DRAWING NUMBER 340-24-1Г

Инв. № подл. | Подпись и дата | Взам. инв. № | Инв. № дубл. | Подпись и дата

2662

DRAWING NUMBER
351-06

Rz40 (✓)

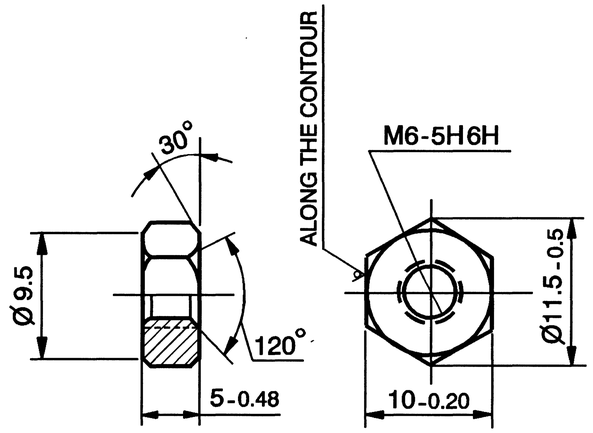

SCALE 1 : 1

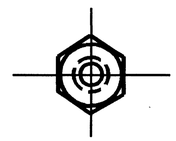

1. } DELETED
2. }
3. THE THREAD MAY BE CHECKED BEFORE COATING.
4. DELETED.
5. COATING : Cd9, CHROMATIZING, AS PER ЧЦЛ-104 WITH ELIMINATION OF HYDROGEN EMBRITTLEMENT.
6. THE REST OF THE TECHNICAL REQUIREMENTS AS PER STANDARD 82052-00.
7. ALTERNATE MATERIAL : STEEL GRADES 40 AND 50 GOST 1050-74. ROLLED STOCK OF GROUP 'B' CLASS 4, GOST 1051-73 MAY BE USED.
8. TO ENSURE HIGH QUALITY OF COATING, IT IS ALLOWED TO ELIMINATE SURFACE DEFECTS OF ROLLED STOCK WITH DECREASE OF DIMENSION AS PER ACCURACY CLASS 5.

(A)

(C) MATERIAL : STEEL 709 M40 (EN 19) TO BS: 970. Pt-I - 1983.

(E) Cb 327-00-47-01
(D) CQA(HV)5.06.607E
(B) Cb 20-08-00-7
(G) ~~Cb 20-32-00-4~~
Cb 20-23-34-6
Cb 20-23-33-6
Cb 20-22-00-7
Cb 20-12-01-13
Cb 20-11-01-9
Cb 20-09-07
Cb 20-06-13-6
Cb 20-06-12-6
Cb 20-01-00-8
Cb 20-05-47-4

(G) ~~Cb 401-10~~
~~Cb 407-7~~
Cb 3320-00-33
Cb 3335-00-9
Cb 315-606-12
Cb 3308-00-23
Cb 3308-00-17
Cb 3334-00-47
Cb 3320-00-43
Cb 406-13-75
Cb 406-13-44
Cb 315-777-2

Cb 406-13-77 (G)
Cb 406-12-77
Cb 3335-00-33 (F)
(A) Cb 20-27-004
Cb 310-00-14
Cb 406-12-75
Cb 406-12-44
Cb 337-100
Cb 327-00-73
Cb 3308-15-2
Cb 3301-00-44
Cb 3301-00-37
(G) ~~Cb 3085-00-16~~
Cb 447-00-1
Cb 3338-401-10
(G) ~~Cb 3338-404-7~~
~~Cb 3335-00-30~~ (F)

PILOT SAMPLE SHOULD BE APPROVED BEFORE BULK PRODUCTION.

EST. WT. 0.0025 Kg

TO BE STAMPED OR MARKED WHERE INDICATED THUS # (LETTERS)

ALL SHARP EDGES AND CORNERS TO BE REMOVED UNLESS OTHERWISE STATED MACHINED CORNERS TO HAVE R OUT-SIDE R INSIDE EQUIVALENT CHAMFERS ARE PERMISSIBLE.

ISSUE	DATE	NATURE OF AMENDMENTS
G	04.01.20	USED ON NUMBER ADDED.
F	20.09.19	USED ON NUMBER ADDED.
E	06.08.19	USED ON NUMBER ADDED.
D	15.07.15	Pt.11 of 7th Alt. Comm. Meeting Dt.11.4.12
C	09.06.09	3 rd ALTN. COMM. MINUTES POINT 5 DATE 27.02.09
B	25.08.08	USED ON NUMBER ADDED.
A	05.9.92	EFA Lt.07263/ENG/PDO/395-4 dt.29.8.92

DRN	Sd/=
CHD	Sd/=
APPD	Sd/=
DATE	09.04.86
SCALE:-	2 : 1
DIMENSIONS IN mm	
TOLERANCE ON DIMNS UNLESS OTHERWISE STATED IS : 2102 - 69	
ALL THREADS TO CONFORM TO	

MATERIAL :- ~~HEXAGON BAR~~
(C) ~~10-4 GOST 8560-78~~
~~45-8 GOST 1051-73~~

USED ON :- Cb 3342-188-3Cb
Cb 315-606-5 ~~Cb 327-00-45~~ (E)
Cb 402-93-1

CONTROLLERATE OF QUALITY ASSURANCE (HEAVY VEHICLES) AVADI

TITLE :- NUT M6

D S CAT NUMBER

DRAWING NUMBER 351-06

N. S (N SARAVANAN) SSO-I Dt. 28 Aug 2019

DRG. RE-INDIANIZED BASED ON RUSSIAN ORIGINAL ISSUE - NIL.
COMMON TO UTD-20, V46-6 & V-92S2 ENGINES
KVD No. 78016

A11
SIZE A3

EFA_15 Dec 2021

DRAWING NUMBER
353-04-1

Rz80 (√)

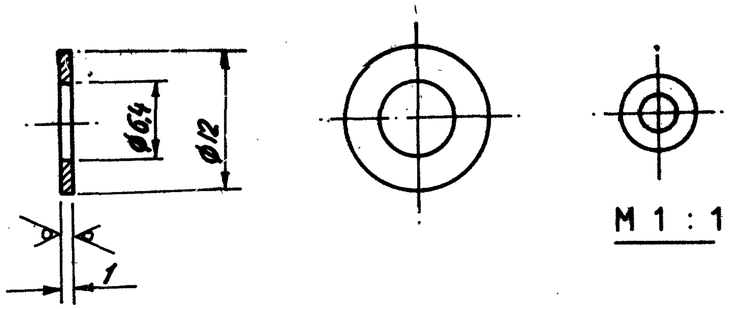

1. DIMENSIONS WITH UNSPECIFIED TOLERANCES - AS PER STANDARD 82050-16.
2. THE COMPONENT SHOULD BE STRAIGHTENED AFTER STAMPING.
3. BURRS ARE NOT ALLOWED.
4. COATING: CADIUM 9, CHROMATIZING AS PER ЦУЛ-104 WITH ELIMINATION OF HYDROGEN EMBRITTLEMENT.
5. ALTERNATE MATERIAL: STEEL GRADES 15, 08пс GOST 1050-74.
6. REQUIRED FINISHING OF SURFACES BEING STAMPED SHOULD BE ENSURED BY TOOL.

(A) EQUIVALENT MATERIAL
Gr. O IS:513-1994

EXPLANATORY NOTE :

7. REFERENCE MATERIAL QUOTED:
COLD ROLLED LOW CARBON STEEL STRIP HIGHLY COLD WORKED 'BH' CONDITION SURFACE QUALITY '2' 1mm THICK TO GOST 503-81 AND MANUFACTURED IN ACCORDANCE WITH QUALITY CARBON STRUCTURAL STEEL GRADE 10 AND REFERENCE NOTE 5. ON ALTERNATE MATERIAL STEEL GRADES 15 AND 08пс TO GOST 1050-74.

a) CHEMICAL COMPOSITION:

GRADE OF STEEL	CONTENT OF ELEMENTS %						REMARKS
	C	Si	Mn	Cr	S	P	
				MAXIMUM			
10	0.07-0.14	0.17-0.37	0.35-0.65	0.15	0.040	0.035	Ref.Matl
15	0.12-0.19	0.17-0.37	0.35-0.65	0.25	0.040	0.035	Alt.Matl
08пс	0.05-0.11	0.05-0.17	0.35-0.65	0.10	0.040	0.035	Alt.Matl

RESIDUAL CONTENT OF COPPER AND NICKEL SHOULD NOT EXCEED 0.25% EACH. MANGANESE CONTENT UPTO 0.25% AS REGARDS LOWER LIMIT IS ALLOWED IN THE STEEL OF GRADE 08пс MEANT FOR PRODUCTION OF SHEET STEEL FOR COLD STAMPING.

b) MECHANICAL PROPERTIES AS PER GOST 503-81

GRADE OF STEEL	CONDITION OF MATERIAL	ULTIMATE TENSILE STRENGTH Kgf/mm²	ELONGATION
10	BH	55 MIN	—

c) MECHANICAL PROPERTIES AS PER GOST 16523-70 FOR ALTERNATE MATERIAL QUOTED.

GRADE OF STEEL	ULTIMATE TENSILE STRENGTH Kgf/mm²	ELONGATION %
15	34 - 47	24
08пс	28 - 40	25

Cb 411-00-56 (F)
Cb 3308-00-23
Cb 3308-00-17 (E)
Cb 327-00-73
(D) Cb 327-00-47-01

Cb 20-01-00-8
Cb 20-11-05-2
Cb 20-06-00-4
Cb Y 36-11-07-01
Cb 3338-00-16
CB 3338-401-10
CB 3338-404-7
CQA(HV)5.06.001E (B) (C)
CQA(HV)5.06.607E

PILOT SAMPLE SHOULD BE APPROVED BY A H S P BEFORE BULK PRODUCTION.

EST WT	TO BE STAMPED OR MARKED WHERE INDICATED THUS #
0.00063 Kg	(LETTERS)

ALL SHARP EDGES AND CORNERS TO BE REMOVED UNLESS OTHERWISE STATED MACHINED CORNERS TO HAVE R OUTSIDE R INSIDE EQUIVALENT CHAMFERS ARE PERMISSIBLE

ISSUE	DATE	NATURE OF AMENDMENTS
F	23.11.21	USED ON NUMBER ADDED.
E	16.08.21	USED ON NUMBER ADDED.
D	17.7.19	USED ON NUMBER ADDED.
C	15-7-15	Pt. 11 of 7th Alt. Comm. Meeting Dt. 11-4-12
B	18-3-15	Pt. 11 of 7th Alt. Comm. Meeting Dt. 11-4-12
A	19-5-10	4th Alt.Comm.Mt.Minutes Pt.No.2 Dt.26.10.09

DRN
CHD
TCD
APPD
DATE 25.3.86
SCALE: 2 : 1
DIMENSIONS IN mm
TOLERANCE ON DIMNS UNLESS OTHERWISE STATED IS : 2102-69
ALL THREADS TO CONFORM TO

MATERIAL:
STRIP 10 - BH - 2 - 1 / GOST 503-71

USED ON: CB 3342-188-3 CB 315-663-21 ~~CB 327-00-47-2~~ CB 411-00-48 CB 447-00-1

CONTROLLERATE OF INSPECTION (HEAVY VEHICLES) AVADI

TITLE:
WASHER BRIGHT 6

D S CAT NUMBER

DRAWING NUMBER
353 04 1

COMMON TO V46-6 & V92S2

(A-11)

SIZE A3

DRAWING NUMBER
353-04-1

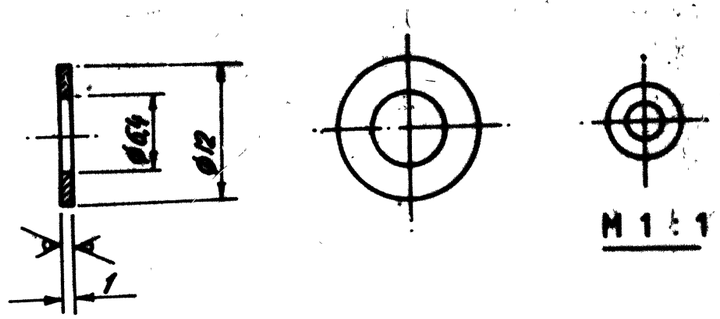

1. DIMENSIONS WITH UNSPECIFIED TOLERANCES - AS PER STANDARD 82050-16.
2. THE COMPONENT SHOULD BE STRAIGHTENED AFTER STAMPING.
3. BURRS ARE NOT ALLOWED.
4. COATING: CADIUM 9, CHROMATIZING AS PER ЦУЛ-104 WITH ELIMINATION OF HYDROGEN EMBRITTLEMENT.
5. ALTERNATE MATERIAL: STEEL GRADES 15, 08пс GOST 1050-74.
6. REQUIRED PROSHING OF SURFACES BEING STAMPED SHOULD BE ENSURED BY TOOL.

(A) EQUIVALENT MATERIAL
Gr. 0 IS:513-1994

EXPLANATORY NOTE :

1. REFERENCE MATERIAL QUOTED:
COLD ROLLED LOW CARBON STEEL STRIP HIGHLY COLD WORKED 'BH' CONDITION SURFACE QUALITY '2' 1mm THICK TO GOST 503-81 AND MANUFACTURED IN ACCORDANCE WITH QUALITY CARBON STRUCTURAL STEEL GRADE 10 AND REFERENCE NOTE 5. ON ALTERNATE MATERIAL STEEL GRADES 15 AND 08пс TO GOST 1050-74.

a) CHEMICAL COMPOSITION:

GRADE OF STEEL	CONTENT OF ELEMENTS %						REMARKS
	C	Si	Mn	Cr	S	P	
				MAXIMUM			
10	0.07-0.14	0.17-0.37	0.35-0.65	0.15	0.040	0.035	Ref Melt
15	0.12-0.19	0.17-0.37	0.35-0.65	0.25	0.040	0.035	Air Melt
08пс	0.05-0.11	0.05-0.17	0.35-0.65	0.10	0.040	0.035	Air Melt

RESIDUAL CONTENT OF COPPER AND NICKEL SHOULD NOT EXCEED 0.25% EACH.
MANGANESE CONTENT UPTO 0.25% AS REGARDS LOWER LIMIT IS ALLOWED IN THE STEEL OF GRADE 08пс MEANT FOR PRODUCTION OF SHEET STEEL FOR COLD STAMPING.

b) MECHANICAL PROPERTIES AS PER GOST 503-81

GRADE OF STEEL	CONDITION OF MATERIAL	ULTIMATE TENSILE STRENGTH Kgf/mm²	ELONGATION
10	BH	55 MIN	—

c) MECHANICAL PROPERTIES AS PER GOST 16523-70 FOR ALTERNATE MATERIAL QUOTED.

GRADE OF STEEL	ULTIMATE TENSILE STRENGTH Kgf/mm²±	ELONGATION %
15	34 - 47	24
08пс	28 - 40	25

Cb 20-01-00-8
Cb 20-11-05-2
Cb 20-06-00-4
Cb Y 36-11-07-01
Cb 3338-00-16
CB 3338-401-10
CB 3338-404-7
CQA(HV)5.06.001E (B)
CQA(HV)5.06.607E (C)

PILOT SAMPLE SHOULD BE APPROVED BY A H S P BEFORE BULK PRODUCTION.

EST WT	TO BE STAMPED OR MARKED WHERE INDICATED THUS # (LETTERS)
0.00063 Kg	

ALL SHARP EDGES AND CORNERS TO BE REMOVED UNLESS OTHERWISE STATED MACHINED CORNERS TO HAVE R OUTSIDE R INSIDE EQUIVALENT CHAMFERS ARE PERMISSIBLE

ISSUE	DATE	NATURE OF AMENDMENTS
C	15-7-15	Pt. 11 of 7th Alt. Comm. Meeting Dt. 11-4-12
B	18-3-15	Pt. 11 of 7th Alt. Comm. Meeting Dt. 11-4-12
A	19-5-10	4th Alt.Comm.Mt.Minutes Pt.No.2 Dt.26.10.09

DRN
CHD
TCD
APPD
DATE 25.3.
SCALE: 2 : 1
DIMENSIONS IN mm
TOLERANCE ON DIMNS UNLESS OTHERWISE STATED IS : 2102-69
ALL THREADS TO CONFORM TO

MATERIAL:
STRIP 10 - BH - 2 - 1
GOST 503-71

USED ON: CB 3342-188-3 CB 315-663-21 CB 411-00-48 CB 447-00-1

CONTROLLERATE OF INSPECTION (HEAVY VEHICLES) AVADI

TITLE: WASHER BRIGHT 6

D S CAT NUMBER

DRAWING NUMBER 353 04 1

SIZE A3

EFA_15 Dec 2021

DRAWING NUMBER
353-23

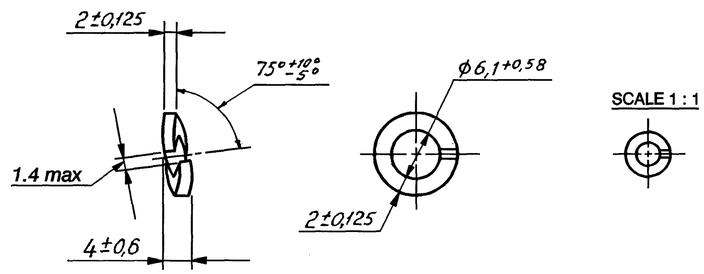

1. COATING: CADMIUM 9 CHROMATIZING AS PER ЧЦЛ-104 ELIMINATION OF HYDROGEN EMBRITTLEMENT.
2. WASHER 6T.65G 09 GOST 6402-70 MAY BE USED.

EXPLANATORY NOTE

3. REFERENCE MATERIAL QUOTED:

SPRING WASHER NOMINAL THREAD DIA 6 mm, HEAVY WASHER " T " PARKERISED AND OILED 0.6 AND REFERENCE NOTE " 2 " ON ALTERNATE MATERIAL ZINC PLATED 09 TO GOST 6402-70 AND MANUFACTURED IN ACCORDANCE WITH CARBON STRUCTURAL HOT ROLLED STEEL GRADE 65 G TO GOST 1050-74.

a) CHEMICAL COMPOSITION :

GRADE OF STEEL	CONTENT OF ELEMENTS %					
	C	Si	Mn	Cr	S	P
				MAXIMUM		
65G	0.62 - 0.70	0.17 - 0.37	0.90 - 1.20	0.25	0.040	0.35

RESIDUAL CONTENT OF COPPER AND NICKEL SHOULD NOT EXCEED 0.25% EACH

b) MECHANICAL PROPERTIES UNDER NORMALISED CONDITION: AS PER GRADE 65G, 1050-74.

GRADE OF STEEL	ULTIMATE TENSILE STRENGTH Kgf/mm² (MIN)	YIELD POINT Kgf/mm² (MIN)	ELONGATION % (MIN)	HARDNESS BHN MAX
65G	75	44	9	285

(A) Cb 327-00-73
Cb 3334-00-47
Cb 3335-00-9
Cb 337-100
Cb 3301-00-44
Cb 406-13-75
~~Cb 010-00-44~~ (G)
Cb 3320-00-43
Cb 406-12-75
Cb 3308-15-2
Cb 411-00-56
Cb 315-606-12
Cb 406-12-44
Cb 3300-00-27 CX
Cb 3308-00-17
~~Cb 3335-00-24~~ (F)
Cb 406-13-44
Cb 3301-00-37
Cb 3320-00-33

Cb 411-00-48 (H)
Cb 406-13-77 (G)
Cb 406-12-77
Cb 3335-00-33 (F)
(E) Cb 327-00-47-01
(D) CQA(HV)5.06.607E
(C) CQA(HV)5.06.001E

* Cb 20-23-34~~5~~6
Cb 20-23-33-6
Cb 20-22-00-7
Cb 20-15-671
Cb 20-06-13-6
Cb 20-15-663-4
Cb 20-06-12-6
Cb 20-06-00-2
Cb 20-01-00-8

Cb 3338-00-16 *
Cb 3338-401-10
Cb 3338-404-7
Cb 3342-00-8Cb
Cb 3342-188-3Cb
Cb 315-606-5
~~Cb 327-00-45~~ (E)

(B) EQUIVALENT MATERIAL 75C6 TO IS: 2507/EN42J BS: 970

PILOT SAMPLE SHOULD BE APPROVED BEFORE BULK PRODUCTION.

EST. WT. 0.801 Kg

TO BE STAMPED OR MARKED WHERE INDICATED THUS # (LETTERS)

ALL SHARP EDGES AND CORNERS TO BE REMOVED UNLESS OTHERWISE STATED MACHINED CORNERS TO HAVE R OUT-SIDE R INSIDE EQUIVALENT CHAMFERS ARE PERMISSIBLE.

ISSUE	DATE	NATURE OF AMENDMENTS
H	19.11.21	USED ON NUMBER ADDED.
G	04.01.20	USED ON NUMBER ADDED.
F	20.09.19	USED ON NUMBER ADDED.
E	08.08.19	USED ON NUMBER ADDED.
D	15.07.15	Pt.11 of 7th Alt. Comm. Meeting Dt.11.4.12
C	18.03.15	Pt.11 of 7th Alt. Comm. Meeting Dt.11.4.12
B	16.08.10	4 th Alt. Comm. Meeting Minutes. Point No.12 Dt. 26.10.09
A	28.8.08	USED ON NUMBER ADDED.

DRN	Sd/=
CHD	Sd/=
APPD	Sd/=
DATE	25.03.86
SCALE:-	2 : 1
DIMENSIONS IN mm	
TOLERANCE ON DIMNS UNLESS OTHERWISE STATED IS : 2102 - 69	
ALL THREADS TO CONFORM TO	

MATERIAL :- 65G 06 GOST 6402-70

USED ON :- Cb 447-00-1 *
Cb 402-93-1
~~Cb 411-00-41~~ (G)

CONTROLLERATE OF QUALITY ASSURANCE (HEAVY VEHICLES) AVADI

TITLE :- WASHER 6T

D S CAT NUMBER

DRAWING NUMBER 353-23

N. J. (N SARAVANAN) SSO-I Dt. 28 Aug 2019

DRG. RE - INDIANISED BASED ON RUSSIAN ORIGINAL ISSUE - NIL.

COMMON TO V-92S2, V46-6 & UTD-20.

KVD No.63632

A11

SIZE A2

DRAWING NUMBER
353-28

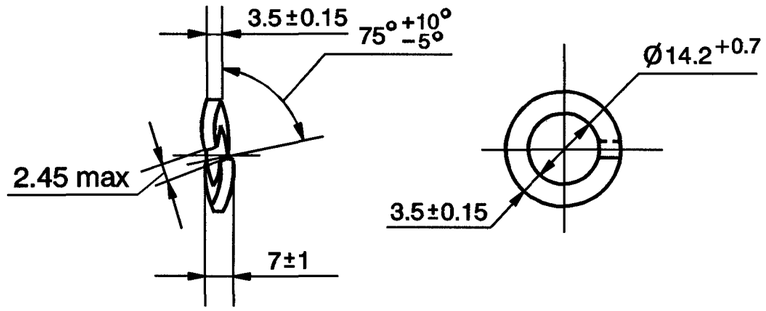

EXPLANATORY NOTE

MATERIAL QUOTED : 14 - N - 65 Г 06 GOST 6402-70

14 : INTERNAL DIAMETER OF WASHER

N : MEDIUM WASHER WIDTH - 3.5 ±0.125

65Г : GRADE OF STEEL AS PER GOST 1050-74

06 : PARKERISING FOLLOWED BY OILING

CHEMICAL COMPOSITION : AS PER GOST 1050-74.

CONTENT OF ELEMENTS %							
C	Si	Mn	Cr	S	P	Cu	Ni
			MAXIMUM				
0.62 - 0.70	0.17 - 0.37	0.90 - 1.20	0.25	0.040	0.035	0.25	0.25

WEIGHT OF STEEL WASHERS AND THEIR RESILIENCE PROPERTIES AS PER GOST 6402-70.

1. COATING: CHEMICAL OXIDIZING, OIL FINISHING.

MECHANICAL PROPERTIES : AS PER GRADE 65 Г GOST 1050-74.

YIELD POINT Kgf/mm² (min) . . . . . = 44

ULTIMATE TENSILE STRENGTH Kgf/mm² (min) = 75

ELONGATION % (min) . . . . . = 9

Ⓐ EQUIVALENT MATERIAL : 75C6 TO IS: 2507/EN4J BS:970

Cb 3312-00-22
Cb 3312-00-15 Ⓓ
Cb 3312-90-9
Cb 411-00-56 Ⓒ
Cb 327-00-73
* Cb 327-00-47-01 Ⓑ

PILOT SAMPLE SHOULD BE APPROVED BEFORE BULK PRODUCTION.

EST. WT. 5.355 Kg

TO BE STAMPED OR MARKED WHERE INDICATED THUS # (LETTERS)

ALL SHARP EDGES AND CORNERS TO BE REMOVED UNLESS OTHERWISE STATED MACHINED CORNERS TO HAVE R OUT-SIDE R INSIDE EQUIVALENT CHAMFERS ARE PERMISSIBLE.

ISSUE	DATE	NATURE OF AMENDMENTS
D	04.01.22	USED ON NUMBER ADDED.
C	19.11.21	USED ON NUMBER ADDED.
B	06.08.19	USED ON NUMBER ADDED.
A	16.08.10	4 th Alt. Comm. Meeting Minutes. Point No.12 Dt. 26.10.09

DRN	Sd/=
CHD	Sd/=
APPD	Sd/=
DATE	09.03.86
SCALE:-	1 : 1

DIMENSIONS IN mm

TOLERANCE ON DIMNS UNLESS OTHERWISE STATED IS : 2102 - 69

ALL THREADS TO CONFORM TO

MATERIAL :- 14 N 65 Г 06 GOST 6402-70

USED ON :- Cb 411-00-48 ~~Cb 327-00-45~~ *

CONTROLLERATE OF QUALITY ASSURANCE (HEAVY VEHICLES) AVADI

TITLE :- SPRING WASHER

D S CAT NUMBER

DRAWING NUMBER 353-28

DRG. RE-INDIANIZED BASED ON RUSSIAN ORIGINAL ISSUE - NIL.
COMMON TO V46-6 & V92S2 ENGINES
KVD No. 78688

(N SARAVANAN)
SSO-I
Dt. 28 Aug 2019

A11
SIZE A3

DRAWING NUMBER
354-17

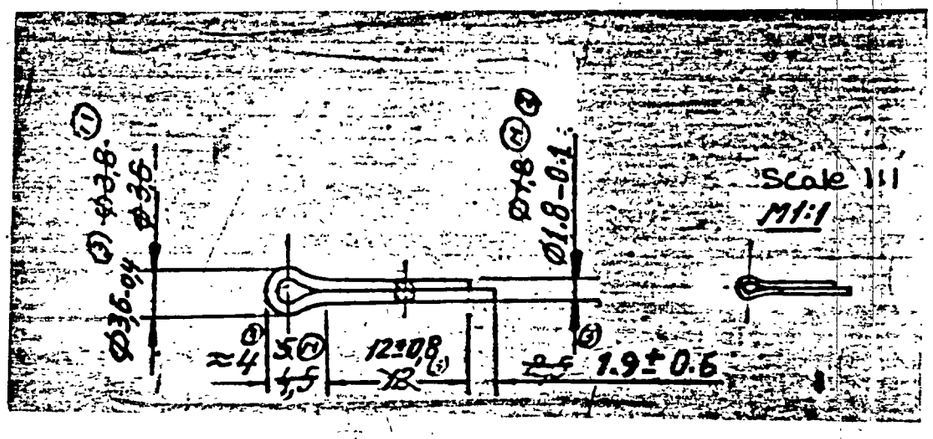

1. TO BE ANNEALED.
2. COATING : Cd 3, CHROMATIZING AS PER ЧУЛ - 104 WITHELIMINATION OF HYDROGEN EMBRITTLEMENT
3. BURRS, CRACKS, RUST ARE NOT ALLOWED ON THE SURFACE OF THE PIN AND SHARP CUT ON THE BENDED HEAD ARE ALSO NOT ALLOWED.
4. PINS OF DIAMETER UPTO 5mm MUST WITHSTAND 3 BENDS WITH OUT ANY SIGN OF BREAKING.

EXPLANATORY NOTE:

MATERIAL QUOTED:- LOW CARBON STEEL WITH MAXIMUM CARBON CONTENT 0.20% TO GOST 1050-74. (GRADE 15 GOST 1050-74 PREFERRED).

CHEMICAL COMPOSITION: FOR GRADE 15 TO GOST 1050-74.

CONTENT OF ELEMENTS %							
C	Si	Mn	Cr	P	S	Cu	Ni
			MAXIMUM				
0·12 - 0·19	0·17-0·37	0·35-0·65	0·25	0·035	0·040	0·25	0·25

MECHANICAL PROPERTIES:

YIELD POINT Kgf/mm²	ULTIMATE TENSILE STRENGTH Kgf/mm²	ELONGATION %	REDUCTION OF AREA %	HARDNESS BHN
MINIMUM				MAXIMUM
23	38	27	55	149

** LOW CARBON STEEL WITH MAXIMUM CONTENT 0.20%. GOST 1050-74.

(A) EQUIVALENT MATERIAL IS: 549.

PILOT SAMPLE SHOULD BE APPROVED BY A H S P BEFORE BULK PRODUCTION

EST. WT. 1000 PIECES 0.324 Kg

TO BE STAMPED OR MARKED WHERE INDICATED THUS # (LETTERS)

ALL SHARP EDGES AND CORNERS TO BE REMOVED UNLESS OTHERWISE STATED MACHINED CORNERS TO HAVE R OUT SIDE R INSIDE EQUIVALENT CHAMFERS ARE PERMISSIBLE

ISSUE	DATE	NATURE OF AMENDMENTS
		4th ALT. COMM. Mtg. MINUTES POINT No 3 DT. 26-10-09

DRN
CHD
TCD
APPD
DATE 4-5-86
SCALE:- 2 : 1
DIMENSIONS IN mm
TOLERANCE ON DIMNS UNLESS OTHERWISE STATED IS:2102-69
ALL THREADS TO CONFORM TO

MATERIAL:- ** SEE ABOVE

USED ON
CG 315-663-21
CG 322-00-45

CONTROLLERATE OF QUALITY ASSURANCE (HEAVY VEHICLES) AVADI

TITLE
COTTER PIN 2x12

D S CAT NUMBER

DRAWING NUMBER
354-17

KVD No: 78701

A/11

SIZE A3

EFA_19 MAR 22

DRAWING NUMBER
354-22

(N SARAVANAN)
SSO-I
Dt. 22 Aug 2019

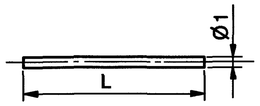

KVD No.	L mm	LIMIT DEVIATIONS mm	USED ON	
	50	± 1.5		
78705	60	± 1.5	Cb 3338-401-10, Cb 530-200	
78706	80	± 2	Cb 3334-00-39, ~~Cb 327-00-45~~ Cb 327-00-47-01 Cb 327-00-73	G
78707	100	± 2	Cb 3338-00-16 Cb 327-00-73 Cb 3335-00-33 ~~Cb 327-00-45, Cb 3335-00-24,~~ Cb 3342-00-8Cb	G H
78708 B C	120	± 2	Cb 419-00-4, Cb 310-00-7, Cb 20-22-00-7 Cb 322-00-4Cb	H
78709	150	± 2	Cb 327-00-47-01 Cb 327-00-73 Cb 3335-00-33 ~~Cb 327-00-45, Cb 3335-00-24~~ Cb 3334-00-27	G
78710	200	± 2	~~Cb 327-00-45,~~ Cb 3334-00-27 Cb 327-00-47-01 Cb 327-00-73	G
78711	260	± 3	Cb 3334-00-27, Cb 20-29-00-8	
A	300	± 3	Cb 3338-407-4, Cb 3329-00-13	
78712	350	± 3		
78713	420	± 3	Cb 411-00-41	
78714	500	± 3	~~Cb 327-00-45~~ Cb 327-00-47-01	G
	600	± 3.5		
	800	± 5		

ADDITIONAL REQUIREMENTS

FOR MANUFACTURE OF LOCK WIRE AS PER DRAWING 354-22

1. THE WIRE SHOULD BE PROVIDED WITH ZINC COATING. DIAMETER OF WIRE AFTER COATING SHOULD BE $1^{+0.06}_{-0.03}$ mm.
2. OVALITY OF WIRE SHOULD NOT EXCEED HALF OF THE TOLERANCE ON DIAMETER.
3. THE WIRE SHOULD BE MANUFACTURED FROM LOW CARBON ROLLED STEEL AS PER GOST 1050-74.
4. ULTIMATE RUPTURE STRENGTH OF ZINC PLATED WIRE SHOULD NOT BE LESS THAN 3.7 MPa (37 Kgf/mm^2).
5. THE WIRE SHOULD WITHSTAND NOT LESS THAN 7 BENDINGS THROUGH 100° AND NOT LESS THAN 25 TWISTINGS THROUGH 360°
6. THE SURFACE OF WIRE SHOULD NOT HAVE BLOW HOLES, CRACKS, MARKS, BACK FINS, OXIDE SPOTS, BURRS AND RUST THERE SHOULD NOT BE ANY UNCOATED AREAS ON THE WIRE.
7. ON WIRE FRACTURE, THERE SHOULD NOT BE ANY CRACKS, BACK FINS, FISSURES, BLISTERS, AND SHRINKAGE CAVITIES.
8. WIRE ZINC COATING SHOULD BE BOUND TO THE STEEL WHEN WOUND ON CYLINDER WITH DIAMETER EQUAL TO WIRE FIVE FOLD DIAMETER, THE WIRE SHOULD NOT HAVE ANY PEELINGS AND FISSURINGS OF ZINC COATING.

EXPLANATORY NOTE :-

REFERENCE MATERIAL QUOTED :- LOW CARBON STEEL TO GOST 1050-74.

CHEMICAL COMPOSITION %

GRADE	C	Si	Mn	Cr	P	S	Cu	Ni
				MAXIMUM				
15	0.12 - 0.19	0.17 - 0.37	0.35 - 0.65	0.25	0.035	0.040	0.25	0.25

MECHANICAL PROPERTIES

1. ULTIMATE TENSILE STRENGTH Kgf/mm^2 (min) = 38
2. YIELD POINT Kgf/mm^2 (min) . . . . . = 23
3. PERCENTAGE ELONGATION % (min) . . . . . = 27
4. REDUCTION IN AREA % (min) . . . . . = 55
5. HARDNESS BHN (MAX) . . . . . = 149

D ** ITEM USED IN VARIOUS LENGTHS ON VARIOUS ASSEMBLIES OF V46-6, V92-S2 & UTD-20 ENGINE.

E EQUIVALENT MATERIAL IS: 549.

Cb3334-08-2 L
Cb 3312-00-22
Cb 3312-00-15 K
Cb 3308-00-23
Cb 3308-00-17
Cb 310-44
Cb 310-00-7 J
CQA(HV)5.06.607E F
Cb 20-06-00-2

PILOT SAMPLE SHOULD BE APPROVED BEFORE BULK PRODUCTION.

EST. WT.	TO BE STAMPED OR MARKED WHERE INDICATED THUS # (LETTERS)
—	

ALL SHARP EDGES AND CORNERS TO BE REMOVED UNLESS OTHERWISE STATED MACHINED CORNERS TO HAVE R OUT-SIDE R INSIDE EQUIVALENT CHAMFERS ARE PERMISSIBLE.

ISSUE	DATE	NATURE OF AMENDMENTS
L	8.03.22	DC(II)No.CQA(HV)/ENGV46-6/C-0001/2022 Dt.5.2.22
K	04.01.22	USED ON NUMBER ADDED.
J	31.07.21	USED ON NUMBER ADDED.
H	20.09.19	USED ON NUMBER ADDED.
G	08.08.19	USED ON NUMBER ADDED.
F	15.7.15	Pt.11 of 7th Alt. Comm. Meeting Dt.11.4.12
E	08.7.10	4 th Alt. Comm. Meeting Minutes. Point No.3 Dt. 26.10.09
D	28.8.08	USED ON NUMBER ADDED.
C	30.6.01	AUTHY 90211/AHSP/ED dt. 27.3.01
B	15.1.02	AUTHY Lt.No. 110026 / IND-III / 509 dt. 12.1.02.
A	15.2.88	AUTHY NOTN No. BK 81-406

DRN	Sd/=
CHD	Sd/=
APPD	Sd/=
DATE	18.03.86
SCALE:-	—
DIMENSIONS IN mm	
TOLERANCE ON DIMNS UNLESS OTHERWISE STATED IS : 2102 - 69	
ALL THREADS TO CONFORM TO	

MATERIAL :- ———

USED ON :- Cb 20-35-00-5
Cb 3338-402-4Cb
SEE TABLE **

CONTROLLERATE OF QUALITY ASSURANCE (HEAVY VEHICLES)
AVADI

TITLE :- LOCK WIRE

D S CAT NUMBER

DRAWING NUMBER 354-22

DRG. RE - INDIANISED BASED ON RUSSIAN ORIGINAL ISSUE - NIL.

COMMON TO V46-6, V92S2 & UTD-20 ENGINES

SIZE A2

DRAWING NUMBER
355-06

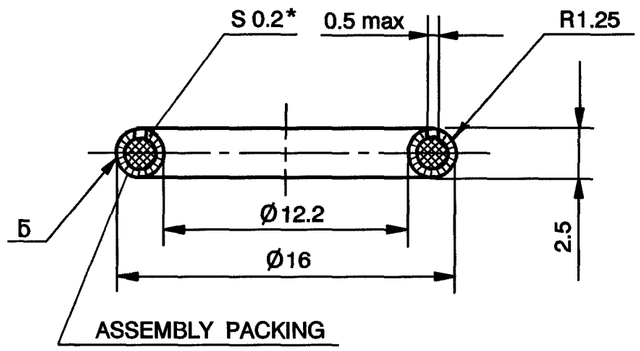

1. ALTERNATE MATERIAL IS STRIP 0.22 TO 0.3 mm THICK GOST 1173-77.
2. TOLERANCE ON ROUNDNESS SURFACE 'Б' SHOULD BE WITH IN THE DIAMETER TOLERANCE.
3. USED FOR PACKING IS ASBESTOS CORD ШАОН$_1$, GOST 1779-72.
4. RINGS SHOULD BE FILLED WITH PACKING TIGHTLY.
5. DISPLACEMENT OF SHEATHING EDGE FROM THE MEAN DIAMETER OF THE RING SHOULD NOT EXCEED 0.3 mm.
6. PROJECTION OF ONE EDGE OF SHEATHING WITH RESPECT TO THE OTHER ONE SHOULD NOT EXCEED 0.3 mm.
7. PROJECTION OF ASBESTOS FIBRE BEYOND THE SHEATHING JOINT IS PERMITTED. IF NEGLIGIBLE.
8. UNSPECIFIED LIMIT DEVIATIONS OF DIMENSIONS ARE AS FOLLOWS
   FOR HOLES - AS PER A7
   SHAFTS - AS PER B7
   OTHERS - AS PER CM7
9. MARK DESIGNATION DATE OF MANUFACTURE AND STAMP FINAL ACCEPTANCE SIGN ON THE TAG FOR BATCH OF PARTS.
10. * DIMENSIONS ARE GIVEN FOR REFERENCE.

EXPLANATORY NOTE

11. MATERIAL QUOTED : STRIP 0.2 M3 GOST 1173-77.

ALT. MATERIAL QUOTED : STRIP 0.22 TO 0.3 mm GOST 1173-77.
0.2 , 0.22 TO 0.3 mm THICKNESS OF THE STRIPS.
OF COPPER GRADE M3 AS PER GOST 859-78.

a) CHEMICAL COMPOSITION : (AS PER GOST 859-78)

BASIC CONSTITUENT Cu + Ag (min) = 99.5
Bi = 0.003 , Antimony = 0.05 , Arsenic = 0.01
Fe = 0.05 , Ni = 0.2 , Pb = 0.05 , Sn = 0.05
S = 0.01 , O_2 = 0.05.

b) MECHANICAL PROPERTIES : (AS PER GOST 1173-77)

MATERIAL CONDITION	TENSILE STRENGTH Kgf/mm^2	% ELONGATION
SOFT	20 (min)	30 (min)
HARD	30 (min)	3 (min)

* * (F) Cb 310-00-14
Cb 310-00-7
(E) ~~Cb 406-12-21~~
Cb 3300-00-27 CX
Cb 3320-00-33
(E) ~~Cb 406-13-21~~
(F) ~~Cb 310-00-1~~
Cb 20-01-00-8
~~Cb 3335-00-24~~ (D)
(E) ~~Cb 327-00-24~~
Cb 3335-00-33 (D)

(C) Cb 327-00-73
Cb 327-00-47-01
~~Cb 327-00-45~~
Cb 3329-00-13
Cb 20-20-00-10
Cb 20-10-00-4
(A) CQA(HV)5.07.502E
CQA(HV)5.07.504E
(B) CQA(HV)5.06.001E

PILOT SAMPLE SHOULD BE APPROVED BEFORE BULK PRODUCTION.

EST. WT. 100 PIECES 0.06 Kg

TO BE STAMPED OR MARKED WHERE INDICATED THUS # (LETTERS)

ALL SHARP EDGES AND CORNERS TO BE REMOVED UNLESS OTHERWISE STATED MACHINED CORNERS TO HAVE R OUT-SIDE R INSIDE EQUIVALENT CHAMFERS ARE PERMISSIBLE.

ISSUE	DATE	NATURE OF AMENDMENTS
F	31.07.21	USED ON NUMBER ADDED.
E	04.01.20	USED ON NUMBER DELETED.
D	20.09.19	USED ON NUMBER ADDED.
C	06.08.19	USED ON NUMBER ADDED.
B	18.3.15	Pt.11 of 7th Alt. Comm. Meeting Dt.11.4.12
A	05.3.14	AUTHY. Point No.11 of 7th Alt. Comm. Meeting at EFA

DRN	Sd/=
CHD	Sd/=
APPD	Sd/=
DATE	23.10.86
SCALE:-	4 : 1
DIMENSIONS IN mm	
TOLERANCE ON DIMNS UNLESS OTHERWISE STATED IS : 2102 - 69	
ALL THREADS TO CONFORM TO	

MATERIAL :- STRIP 0.2 M3 GOST 1173-77

USED ON :- * * SEE ABOVE

CONTROLLERATE OF QUALITY ASSURANCE (HEAVY VEHICLES) AVADI

TITLE :- RING 12 x 16

D S CAT NUMBER

DRAWING NUMBER 355-06

SIZE A3

A11

DRG. RE-INDIANIZED BASED ON RUSSIAN ORIGINAL ISSUE - NIL.
KVD No. 78715 COMMON TO UTD-20, V46-6 & V-92S2 ENGINES
(N SARAVANAN) SSO-I Dt. 28 Aug 2019

DRAWING NUMBER
355-08

EXPLANATORY NOTE

SCALE 5 : 1

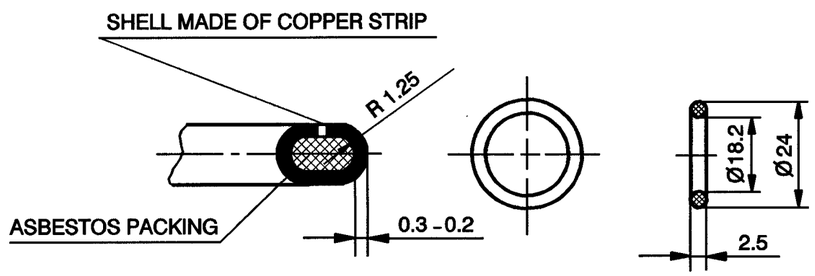

1. REFERENCE MATERIAL QUOTED:

COPPER ASBESTOS SEALING RING 18.2 mm I/D, 24 mm O/D AND MANUFACTURED IN ACCORDANCE WITH MH 4152-62.

a) COPPER SHEATHE RING :- SOFT COPPER BAND GRADE M3 TO GOST 859 - 78.

b) CORE :- BRAIDED ASBESTOS CORD MADE OF CHRYSOTILE.

c) CHEMICAL COMPOSITION AS PER GOST 859 - 78.

GRADE OF COPPER	CONTENT OF ELEMENTS %									
	COPPER & SILVER min	IMPURITIES MAXIMUM								
		Bi	Sb	AS	Fe	Ni	Pb	Sn	S	O
M3	99.5	0.003	0.05	0.01	0.05	0.2	0.05	0.05	0.01	0.08

(C) CQA(HV)5.06.001E

(B) CQA(HV)5.07.502E
CQA(HV)5.07.504E

* (A) Cb 3301-15-30
Cb 3320-00-33
Cb 20-01-00-8
Cb 3335-00-24
Cb 20-22-00-7
Cb 20-13-02-11
(D) Cb 3301-15-30-01

Cb 3301-00-44
Cb 3320-00-43
Cb 413-115-9
Cb 329-00-7
Cb 306-01-20
Cb 322-00-4
(E) ~~Cb 413-115-6~~
Cb 310-44
Cb 3301-15-44
Cb 337-100
Cb 3335-00-9
Cb 327-00-73
Cb 322-00-9

Cb 310-00-7 (H)
Cb 3335-00-33 (G)
Cb 327-00-47-01 (F)
Cb 447-00-1
Cb 329-00-7
Cb 310-31
Cb 306-02-20
Cb 406-17-2
Cb 406-16-2
Cb 3300-00-27 CX
~~Cb 3335-00-24-30~~ (G)
Cb 3338-404-7
346-01-3Cb
346-00Cb
176-32Cb

PILOT SAMPLE SHOULD BE APPROVED BEFORE BULK PRODUCTION.

EST. WT. 100 PIECES 0.14Kg

TO BE STAMPED OR MARKED WHERE INDICATED THUS # (LETTERS)

ALL SHARP EDGES AND CORNERS TO BE REMOVED UNLESS OTHERWISE STATED MACHINED CORNERS TO HAVE R OUT-SIDE R INSIDE EQUIVALENT CHAMFERS ARE PERMISSIBLE.

ISSUE	DATE	NATURE OF AMENDMENTS
H	31.07.21	USED ON NUMBER ADDED.
G	20.09.19	USED ON NUMBER ADDED.
F	06.08.19	USED ON NUMBER ADDED.
E	17.07.17	USED ON NUMBER DELETED.
D	23.02.16	USED ON NUMBER ADDED.
C	18.3.15	Pt.11 of 7th Alt. Comm. Meeting Dt.11.4.12
B	05.3.14	AUTHY. Point No.11 of 7th Alt. Comm. Meeting at EFA
A	28.8.08	USED ON NUMBER ADDED.

DRN	Sd/=
CHD	Sd/=
APPD	Sd/=
DATE	04.04.86
SCALE:-	1 : 1
DIMENSIONS IN mm	
TOLERANCE ON DIMNS UNLESS OTHERWISE STATED IS : 2102 - 69	
ALL THREADS TO CONFORM TO	

MATERIAL :-
M3 AND ASBESTOS

USED ON :- Cb 413-115-6
Cb 447-00-1 Cb 3329-01-11
~~Cb 327-00-45~~ (F)*

CONTROLLERATE OF QUALITY ASSURANCE (HEAVY VEHICLES) AVADI

TITLE :-
RING 18 x 24

D S CAT NUMBER

DRAWING NUMBER
355-08

DRG. RE-INDIANIZED BASED ON RUSSIAN ORIGINAL ISSUE - NIL.
COMMON TO V-92S2 & UTD-20 ENGINES

(N SARAVANAN)
SSO-I
Dt.28 Aug 2019

A11
SIZE A3

DRAWING NUMBER
356-64

Rz40 ▽(√)

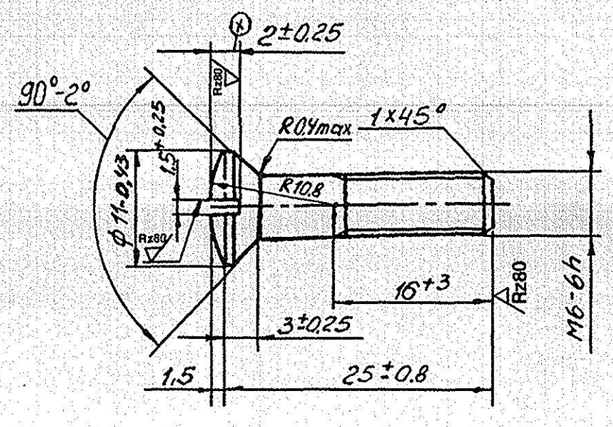

SCALE 1 : 1

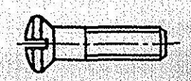

SKETCH "A"

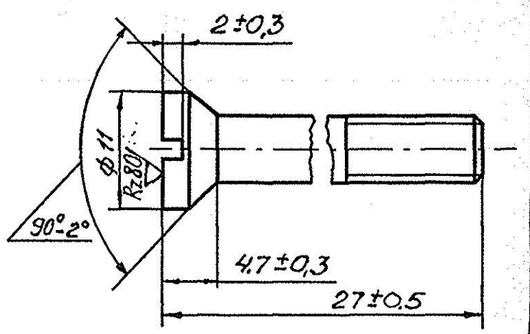

2. THE THREAD MAY BE MADE BY ROLLING WITH THE DIAMETER OF UNTHREADED PORTION WITHIN THE PITCH DIAMETER OF THREAD.
3. RADIUS FROM MILLING CUTTER R ≥ 30 mm IS ALLOWED TO BE LEFT AFTER CUTTING OF SLOT FOR SCREW - DRIVER.
4. DIMENSION 2 (DEPTH OF SLOT) MAY BE OBTAINED WITH TOLERANCE ± 0.4 mm.
5. IT IS ALLOWED TO MAKE THE SCREW HEAD AS PER SKETCH "A".
6. THE REST OF THE TECHNICAL REQUIREMENTS - AS PER STANDARD 82052 - 00.
9. DIMENSIONS SHOULD BE CHECKED BEFORE COATING.
10. COATING :- Cd 9, CHROMATIZING, AS PER ИЦЛ - 104 WITH ELIMINATION OF HYDROGEN EMBRITTLEMENT.
11. ALTERNATE MATERIAL : STEEL, GRADES 40 AND 50, GOST 1050 - 74.

DRG. RE-INDIANIZED BASED ON RUSSIAN ORIGINAL ISSUE - 9.
COMMON TO V46-6 & V92S2 ENGINES.

N. S. (N SARAVANAN) SSO-I Dt. 28 Aug 2019

PILOT SAMPLE SHOULD BE APPROVED BEFORE BULK PRODUCTION.

EST. WT. 0.006 Kg

TO BE STAMPED OR MARKED WHERE INDICATED THUS # (LETTERS)

ALL SHARP EDGES AND CORNERS TO BE REMOVED UNLESS OTHERWISE STATED MACHINED CORNERS TO HAVE R OUT-SIDE R INSIDE EQUIVALENT CHAMFERS ARE PERMISSIBLE.

ISSUE	DATE	NATURE OF AMENDMENTS
9A	06.08.19	USED ON NUMBER ADDED.

DRN	Sd/=
CHD	Sd/=
APPD	Sd/=
DATE	07.05.86
SCALE:-	2 : 1
DIMENSIONS IN mm	
TOLERANCE ON DIMNS UNLESS OTHERWISE STATED IS : 2102 - 69	
ALL THREADS TO CONFORM TO	

MATERIAL :- GOST 7417-75 ROUND BAR 45 GOST 1051-73

USED ON :- ~~Cb 327-00-45~~ Cb 327-00-47-01 Cb 327-00-73 (9A)

CONTROLLERATE OF QUALITY ASSURANCE (HEAVY VEHICLES) AVADI

TITLE :- SCREW M6 x 25

D S CAT NUMBER

DRAWING NUMBER 356-64

A11

SIZE A3

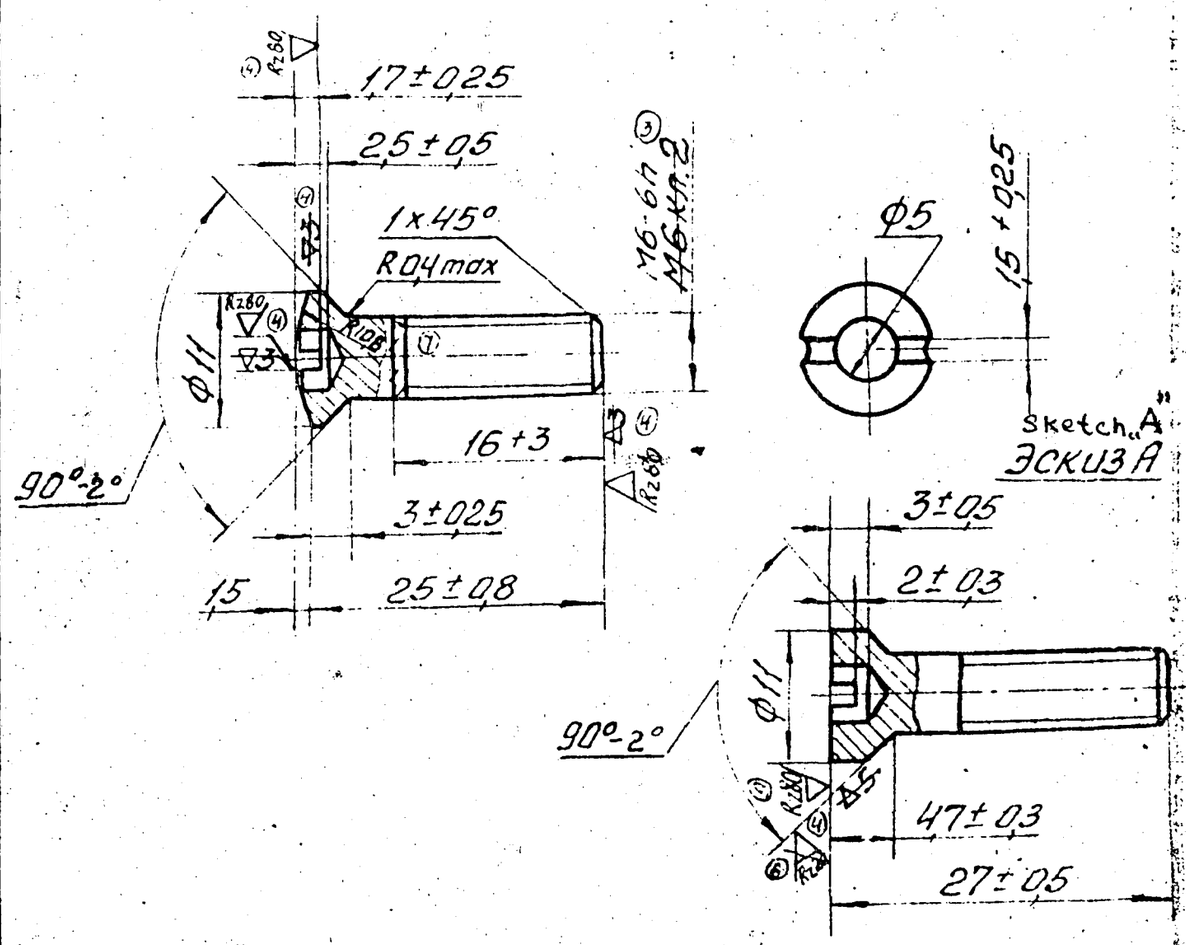

2. The thread may be made by rolling with the diameter of unthreaded portion within the pitch diameter of thread.
3. Radius from milling cutter R ≥ 30 mm is allowed to be left after cutting of slot for screw-driver.
4. It is allowed to make the screw head as per sketch „A"
5. Diameter 2 (depth of slot) may be obtained with tolerance ±0.4 mm.
6. The rest of the technical requirements - as per Standard 82052-00.
8. Coating :- Cd 9, chromatizing as per ГОСТ 9.104 with elimination of Hydrogen embrittlement.
10. Dimensions should be checked before coating.
11. Alternate material :- Steel, grades 40 and 50 GOST 1050-74.

ISSUE	DATE	NATURE OF AMENDMENTS	EST. MASS 0.006 Kg.	TO BE STAMPED OR MARKED WHERE INDICATED THUS # (LETTERS)
			ALL SHARP EDGES AND CORNERS TO BE REMOVED UNLESS OTHERWISE STATED MACHINED CORNERS TO HAVE R OUTSIDE R INSIDE EQUIVALENT CHAMFERS ARE PERMISSIBLE.	
DRN		SCALE - 2 : 1	MATERIAL :- ROUND BAR GOST 7417-75 45 GOST 1051-73	USED ON :- Cb 327-00-45
CHD		DIMENSIONS IN mm.	CONTROLLERATE OF INSPECTION (HEAVY VEHICLES) AVADI	
TCD		TOLERANCE ON DIMNS UNLESS OTHERWISE STATED.	TITLE :- SCREW M6 x 25	
APPD			D S CAT NUMBER	DRAWING NUMBER 356-64-1
DATE 04-5-84		ALL THREADS CONFORM TO		

A-11

Инв. № подл.	28736	Подп. и дата	01.2.74
Взам. инв. №			2190

EFA_15 Dec 2021

DRAWING NUMBER
356-84

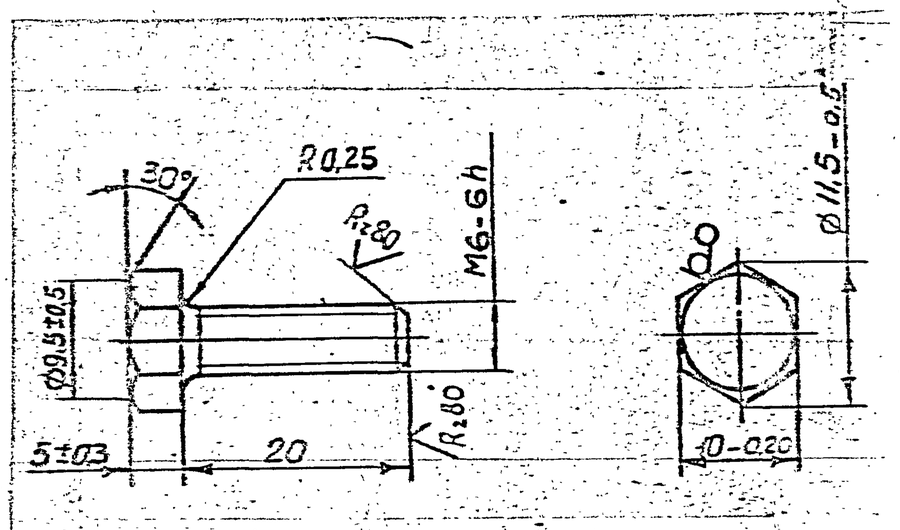

1. ALTERNATE MATERIAL IS STEEL 40, 30, GOST 1050-74.
2. COATING: ZINCPLATED, 3 MICRONS THICK, OILED.
3. OTHER TECHNICAL REQUIREMENTS ARE AS PER GOST 1759-70.
4. THEAD MAY BE MADE BY ROLLING WITH DIAMETER OF THE UNTHREADED PORTION BEING WITH IN THE LIMITS OF THE MEAN DIAMETER OF THE THREAD.
5. DIMENSION IS GIVEN FOR REFERENCE.

EXPLANATORY NOTE :-

6. MATERIAL QUOTED : 10-5 GOST 8560-78 / 45 GOST 1050-74

BRIGHT STEEL HEXAGONAL GRADE 45 STEEL, WITH WIDTH ACCROSS FLATS 10mm. OF ACCURACY CLASS 5.

ALTERNATE MATERIAL —— TO 40, 30 GOST 1050-74.
Reference No: 1)

a) CHEMICAL COMPOSITION :-

ELEMENT %	Gde 30	Gde 40	Gde 45
CARBON	0.27 - 0.35	0.37 - 0.45	0.42 - 0.50
SILICON	0.17 - 0.37	0.17 - 0.37	0.17 - 0.37
MANGANESE	0.50 - 0.80	0.50 - 0.80	0.50 - 0.80
CHROMIUM	0.25 - max	0.25 - max	0.25 - max
SULPHUR	0.04 - max	0.04 - max	0.04 - max
PHOSPHORUS	0.035 max	0.035 max	0.035 max

b) MECHANICAL PROPERTIES :-

STEEL GRADES	30	40	45
YIELD POINT Kgf/mm² (min)	30	34	36
ULTIMATE TENSILE STRENGTH Kgf/mm²(min)	50	58	61
% ELONGATION (min)	21	19	16
% REDUCTION OF AREA (min)	50	45	40
IMPACT STRENGTH Kgfm/cm² (min)	8	6	5

(A) EQUIVALENT MATERIAL STEEL 45C8 TO IS:1570

** Cb 411-00-56 (B)

			DRN	
			CHD	
			TCD	
			APPD	
			DATE	07-05-87
			SCALE:-	
			DIMENSIONS IN mm	
			TOLERANCE ON DIMNS UNLESS OTHERWISE STATED IS:2102-69	
			ALL THREADS TO CONFORM TO	
B	23.11.21	USED ON NUMBER ADDED.		
A	12-8-10	4th Alt.Comm.Meeting Minutes Point No.11 Dt: 26-10-09		
ISSUE	DATE	NATURE OF AMENDMENTS		

MATERIAL :- 10-5 GOST 8560-78 / 45 GOST 1050-74

USED ON CB 411-00-48 ** / CB 20-27-00-4 / CB 20-15-663-4

CONTROLLERATE OF QUALITY ASSURANCE(HEAVY VEHICLES) AVADI

PILOT SAMPLE SHOULD BE APPROVED BY A H S P BEFORE BULK PRODUCTION

EST. WT. 0.0066 Kg

TO BE STAMPED OR MARKED WHERE INDICATED THUS (LETTERS)

ALL SHARP EDGES AND CORNERS TO BE REMOVED UNLESS OTHERWISE STATED MACHINED CORNERS TO HAVE R OUT SIDE AND INSIDE EQUIVALENT CHAMFERS ARE PERMISSIBLE

TITLE: BOLT M6x20

D S CAT NUMBER

DRAWING NUMBER 356-84

COMMON TO V92S2 & UTD-20 ENGINE.

SIZE A3

356-84-1

Восстановленный подлинник №1.

Покрытие Ц3.хр по ЦЛ-483-82 с удалением водородной хрупкости.

1. В тропическом исполнении покрытие КД9.хр по ЦЛ-569-84 с удалением водородной хрупкости.
2. Заготовка должна соответствовать требованиям пункта 1.17 раздела 1 ГОСТ 1759-70 для нормальной степени точности.

356-84-1				
Болт М6×20	Лит	Масса	Масштаб	
	Б	0,007	1:1	
	Лист	Листов 1		
Заготовка Болт М6-6g×20.88.35 ГОСТ 7798-70				

356-84-1

Reduced original No: 1

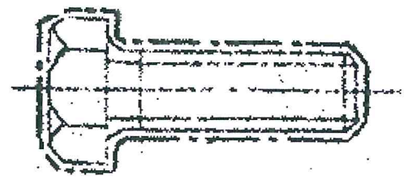

Coating Zn 3Cr as per instruction ЦЛ-483-82 by removevel of hydrogen embrittlement.

1. In tropicalized construction, coating kd gcr as per instruction ЦЛ-569-84 by removal of hydrogen embrittlement.
2. Blank should comply with requirement of point 1.17 of section 1 of gost 1759-70 for standard degree of accuracy.

Bolt M6 x 20	356-84-1
Blank Bolt M6-6g x 20.88.35 Gost 7798-70	

DRAWING NUMBER
358 - 48 - 205

SHEET No. 1 OF 1

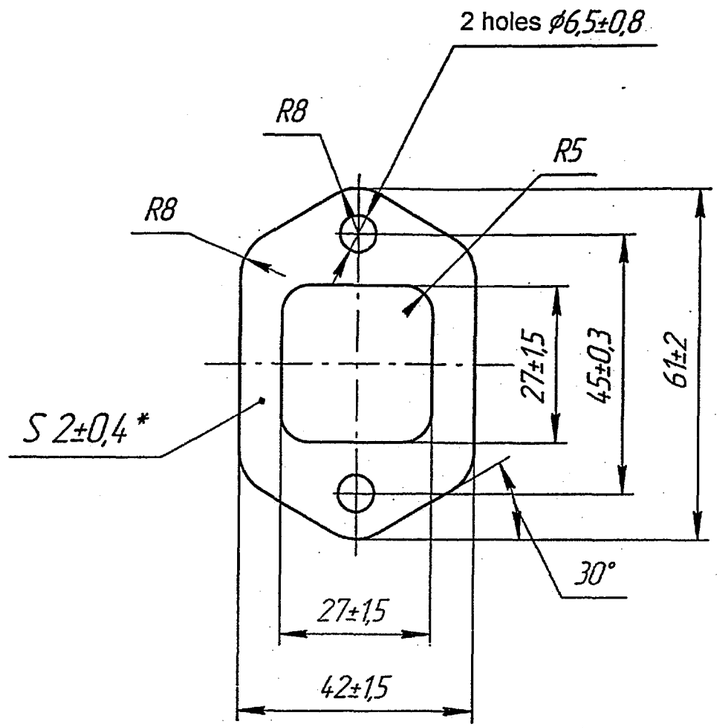

1. Dimensions are ensured with tool, except denoted by *.
2. It is permitted to supply with plate 250^{+50} x 250^{+50} x 2 mm.
3. Mark as per TY 005216 - 99 on tag.
4. Remaining technical requirements are as per TY 005216 - 99 for unit of code 25.3160, during supply with plates - unit of code 25.3410.

Guarantee as per guarantee specification CnC 481-88/4132, CnC 482-88/4132, CnC 189-81/4132.

DRAWING INDIANISED BASED ON RUSSIAN ORIGINAL ISSUE - NIL
NOTN. No. 2002-188.

PILOT SAMPLE SHOULD BE APPROVED BY A H S P BEFORE BULK PRODUCTION.

EST. WT. (Kg) 0.0092

TO BE STAMPED OR MARKED WHERE INDICATED THUS # (LETTERS)

ALL SHARP EDGES AND CORNERS TO BE REMOVED UNLESS OTHERWISE STATED MACHINED CORNERS TO HAVE R OUT-SIDE R INSIDE EQUIVALENT CHAMFERS ARE PERMISSIBLE.

ISSUE	DATE	NATURE OF AMENDMENTS

DRN
CHD
APPD
DATE
SCALE:- 1 : 1
DIMENSIONS IN mm
TOLERANCE ON DIMNS UNLESS OTHERWISE STATED IS : 2102 - 69
ALL THREADS TO CONFORM TO

MATERIAL :- RUBBER ИРП -1287 TY 005216-99

USED ON :- Cb.327-00-47-01

CONTROLLERATE OF QUALITY ASSURANCE (HEAVY VEHICLES) AVADI

TITLE :- GASKET

D S CAT NUMBER

DRAWING NUMBER 358 - 48 - 205

F -158

SIZE A3

DRAWING NUMBER
700-42-2237

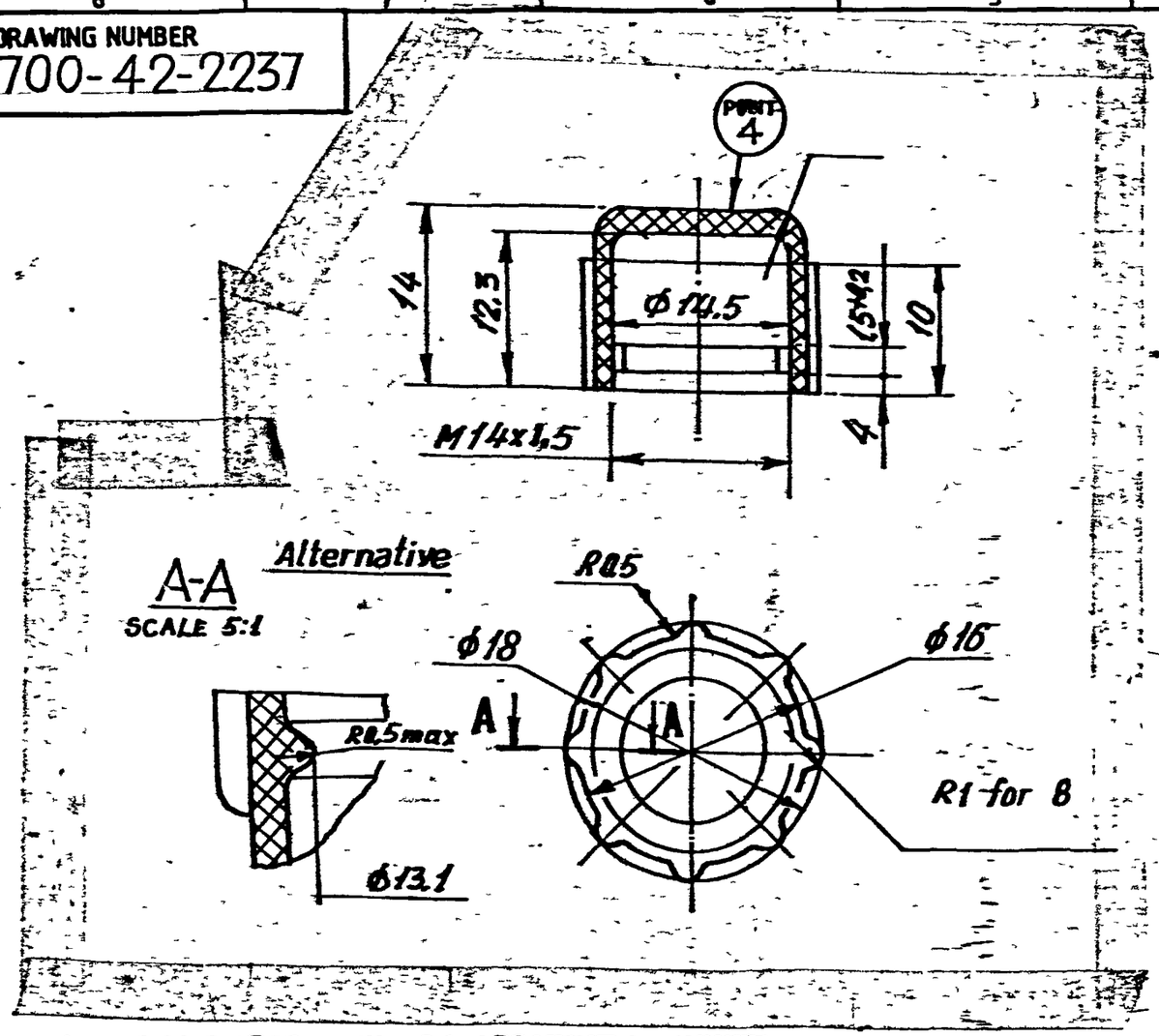

EXPLANATORY NOTE:-

MATERIAL QUOTED:- POLYETHYLENE - 15803 - 020 GRADE-I GOST 16337-77.

MATERIAL PRODUCED BY POLYMERISATION OF ETHYLENE IN TUBULAR REACTORS UNDER HIGH PRESSURE.

1 = METHOD OF MANUFACTURE
58 = BASIC GRADE
0 = WITHOUT HOMOGENISATION IN THE MOLTEN STATE.
3 = DENSITY OF POLYETHYLENE IN g/cm^3
020 = FLUIDITY INDEX.

TECHNICAL REQUIREMENTS:-

1. DENSITY g/cm^3 ..... 0·919 ± 0·002
2. BREAKING POINT UNDER TENSION - kgf/cm^2 ..... 115 (min)
3. PERCENTAGE ELONGATION AT RUPTURE % ..... 600 (min)
4. FLUIDITY INDEX IN MOLTEN STATE WITH PERCENTAGE TOLERANCE g/10 (min) ..... 2·0 ± 0·25
5. YIELD LIMIT UNDER TENSION.. kgf/cm^2 ..... 95 (min)
6. DISSIPATION FACTOR AT FREQUENCY 10^6 Hz ..... 3×10^{-4} to 6×10^{-4}
7. DIELECTRIC PERMEABILITY AT FREQUENCY 10^6 Hz .... 2·3 to 2·4
8. ELECTRIC STRENGTH (1mm THICK SPECIMAN AT ALTERNATING VOLTAGE WITH FREQUENCY 50 Hz kV/mm ..... 40 (min)

1. COLOUR OF THE COMPONENT IS WHITE.
2. THE SPECIFIED LIMIT DEVIATIONS OF DIMENSIONS ARE AS FOLLOWING.
   FOR HOLES H14, FOR SHAFTS h14, FOR OTHERS $\pm \frac{IT14}{2}$
3. THE SPECIFIED RADII ARE 0.8 mm MAX.
4. PLACE FOR MARKING THE MOULD NUMBER TYPE 1 TO 1.5 GOST 2930-62 PROJECTION SHOULD +0.5 mm MAX.
5. OTHER REQUIREMENTS ARE AS PER TY 6-05-1538-77.

EXPLANATORY NOTE ADDED ON 20-1-92

PILOT SAMPLE SHOULD BE APPROVED BY A H S P BEFORE BULK PRODUCTION

EST. WT. 0.001 kg.

TO BE STAMPED OR MARKED WHERE INDICATED THUS #(LETTERS)

ALL SHARP EDGES AND CORNERS TO BE REMOVED UNLESS OTHERWISE STATED MACHINED CORNERS TO HAVE R OUT SIDE R INSIDE EQUIVALENT CHAMFERS ARE PERMISSIBLE.

ISSUE	DATE	NATURE OF AMENDMENTS

DRN	[illegible]
CHD	[illegible]
TCD	G. Naraguy
APPD	[illegible]
DATE	9-1-87
SCALE:-	2:1
DIMENSIONS IN mm	
TOLERANCE ON DIMNS UNLESS OTHERWISE STATED IS : 2102-69.	
ALL THREADS TO CONFORM TO	

MATERIAL:- POLYETHYLENE 15803-020 GRADE 1 GOST 16337-77

USED ON CB 327-00-45

CONTROLLERATE OF QUALITY ASSURANCE (HEAVY VEHICLES) AVADI.

TITLE CAP

D S CAT NUMBER

DRAWING NUMBER 700-42-2237

DRAWING NUMBER
3327-61-3

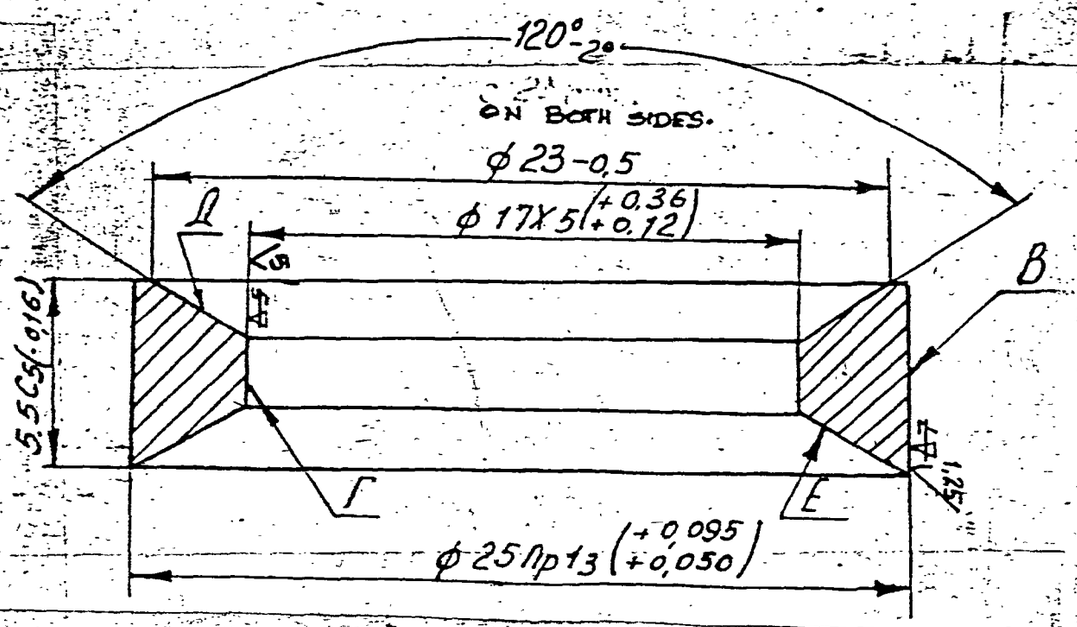

1. RUN-OUT OF SURFACE 'Г' RELATIVE TO SURFACE 'B' SHOULD NOT EXCEED 0.2mm.
2. RUN-OUT OF SURFACES 'A' AND 'E' RELATIVE TO SURFACE 'B' SHOULD NOT EXCEED 0.05mm.
3. BURRS ARE NOT ALLOWED.
4. DIMENSIONS, SURFACE FINISH AND TECHNICAL REQUIREMENTS SHOULD BE CHECKED NOT LATER THAN 4 HOURS AFTER MANUFACTURING OF COMPONENTS.
5. COMPONENTS ACCEPTED BY QID UNTIL BEING ASSEMBLED SHOULD BE PRESERVED IN DIESEL FUEL.

2.5 (√)

EXPLANATORY NOTE :

6. MATERIAL QUOTED : TUBE 14.3x28 GRADE 'A' TY 16-503-088-77.

14.3 X 28 = Int. Dia x Outer Dia.

PERTAINS TO CONSTRUCTIVE FABRIC LAMINATE TUBES PRODUCED OUT OF COTTON FABRIC " SHIFFON " AND PHENOL FORMALDEHYDE VARNISH ON ALCOHOL BASE GRADE CФФ.

GRADE 'A' FOR BEARING SEPARATOR'S MANUFACTURE.

DURATION OF LIMIT OPERATING TEMPERATURE FOR TUBES IS FROM -60 UPTO +105°C.

PHYSICAL AND MECHANICAL PARAMETERS :

DENSITY	= 1.25 - 1.40 g/cm³
WATER ABSORPTION	= 0.9 % (max)
TENSION BREAKING STRESS ALONG THE TUBE (IN AXIS DIRECTION)	= 1000 Kgf/cm² (min) 1A
COMPRESSION BREAKING STRESS ALONG THE TUBE (IN AXIS DIRECTION)	= 1600 Kgf/cm² (min) 1A
OIL RESISTANCE IN TRANSFORMER OIL AT A TEMPERATURE OF 105°C.	= 4 Hrs. (min)
RESISTANCE TO SHORT TIME HEATING FOR 24 Hrs.	= 120° C.

PILOT SAMPLE SHOULD BE APPROVED BY A H S P BEFORE BULK PRODUCTION

EST. WT. 0.0005 Kg

TO BE STAMPED OR MARKED WHERE INDICATED THUS # (LETTERS)

ALL SHARP EDGES AND CORNERS TO BE REMOVED UNLESS OTHERWISE STATED MACHINED CORNERS TO HAVE R OUT SIDE R INSIDE EQUIVALENT CHAMFERS ARE PERMISSIBLE.

ISSUE	DATE	NATURE OF AMENDMENTS
1A	20.11.89	D. O. CORRECTION.

DRN	
CHD	
TCD	
APPD	
DATE	08-05-86
SCALE:-	5 : 1
DIMENSIONS IN mm. TOLERANCE ON DIMNS UNLESS OTHERWISE STATED IS:2102-69	
ALL THREADS TO CONFORM TO	

MATERIAL:- TUBE 14.3x28 GRADE A, TY 16-503-088-77

USED ON СБ 327-00-45

CONTROLLERATE OF QUALITY ASSURANCE(HEAVY VEHICLES) AVADI

TITLE **GASKET**

D S CAT NUMBER

DRAWING NUMBER 3327-61-3

3327-79-1A

NO. OF WORKING COILS	4.5
TOTAL NO. OF COILS	7-95
LENGTH OF DEVELOPED COMPONENT	605
DIRECTION OF COILING . R.H.	RIGHT

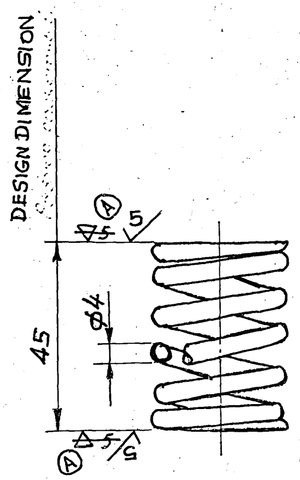

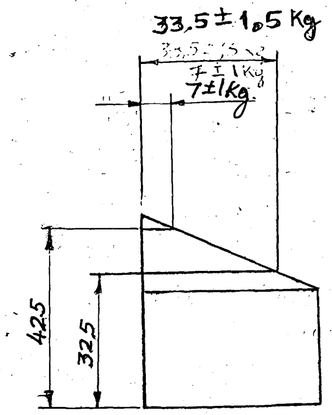

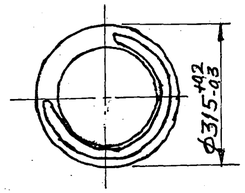

16. COATING: CD15, CHROMATIZING IN ACCORDANCE WITH UU,A-104 WITH ELIMINATION OF HYDROGEN EMBRITTLEMENT, BAKELIZING ЛБС-1 (2) III Б IN ACCORDANCE WITH UЛ-10-73 (CADMIUM COATING SHOULD BE ENSURED ON THE SURFACE BETWEEN END AND FIRST WORKING COIL)
17. LOAD TESTS SHOULD BE CARRIED OUT BEFORE BAI LIZING.

1. INSPECTION GROUP IV AS PER TECHNICAL REQUIREMENTS 11.
2. HARDNESS SHOULD BE CHECKED ON WORKING COILS OF COMPONENT ON TEST PIECES TAKEN FROM A BATCH OF COMPONENT, HRC 40---47
3. VARIATION IN PITCH OF WORKING COILS SHOULD NOT EXCEED 0·2 MM.
4. NON-SQUARENESS OF GROUND FACES WITH THE AXIS SHOULD NOT EXCEED 0·5 MM ON SPRING LENGTH.
5. INCREASE OF OUTER DIAMETER OF END COILS UP TO 31·9 MM IS ALLOWED.
6. GAP BETWEEN COMPRESSED COILS SHOULD NOT EXCEED 0·2 MM.
7. BASE SURFACE OF EXTREME COILS SHOULD NOT BE LESS THAN 0·65 THE LENGTH OF CIRCUMFERENCE. THICKNESS OF ENDS OF EXTREAM COILS SHOULD NOT BE LESS THAN 0·5 MM.
8. AFTER COIL TO COIL COMPRESSION THE SPRING SHOULD HAVE NO RESIDUAL DEFORMATION.
9. THE COMPONENT SHOULD BE CHECKED ON FIELD FLAW DETECTOR.
10. TO BE ACCEPTED IN ACCORDANCE WITH TECHNICAL REQUIREMENTS ИБ-17.
11. SHARP EDGES SHOULD BE BLUNTED.
12. TO BE SHOT BLASTED IN ACCORDANCE WITH INSTRUCTION ~~UU,A 1067~~. UM 508-83 (B)
13. LOCAL ABSENCE OF CADMIUM IS ALLOWED ON END COILS (ON HALF THE LENGTH OF GROUND SURFACE OF END COILS MEASURING FROM THE BEGINNING OF THE COIL.
14. GRINDING OF SPRING FACES AFTER SHOT BLASTING IS ALLOWED.
15. THERE MAY BE NO BAKELITE ON SPRING FACE BETWEEN COMPRESSED COILS.

A-8

			EST. MASS 0.053 Kg.
B	15.2.88	AUTHY. NOTN. NO. BK 84-704	
A	24.9.87	AUTHY. NOTN. NO. BK83-11	
ISSUE	DATE	NATURE OF AMENDMENTS	
DRN		SCALE -	
CHD		DIMENSIONS IN mm.	
TCD		TOLERANCE ON DIMNS UNLESS OTHERWISE STATED.	
APPD			
DATE	11-5-88	ALL THREADS CONFORM TO	

TO BE STAMPED OR MARKED WHERE INDICATED THUS # (LETTERS)

ALL SHARP EDGES AND CORNERS TO BE REMOVED UNLESS OTHERWISE STATED MACHINED CORNERS TO HAVE R OUTSIDE R INSIDE EQUIVALENT CHAMFERS ARE PERMISSIBLE.

MATERIAL:- WIRE 51X ФА-А-II-XH-4 GOST 14963-78

USED ON:- CB 327-00-45

CONTROLLERATE OF INSPECTION (HEAVY VEHICLES) AVADI

TITLE:- PLUNGER SPRING

D S CAT NUMBER

DRAWING NUMBER 3327-79-1A

DRAWING NUMBER
3327-80-1

SHEET No. 1 OF 1

(P. JANARDHANAN)
Dt. 15 Nov'10 JTO (D)

DRG. REINDIANISED BASED ON RUSSIAN ORIGINAL ISSUE - NIL

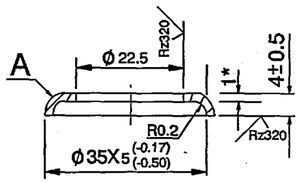

1. REQUIREMENTS FOR STAMPING AS PER STANDARD 82050-16.
2. NON-FLATNESS OF SURFACE 'A' SHOULD NOT EXCEED 0.1mm.
3. COATING : Zn 9, CHROMATIZING IN ACCORDANCE WITH ЦЛ-483-82 WITH ELIMINATION OF HYDROGEN EMBRITTLEMENT.
4. ALTERNATE MATERIAL : STEEL GRADES 08 КП, 10 КП, 15 КП TO GOST 1050-74.
5. * DIMENSIONS FOR REFERENCE.

(A) EQUIVALENT MATERIAL Gr.D
IS:1994

PILOT SAMPLE SHOULD BE APPROVED BY A H S P BEFORE BULK PRODUCTION.

EST. WT. (Kg) 0.005

TO BE STAMPED OR MARKED WHERE INDICATED THUS # (LETTERS)

ALL SHARP EDGES AND CORNERS TO BE REMOVED UNLESS OTHERWISE STATED MACHINED CORNERS TO HAVE R OUT-SIDE R INSIDE EQUIVALENT CHAMFERS ARE PERMISSIBLE.

ISSUE	DATE	NATURE OF AMENDMENTS
A	13.11.10	4th Alt. Comm. Mtg. Minutes Point No.1 Dated 26.10.09

DRN	Sd/=
CHD	Sd/=
APPD	Sd/=
DATE	Nov 2010
SCALE:- 1 : 1	
DIMENSIONS IN mm	
TOLERANCE ON DIMNS UNLESS OTHERWISE STATED IS : 2102 - 69	
ALL THREADS TO CONFORM TO IS : 4218,PART-4.	

MATERIAL :- STRIP 08пс-M-2-1 GOST 503-81

USED ON :- Cb 327-00-45

CONTROLLERATE OF QUALITY ASSURANCE (HEAVY VEHICLES) AVADI

TITLE :-
SPRING DISC UPPER

D S CAT NUMBER

DRAWING NUMBER
3327-80-1

F-

SIZE A3

DRAWING NUMBER
3327-81-1

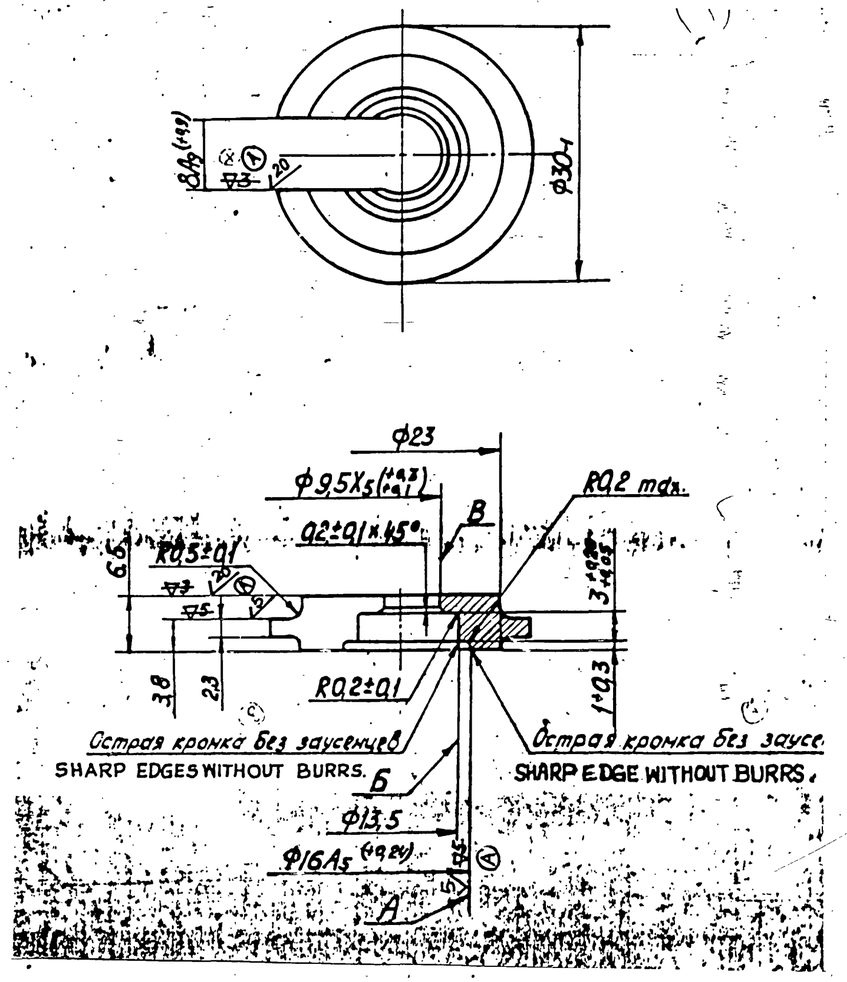

1. INSPECTION GROUP IV AS PER TECHNICAL REQUIREMENTS 11.
2. (B) TO BE CYANIDED TO A DEPTH OF 0.10 - - 0.25mm. ~~HRC≥48.~~ HRC3≥49
3. DIMENSIONS WITH UNSPECIFIED TOLERANCES SHOULD BE MAINTAINED AS PER ACCURACY CLASS 7 OST 1010.
4. SHARP EDGES SHOULD BE BLUNTED.
5. RUN-OUT OF SURFACES 'Б' AND 'B' RELATIVE TO THE AXIS OF SURFACE 'A' SHOULD NOT EXCEED 0.25mm.
6. COATING : Zn 3, CHROMATIZING IN ACCORDANCE WITH ОСТ-154 WITH ELIMINATION OF HYDROGEN EMBRITTLEMENT.
7. AFTER HEAT TREATMENT HOLE B MAY HAVE DIMENSION Ф 9.5 A_5 (+ 0.2)

EXPLANATORY NOTE :

MATERIAL QUOTED : STEEL 20 / GOST 1050-74

a) CHEMICAL COMPOSITION :

CONTENT OF ELEMENTS %							
C	Si	Mn	Cr	P	S	Cu	Ni
			MAXIMUM				
0.17-0.24	0.17-0.37	0.35-0.65	0.25	0.035	0.040	0.25	0.25

b) MECHANICAL PROPERTIES :

TENSILE STRENGTH Kgf/mm² (min)	YIELD POINT Kgf/mm² (min)	ELONGATION % (min)	REDUCTION IN AREA (min)
42	25	25	55

(A) EQUIVALENT MATERIAL STEEL 070M20 (EN3A) TO BS: 970

PILOT SAMPLE SHOULD BE APPROVED BY A H S P BEFORE BULK PRODUCTION.

EST. WT.	TO BE STAMPED OR MARKED WHERE INDICATED THUS # (LETTERS)
0.015 kg.	

ALL SHARP EDGES AND CORNERS TO BE REMOVED UNLESS OTHERWISE STATED MACHINED CORNERS TO HAVE R OUTSIDE R INSIDE EQUIVALENT CHAMFERS ARE PERMISSIBLE.

ISSUE	DATE	NATURE OF AMENDMENTS
A	10-7-10	4th ALT.COMM.Mtg. MINUTES POINT No. 5 DT. 26-10-09

DRN
CHD
TCD
APPD
DATE 4-5-89
SCALE :- 2:1
DIMENSIONS IN mm.
TOLERANCE ON DIMNS UNLESS OTHERWISE STATED IS 2102-69
ALL THREADS TO CONFORM TO

MATERIAL :- Steel 20 GOST 1050-74
USED ON :- C6 327-00-45
CONTROLLERATE OF QUALITY ASSURANCE (HEAVY VEHICLES) AVADI
TITLE SPRING DISC LOWER
D S CAT NUMBER
DRAWING NUMBER 3327-81-1

KVD No: 78274

SIZE A2

DRAWING INDIANISED BASED ON ISSUE 7

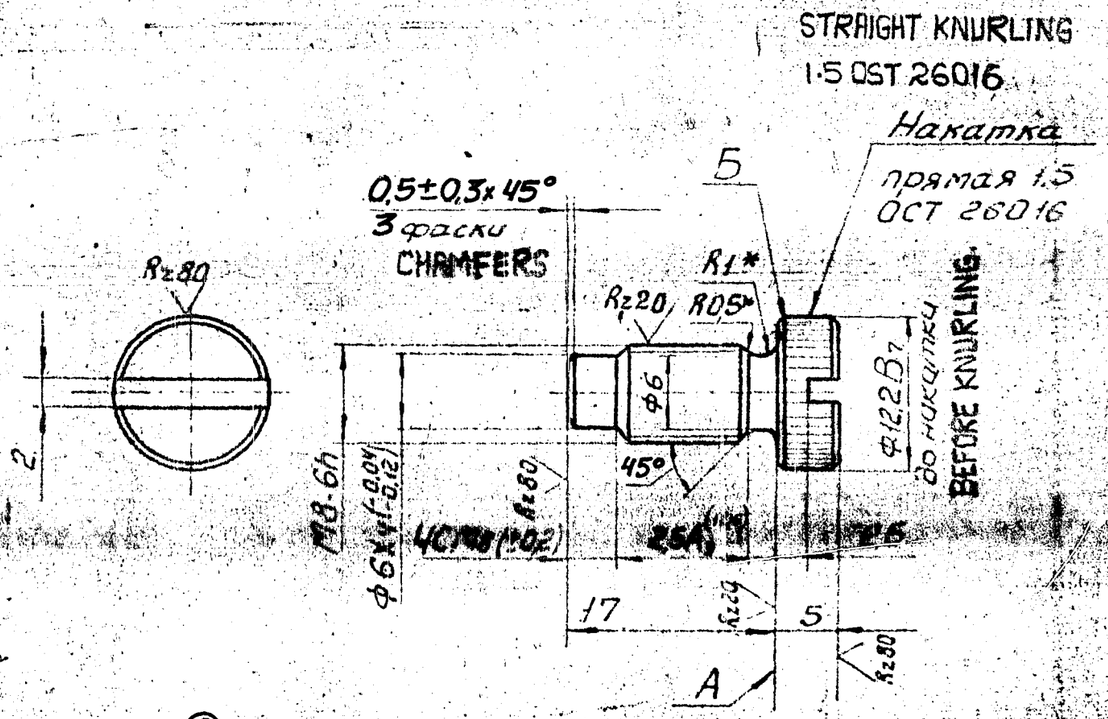

© ALTERNATE MATERIAL: STEEL 080 M40 (EN 8) TO BS:970 Pt-I-1983 OR 45 C8 TO IS: 1570

~~(B) 1. INSPECTION GROUP III AS PER TECHNICAL REQUIREMENTS. II~~

~~(B) (A) 2. TO BE CYANIDED, 0.10 ... 0.25 HRC ≥ 49~~

~~(B) 3. MAY BE CARBONITRIDED IN GAS ATMOSPHERE TO A DEPTH OF 0.1 ... 0.2 mm, HRC ≥ 48~~

4. UNSPECIFIED TOLERANCES OF DIMENSIONS: FOR HOLES: AS PER A7, FOR SHAFTS AS PER B7 FOR THE REST OF THE DIMENSIONS AS PER Cm7

5. END PLAY OUT OF SURFACE A RELATIVE TO THE AXIS OF THREAD SHOULD NOT EXCEED 0.08 mm AT Ø 11 mm (MMC)

6. RADIUS FROM CUTTER R ≥ 25 mm MAY BE LEFT AFTER CUTTING OF SLOT FOR SCREW DRIVER.

7. CHAMFER 5 MAY NOT BE DONE.

11). *DIMENSIONS SHOULD BE ENSURED WITH TOOL.

12. IT IS ALLOWED TO MAKE CLEARENCE GROVE UP TO 3.2 mm WIDE.

13. COATING:- Cd 9 CHROMATIZING IN ACCORDANCE WITH 44JT-104 WITH ELIMINATION OF HYDROGEN EMBRITTLEMENT THERE MAY BE NO COATING ON THREAD AND INTERNAL SURFACES.

A-8

C	13.7.84	3rd ALTN. COMM. MINUTES POINT 8 DT 27-2-09	EST. MASS 0.0077 Kg
B	15.2.88	ALTN. BK 86-636	TO BE STAMPED OR MARKED WHERE INDICATED THUS # LETTERS)
A	7.2.67	ALTN. BK 62-394	ALL SHARP EDGES AND CORNERS TO BE REMOVED UNLESS OTHERWISE STATED MACHINED CORNERS TO HAVE R OUTSIDE R INSIDE EQUIVALENT CHAMFERS ARE PERMISSIBLE.
ISSUE	DATE	NATURE OF AMENDMENTS	
DRN		SCALE - 2:1	MATERIAL:- STEEL, GOST 1050-74 (B) 15 / USED ON:- CB 327 00 45
CHD		DIMENSIONS IN mm.	CONTROLLERATE OF INSPECTION (HEAVY VEHICLES) AVADI
TCD		TOLERANCE ON DIMNS UNLESS OTHERWISE STATED.	TITLE:- LOCKING SCREW
APPD			
DATE	26-5-84	ALL THREADS CONFORM TO	D S CAT NUMBER / DRAWING NUMBER 3327 84A

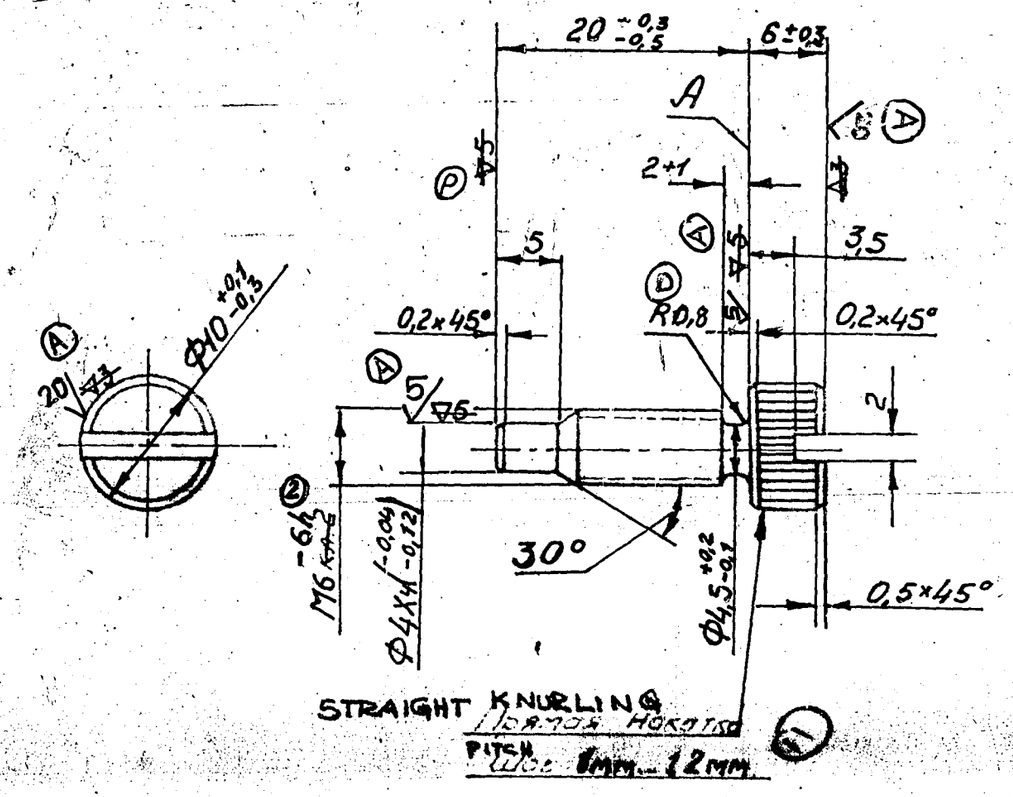

1. Inspection group IV as per technical requirements 11.
2. To be cyanided to a depth of 0.1 .... 0.25 mm. ~~HRC > 48.~~ HRC$_3$≥49.
3. Dimensions with unspecified tolerances may be maintained as per accuracy class 7 OST 1010.
4. Technical requirements for thread as per standard 82021-00
5. Non-squareness of face A with the axis of thread should not exceed 0.05 mm at Ø 9 mm (MMC)
6. Thread and screw head should be concentric within 0.1mm.
7. Radius from cutter R≥25 mm may be left after cutting of slot for screwdriver.
8. Chamfer 0.2 X 45° at Ø 10 mm on side of thread may not be done.
9. Coating: Cd 9, chromatizing in accordance with ~~ШЛ-4-101~~ ШЛ-569-84 with elimination of hydrogen embrittlement. Dimensions should be checked before coating. Coating may not be done on thread and internal surfaces.
10. May be carbonitrided in gas atmosphere to a depth of 0.1 ....0.2 mm ~~HRC > 48.~~ HRC$_3$≥49.

EQUIVALENT MATERIAL
EN 36B TO BS:970 /
13 Ni 13 Cr 3 TO IS:4432-1988

* СБ 20-27-00-4

A8

5	1	BK82-207
E	15.7.10	4th ALT. COMM. Mtg. MINUTE POINT No. 9 DT. 26-10-09
D	10-2-95	AUTHY. NOTN. NO. BK-85-844
C	15.2.88	AUTHY. NOTN. NO. BK 85-141
B	9.12.87	AUTHY BK 82-394
A	24.9.87	AUTHY. NOTN. NO. BK83-11
ISSUE	DATE	NATURE OF AMENDMENTS

DRN
CHD
TCD
APPD
DATE 09-5-86

SCALE - 2:1

DIMENSIONS IN mm.

TOLERANCE ON DIMNS UNLESS OTHERWISE STATED.

ALL THREADS CONFORM TO

EST. MASS 0.0069 Kg

TO BE STAMPED OR MARKED WHERE INDICATED THUS # (LETTERS)

ALL SHARP EDGES AND CORNERS TO BE REMOVED UNLESS OTHERWISE STATED MACHINED CORNERS TO HAVE R OUTSIDE R INSIDE EQUIVALENT CHAMFERS ARE PERMISSIBLE.

MATERIAL:- STEEL 12 XH3A TY 14-1-381-72

USED ON:- * СБ-327-00-45

CONTROLLERATE OF INSPECTION (HEAVY VEHICLES) AVADI

TITLE:- SETTING SCREW

D S CAT NUMBER

DRAWING NUMBER 3327-85A

KVD No. 63476

Подп. и дата | Инв. № дубл. | Взам. инв. № | Подп. и дата | Инв. № подл.

DRAWING NUMBER
3327 112

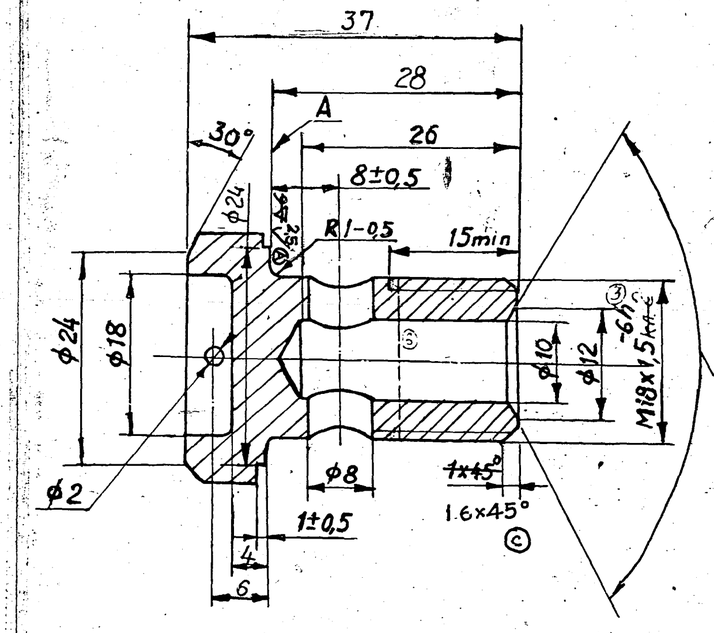

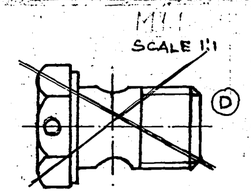

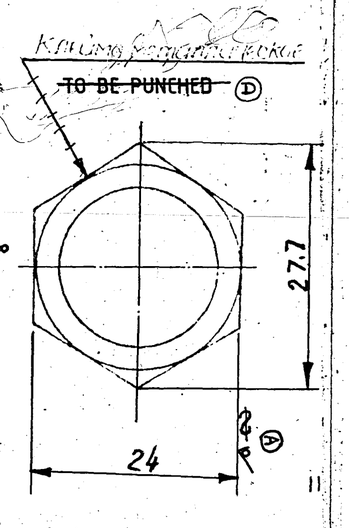

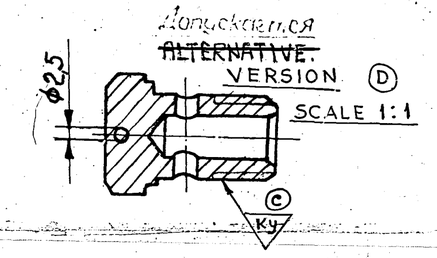

EXPLANATORY NOTE :

16. REFERENCE MATERIAL QUOTED:
BRIGHT STEEL HEXAGON BAR 24mm A/F CLASS OF ACCURACY 4 (-0,100) TO GOST 8560-78, FROM HIGH GRADE SIZED STEEL 45, SURFACE QUALITY "B" TO GOST 1051-73 AND MANUFACTURED IN ACCORDANCE WITH QUALITY CARBON STRUCTURAL STEEL GRADE 45 AND REFERENCE NOTE 15 ON ALTERNATE MATERIALS STEEL GRADES 40 AND 50 TO GOST 1050-74.

a) CHEMICAL COMPOSITION AS PER GRADES 45,40 & 50 TO GOST 1050-74.

GRADE OF STEEL	CONTENT OF ELEMENTS %						REMARKS
	C	Si	Mn	Cr	S	P	
				MAXIMUM			
45	0.42-0.50	0.17-0.37	0.50-0.80	0.25	0.040	0.035	Ref,Matl
40	0.37-0.45	0.17-0.37	0.50-0.80	0.25	0.040	0.035	Alt,Matl
50	0.47-0.55	0.17-0.37	0.50-0.80	0.25	0.040	0.035	Alt,Matl

RESIDUAL CONTENT OF COPPER AND NICKEL SHOULD NOT EXCEED 0.25% EACH

b) MECHANICAL PROPERTIES UNDER NORMALISED CONDITION:

GRADE OF STEEL	ULTIMATE TENSILE STRENGTH Kgf/mm²	YIELD POINT Kgf/mm²	ELONGATION %	REDUCTION IN AREA %	IMPACT STRENGTH Kgm/cm²	HARD NESS BHN MAX	RE-MARKS
45	61	36	16	40	5	229	Ref Matl
40	58	34	19	45	6	217	Alt Matl
50	64	38	14	40	4	241	Alt Matl

1. DELETED.
2. DIMENSIONS WITH UNSPECIFIED TOLERANCES SHOULD BE MAINTAINED AS PER ACCURACY CLASS 7 OST 1010.
3. TECHNICAL REQUIREMENTS FOR THREAD AS PER STANDARD 82021-00.
4. NON-SQUARENESS OF FACE 'A' WITH AXIS OF THREAD SHOULD NOT EXCEED 0.1mm AT ϕ24.
5. TOOL CUTTING INTO A DEPTH NOT EXCEEDING 0.3mm ON CYLINDRICAL SURFACE IS ALLOWED DURING FACING END FACE 'A'.
6. RECESS WITH DIMENSIONS ϕ18 AND 4 IS NOT OBLIGATORY.
7. SHARP EDGES SHOULD BE BLUNTED.
8. DELETED.
9. DIMENSIONS SHOULD BE CHECKED BEFORE COATING.
10. THE THREAD SHOULD BE CHECKED FOR SCREWING TOGETHER WITH MATING COMPONENT BY HAND.
11. AFTER COATING HEXAGON BAR SIDES MAY BE TURNED TO ϕ27B7.
12. COATING: Cd 9, CHROMATIZING IN ACCORDANCE WITH ~~ШЛ-194~~ ШЛ 569-84 (B) WITH ELIMINATION OF HYDROGEN EMBRITTLEMENT. THERE MAY BE NO COATING ON INTERNAL SURFACES AND THREAD.
13. THREAD SHOULD BE TAPPED.
14. ROLLED STOCK OF CLASS 4 GROUP 'B' GOST 1051-73 MAY BE USED. TO ENSURE HIGH QUALITY OF COATING, IT IS ALLOWED, TO ELIMINATE SURFACE DEFECTS OF ROLLED STOCK WITH DECREASE OF ITS DIMENSION AS PER ACCURACY CLASS 5.
15. ALTERNATE MATERIAL: STEEL GRADES 40 AND 50 GOST 1050-74.

(E) EQUIVALENT MATERIAL
STEEL 080 M40 (EN 8) TO BS:970 OR
45 CB TO IS 1570

PILOT SAMPLE SHOULD BE APROVED BY A H S P. BEFORE BULK PRODUCTION

EST. WT.	TO BE STAMPED OR MARKD WHERE INDICATED THUS # (LETTERS)
0.05 Kg	

ALL SHARP EDGS AND CORNERS TO BE REMOVDD UNLESS OTHERWISE STATED MACHINED CORNERS TO HAVE R OUT-SIDE R INSIDE EQUIVALENT CHAMFERS ARE PERMISSIBLE

ISSUE	DATE	NATURE OF AMENDMENTS
E	10-7-10	A/B ALT. COMM. Mtg. MINUTES POINT No. 7 DT. 26-10-09
D	11-8-98	AUTHY NOTN No. BK 87-144
C	29.9.93	AUTHY NOTN No: BK 89-367
B	15-2-88	AUTHY. NOTN. NO. BK 85-141
A	24 9 87	AUTHY. NOTN. NO. BK 83-11

DRN
CHD
TCD
APPD
DATE 2-4-4-86
SCALE: 1 : 1
DIMENSIONS IN mm
TOLERANCE ON DIMNS UNLESS OTHERWISE STATED'
ALL THREADS TO CONFORM TO

MATERIAL: HEXAGON BAR 24-4 GOST 8560-78
45-B GOST 1051-73

USED ON: ~~СБ 3535-0024~~ 30
СБ 447 00 1-176 32 СБ
СБ 327 00 45

CONTROLLERATE OF INSPECTION (HEAVY VEHICLES) AVADI

TITLE: CONNECTOR

D S CAT NUMBER

DRAWING NUMBER 3327 112

3327-112-2

ЕСКД

Rz 40

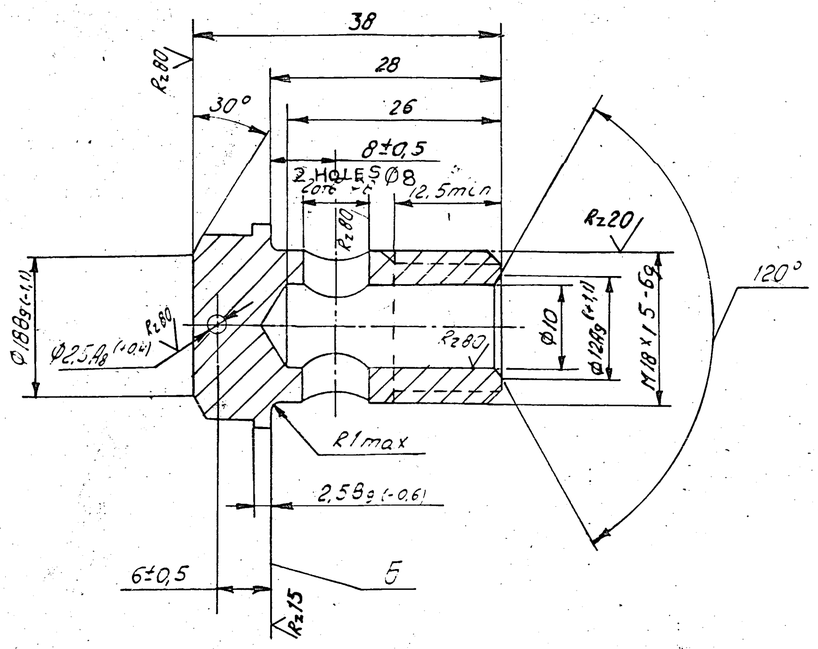

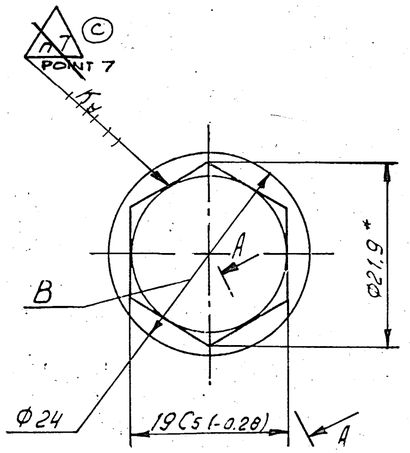

A-A

Радиус или фаска 1max

RADIUS OR CHAMFER 1 MAX.

1. ALTERNATE MATERIAL STEEL, GRADES 40 AND 50, GOST 1050-74.

2. UNSPECIFIED TOLERANCES OF DIMENSIONS AS PER ACCURACY CLASS 7 OST 1010.

3. NON SQUARENESS OF FACE Б WITH THE AXIS OF THREAD SHOULD NOT EXCEED 0.1 MM AT Ø 24 MM (MMC).

4. TOOL CUTTING IN TO A DEPTH OF 0.8 MM, MAX, IS ALLOWED ON CYLINDRICAL SURFACE DURING FACING OF END FACE Б.

5. ----

6. ----

© ~~7. TO BE PUNCHED.~~

© 7. ~~8.~~ ON SURFACE B ROUGHNESS IS ALLOWED

© *8. ~~9.~~ DIMENSION FOR REFERENCE.

Ⓐ 6. COATING: CD 9, CHROMATIZING IN ACCORDANCE WITH ~~UU-A-104~~ UU-I-569-86 WITH ELIMINATION OF HYDROGEN EMBRITTLEMENT. THERE MAY BE NO COATING ON INNER SURFACES AND THREAD.

A-8

			EST. MASS Ⓑ 0.06	TO BE STAMPED OR MARKED WHERE INDICATED THUS # (LETTERS)
C		AUTHY.NOTN.No.BK 87-144		
B	29.9.93	AUTHY.NOTN.No. BK 86-441	ALL SHARP EDGES AND CORNERS TO BE REMOVED UNLESS OTHERWISE STATED MACHINED CORNERS TO HAVE R OUTSIDE R INSIDE EQUIVALENT CHAMFERS ARE PERMISSIBLE.	
A	15.2.88	AUTHY.NOTN.NO. BK 85-141		
ISSUE	DATE	NATURE OF AMENDMENTS		
DRN		SCALE - 2 : 1	MATERIAL:- STEEL 45 GOST 1050-74	USED ON:- СБ 327 00 45
CHD		DIMENSIONS IN mm.	CONTROLLERATE OF INSPECTION (HEAVY VEHICLES) AVADI	
TCD		TOLERANCE ON DIMNS UNLESS OTHERWISE STATED.	TITLE:- CONNECTOR	
APPD			D S CAT NUMBER	DRAWING NUMBER 3327 112 2
DATE	11-5-86	ALL THREADS CONFORM TO		

DRAWING NUMBER
3327-121-1

Ⓐ 5/(√) ~~∇5 (∇)~~

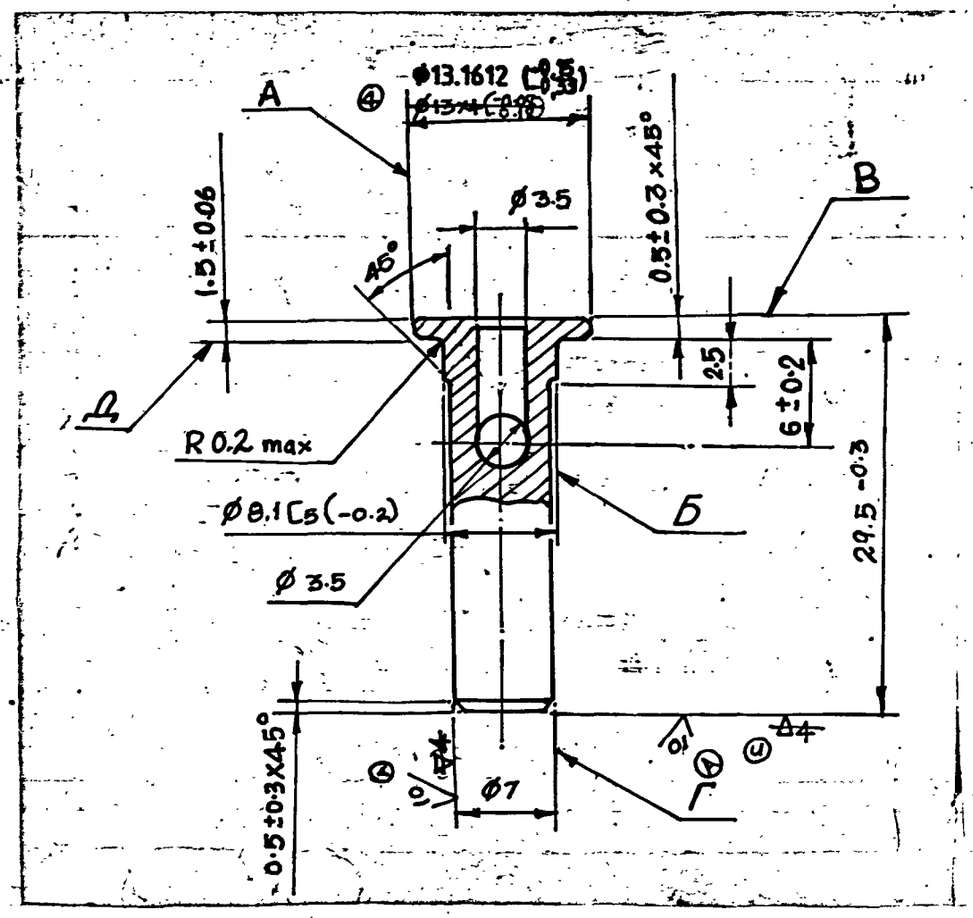

1. INSPECTION GROUP III AS PER TECHNICAL REQUIREMENTS 11.
2. (B) TO BE CYANIDED TO DEPTH OF 0.10 L -- 0.25 HRC, ≥ 49. ~~HRC ≥ 48~~
3. DIMENSIONS WITH UNSPECIFIED TOLERANCES SHOULD BE MAINTAINED AS PER ACCURACY CLASS 7 OST 1010.
4. RUN-OUT OF SURFACE A & Б RELATIVE TO SURFACE 'Г' SHOULD NOT EXCEED 0.1mm.
5. RUN-OUT OF FACE 'Д' AT Ø11mm RELATIVE TO SURFACE 'Г' S. SHOULD NOT EXCEED 0.1mm.
6. NON-PARALLELISM OF SURFACE B & Д SHOULD NOT EXCEED 0.1mm AT Ø11mm.
7. SHARP EDGES ARE ALLOWED.
8. COATING : CHEMICAL OXIDIZING, OIL FINISHING.
9. MAY BE CARBONITRIDED IN GAS ATMOSPHERE TO A DEPTH OF 0.1 TO 0.2 mm. HRC ≥ 49. ~~HRC ≥ 48~~ (B)

PILOT SAMPLE SHOULD BE APPROVED BY A H S P BEFORE BULK PRODUCTION

EST. WT. 0.008 Kg

TO BE STAMPED OR MARKED WHERE INDICATED THUS # (LETTERS)

ALL SHARP EDGES AND CORNERS TO BE REMOVED UNLESS OTHERWISE STATED MACHINED CORNERS TO HAVE R OUT SIDE R INSIDE EQUIVALENT CHAMFERS ARE PERMISSIBLE

EXPLANATORY NOTE :-

10. MATERIAL QUOTED : STEEL 10 GOST 1050-74.

STEEL 10 = GRADE OF STEEL.

a) CHEMICAL COMPOSITION :

CARBON	=	0.07 - 0.14
SILICON	=	0.17 - 0.37
MANGANESE	=	0.35 - 0.65
CHROMIUM	=	0.15 (max)
PHOSPHORUS	=	0.035 (max)
SULPHUR	=	0.040 (max)
COPPER	=	0.25 (max)
NICKEL	=	0.25 (max)

b) MECHANICAL PROPERTIES :

TENSILE STRENGTH Kgf/mm²	=	34 (min)
YIELD POINT Kgf/mm²	=	21 (min)
% ELONGATION	=	31 (min)
% REDUCTION IN AREA	=	55 (min)

(C) EQUIVALENT MATERIAL
040 A 04 (EN 2A) BS:970

ISSUE	DATE	NATURE OF AMENDMENTS
C	1-7-10	4th ALT.COMM.Mtg.MINUTES POINT No.2 DT.26-10-09
B	9-12-87	AUTHY BK 82 - 394
A	24-9-87	AUTHY NOTN No: BK 83 - 11

DRN
CHD
TCD
APPD
DATE 4-5-89
SCALE:- 2 : 1
DIMENSIONS IN mm
TOLERANCE ON DIMNS UNLESS OTHERWISE STATED IS:2102-69
ALL THREADS TO CONFORM TO

MATERIAL:- STEEL 10 GOST 1050-74

USED ON CB 327-00-45

CONTROLLERATE OF QUALITY ASSURANCE (HEAVY VEHICLES) AVADI

TITLE LIMITER

D S CAT NUMBER

DRAWING NUMBER 3327-121-1

KVD No 18500

3327-139-3 ECKA

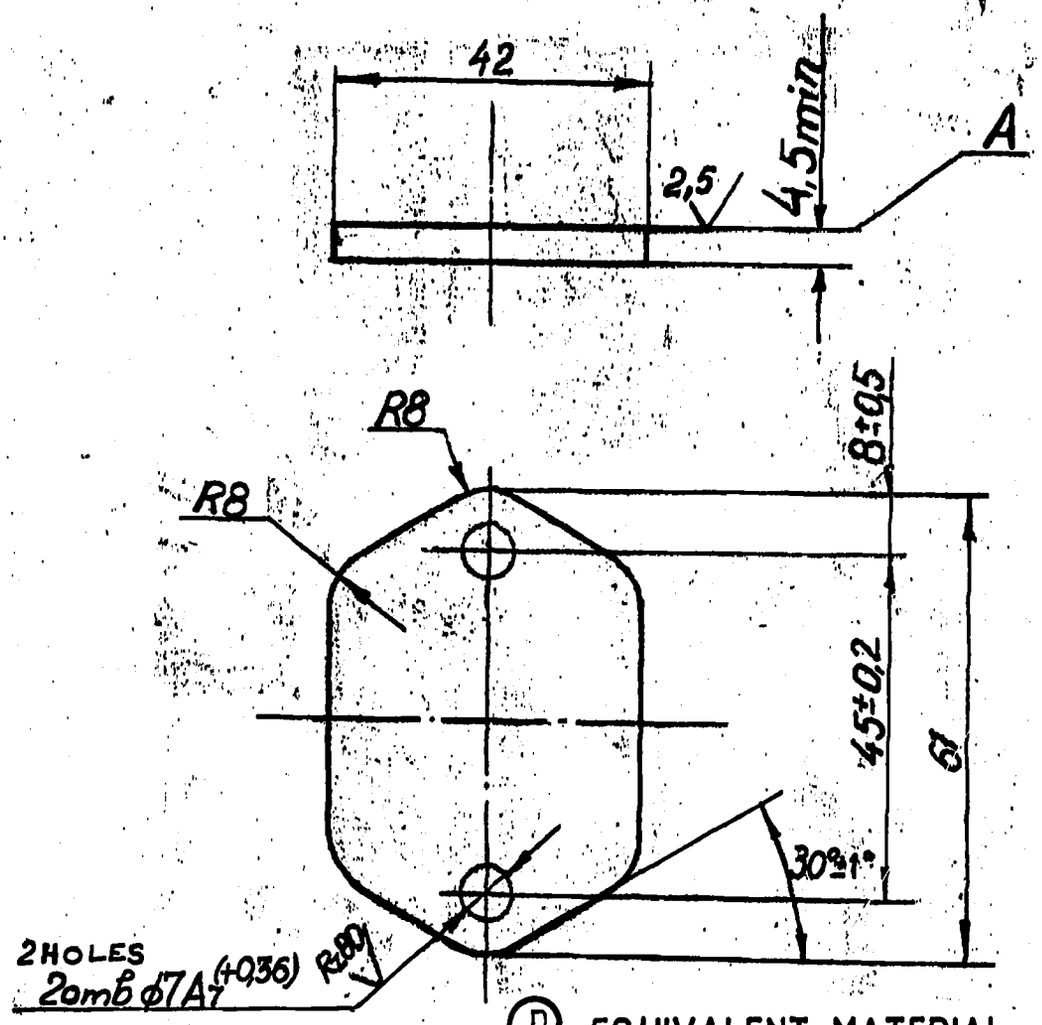

DRAWING INDIANISED BASED ON ISSUE 2

(D) EQUIVALENT MATERIAL
Gr. O IS:513-1994

1. Unspecified tolerances of dimensions ± 0.3mm.
2. Non-straightness of surface A should not exceed 0.05mm
3. (B) Coating: CD9, chromatizing in accordance with ~~DU 1-184~~ UA-569-84
4. Inward camber of edges and bevel upto 0.6 mm per side are allowed.

(A)** MATERIAL:- SHEET A6 GOST 19903-74
10 KП GOST 1577-~~70~~ 81

(A-8)

D	4-7-10	4th ALT. COMM. Mtg. MINTS POINT No.2 DT. 26-10-09	EST. MASS ~~0.0027Kg~~ 0.05 Kg (C)	TO BE STAMPED OR MARKED WHERE INDICATED THUS # (LETTERS)
C	21.9.93	BK 86-441		
B	15.2.88	AUTHY.NOTN.NO. BK 85-141	ALL SHARP EDGES AND CORNERS TO BE REMOVED UNLESS OTHERWISE STATED MACHINED CORNERS TO HAVE R OUTSIDE R INSIDE EQUIVALENT CHAMFERS ARE PERMISSIBLE.	
A	9.12.87	AUTHY.NOTN.BK 83-151		
ISSUE	DATE	NATURE OF AMENDMENTS		
DRN		SCALE - 1 : 1	MATERIAL ** SEE ABOVE	USED ON:- CG 327-00-45
CHD		DIMENSIONS IN mm.	CONTROLLERATE OF INSPECTION (HEAVY VEHICLES) AVADI	
TCD		TOLERANCE ON DIMNS UNLESS OTHERWISE STATED.	TITLE:- GASKET	
APRD				
DATE	14-6-86	ALL THREADS CONFORM TO	D S CAT NUMBER	DRAWING NUMBER 3327-139-3

3334 33

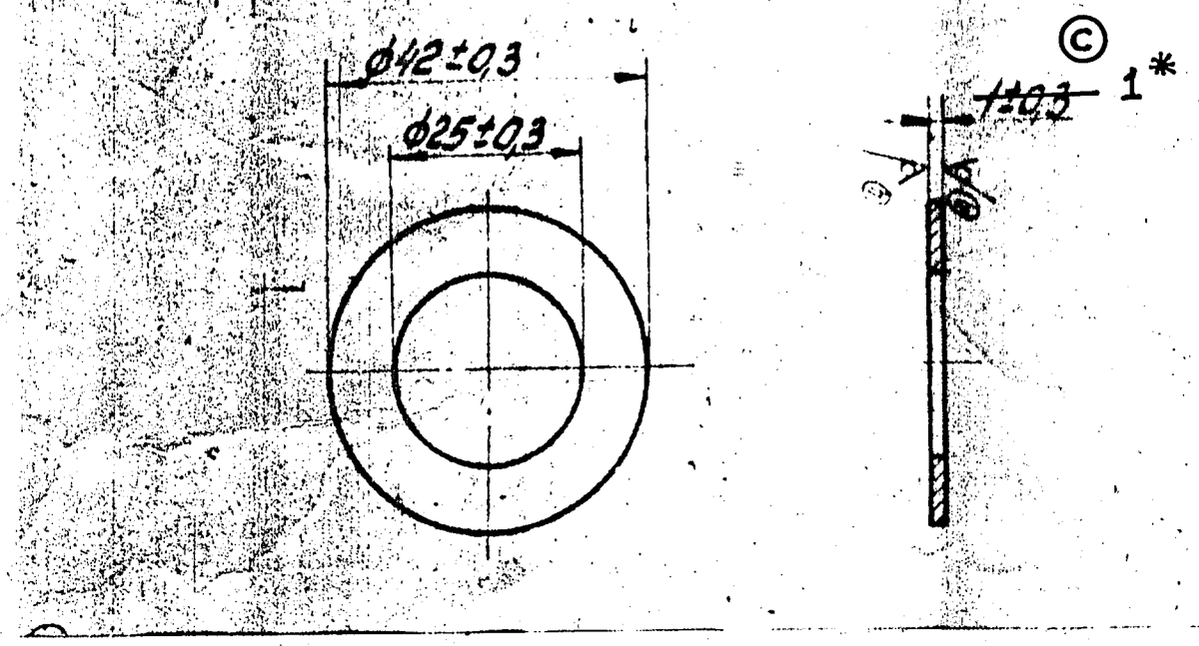

1) ....

2) AFTER BLANKING THE COMPONENT SHOULD BE STRAIGHTENED AND BURRS DRESSED

3) ....

4) COATING: Cd 9, CHROMATIZING IN ACCORDANCE WITH UJ-569-84 ~~UUJT 104~~ WITH ELIMINATION OF HYDROGEN EMBRITTLEMENT (B)

5) ALTERNATE MATERIAL:- STEEL 08KП GOST 1050-74 OR SHEET STEEL GOST 19903-74 (C)

6) *DIMENSIONS FOR REFERENCE.

(D) EQUIVALENT MATERIAL
Gr. O IS:513-1994

A8

D	20.3.10	4th Alt.Comm.Meet.Minutes Point No.1 Dt:26-10-09.	EST. MASS 0.006 Kg	TO BE STAMPED OR MARKED WHERE INDICATED THUS # (LETTERS)
C	21.9.93	BK 86-490		
B	19.3.88	AUTHY.NOTN.NO. BK 85-141	ALL SHARP EDGES AND CORNERS TO BE REMOVED UNLESS OTHERWISE STATED MACHINED CORNERS TO HAVE R OUTSIDE R INSIDE EQUIVALENT CHAMFERS ARE PERMISSIBLE.	
A	15.10.87	AUTHY.NOTN.BK 83-126		
ISSUE	DATE	NATURE OF AMENDMENTS		
DRN		SCALE - 1 : 1	MATERIAL STRIP 08ПС-М-2-1 GOST 503-77 81 (A)	USED ON:- CD 327-00-45 CD 3334-00-27
CHD		DIMENSIONS IN mm.	CONTROLLERATE OF INSPECTION (HEAVY VEHICLES) AVADI	
TCD		TOLERANCE ON DIMNS UNLESS OTHERWISE STATED.	TITLE:- SAFETY WASHER	
APPD				
DATE	09-5-86	ALL THREADS CONFORM TO	D S CAT NUMBER	DRAWING NUMBER 3334 33

3334-34-3

Rz40 (√) 10 (√) (B)

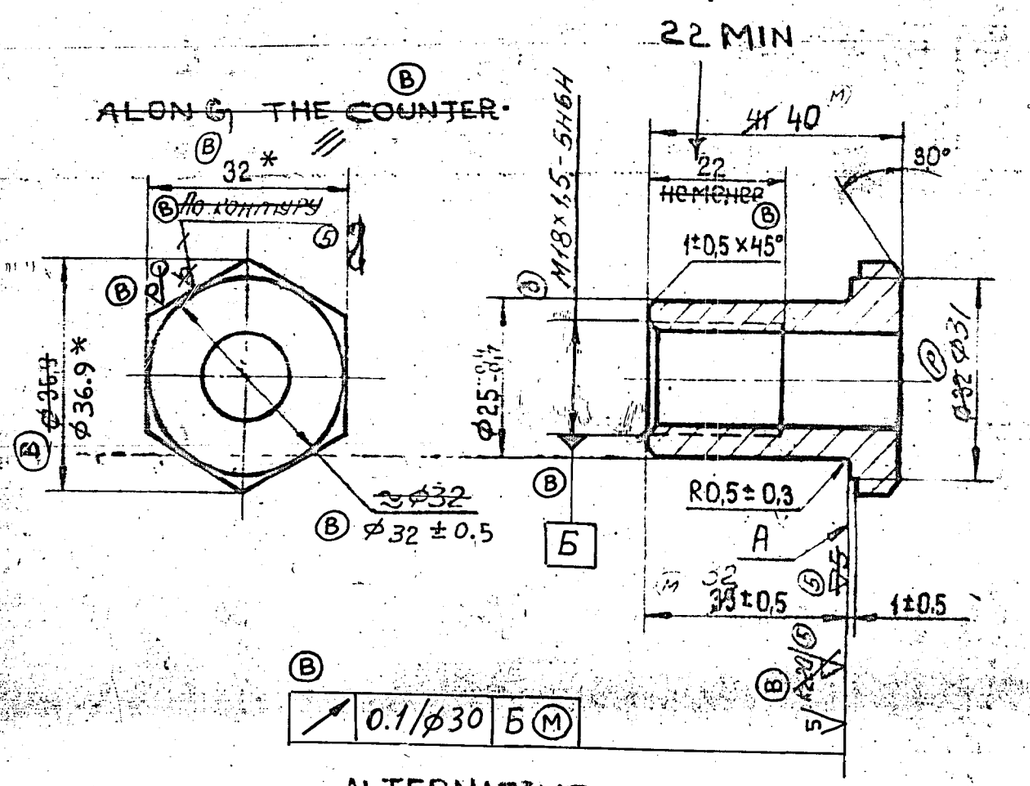

ALTERNATIVE:
Допускается

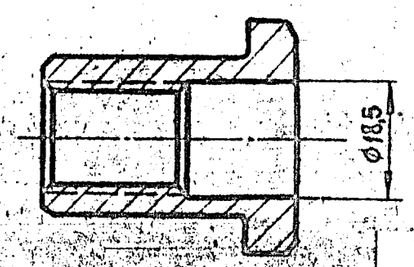

(A-8)

2. Dimensions with unspecified tolerances should be maintained as per ~~accuracy class 7 OST 1010~~. H14, h14, ±IT14/2 (B)
3. Technical requirements for thread as per standard 82021.00
(B) ~~4. Run out of face A relative to the axis of thread should not exceed 0.1 mm at ⌀30 mm (MMC)~~
5. Cutting in of tool to a depth upto 0.3 mm is allowed at ⌀ 25 during facing of end face A.
6. Sharp edges should be blunted.
(A) 8. Coating: Cd 9, chromatizing in accordance with ~~УЧ.Л 104~~ УЧ-569-84 with elimination of hydrogen embrittlement
9. There may be no coating on internal surfaces.
(B) ~~10. Dimensions should be checked before coating.~~
(B) ~~11. The component may be manufactured from hexagon bar 32 (5) Gost 8560-78.~~
(B) ~~12. Rolled stock class 4 group B Gost 1051-73 may be used. To ensure high quality of coating it is allowed to rectify surface defects with reduction of its size as per accuracy class 5.~~
Alternate material: Steel, grades 40 and 50, Gost 1050-74
(B) * DIMENSION FOR REFERENCE.
COATING: ZN 3, CHROMATIZING IN ACCORDANCE WITH УЧ 483-82 WITH ELIMINATION OF HYDROGEN EMBRITTLEMENT.

(A8)

ISSUE	DATE	NATURE OF AMENDMENTS
B	11.2.97	AUTHY NOTN No. BK 88-261
A	19.3.88	AUTHY. NOTN. NO. BK 85-141

DRN
CHD
TCD
APPD
DATE 09-5-86

SCALE - 1:1
DIMENSIONS IN mm.
TOLERANCE ON DIMNS UNLESS OTHERWISE STATED.
ALL THREADS CONFORM TO

EST. MASS 0.098 Kg

TO BE STAMPED OR MARKED WHERE INDICATED THUS # (LETTERS)

ALL SHARP EDGES AND CORNERS TO BE REMOVED UNLESS OTHERWISE STATED MACHINED CORNERS TO HAVE R OUTSIDE R INSIDE EQUIVALENT CHAMFERS ARE PERMISSIBLE.

MATERIAL:- HEXAGON BAR 32-A11 GOST 8560-78, 45-6 GOST 1051-73

USED ON:- СБ 327-00-45

CONTROLLERATE OF INSPECTION (HEAVY VEHICLES) AVADI

TITLE:- PUMP SHAFT NUT

D S CAT NUMBER

DRAWING NUMBER 3334-34-3

Инв. № подлинника | Подпись и дата | Взамен инв. № | Инв. № дубл. | Подпись и дата

DRAWING NUMBER
3334-50

ECKA

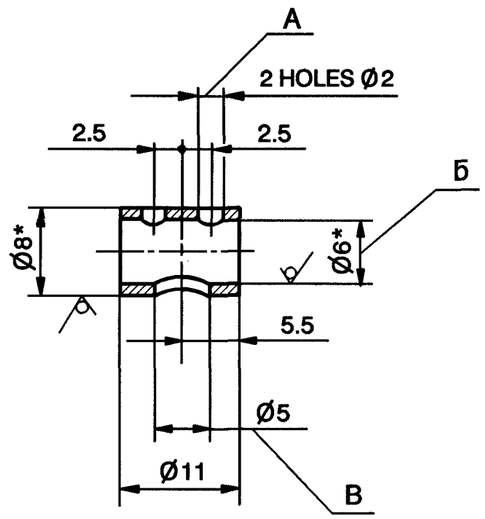

TECHNICAL REQUIREMENTS IN RUSSIAN

1. Материал-заменитель медь марки М3 ГОСТ 859-78.
(5) ~~1. Заменитель материала медь М3 ГОСТ 859-66.~~
2. Неуказанные предельные отклонения размеров: отверстий по A_7, валов по B_7, остальных - по CM_8
3. Допускается изготовление из трубы ф 7х1
4. Отжечь.
5. Заусенцы на наружной поверхности не допускаются.
6. При пересечении отверстий А, Б и В допускается наличие острых кромок.
7. * Размеры для справок.

TECHNICAL REQUIREMENTS - TRANSLATED

Rz80

1. ALTERNATE MATERIAL : COPPER, GRADE M3 GOST 859-78.
2. UNSPECIFIED TOLERANCES OF DIMENSION FOR HOLES AS PER A7 FOR SHAFTS AS PER B7 AND FOR THE REST OF THE PARTS AS PER CM8.
3. MAY BE MANUFACTURED FROM PIPE Ø7x1.
4. TO BE ANNEALED.
5. BURRS ON OUTER SURFACE ARE NOT ALLOWED.
6. SHARP EDGES ARE ALLOWED AT PLACES OF CONNECTION OF HOLES A, Б AND B.
7. * DIMENSIONS FOR REFERENCE.

EXPLANATORY NOTE :

8. REFERENCE MATERIAL QUOTED:

PIPE FROM COPPER OF GRADE M2, DRAWN HARD WITH OUTER DIAMETER 8mm AND WALL THICKNESS 1mm.
MATERIAL TO BE AS PER GOST 859-78.

b) CHEMICAL COMPOSITION :

GRADE	(Cu+Ag) % (min)	IMPURITIES (MAX) %								
		BISMUTH	ANTIMONY	ARSENIC	IRON	NICKEL	LEAD	TIN	SULPHUR	OXYGEN
M2	99.7	0.002	0.005	0.01	0.05	0.2	0.01	0.05	0.01	0.07
M3	99.5	0.003	0.05	0.01	0.05	0.2	0.05	0.05	0.01	0.08

Cb 3312-00-22
Cb 3312-00-15 (5B)
Cb 327-00-73
* Cb 327-00-47-01 (5A)

PILOT SAMPLE SHOULD BE APPROVED BEFORE BULK PRODUCTION.

EST. WT. 0.0018 Kg

TO BE STAMPED OR MARKED WHERE INDICATED THUS # (LETTERS)

ALL SHARP EDGES AND CORNERS TO BE REMOVED UNLESS OTHERWISE STATED MACHINED CORNERS TO HAVE R OUTSIDE R INSIDE EQUIVALENT CHAMFERS ARE PERMISSIBLE.

ISSUE	DATE	NATURE OF AMENDMENTS
5B	04.01.22	USED ON NUMBER ADDED.
5A	06.08.19	USED ON NUMBER ADDED.

DRN	Sd/=
CHD	Sd/=
APPD	Sd/=
DATE	29.01.88
SCALE:-	2 : 1
DIMENSIONS IN mm	
TOLERANCE ON DIMNS UNLESS OTHERWISE STATED IS : 2102 - 69	
ALL THREADS TO CONFORM TO	

MATERIAL :- PIPE M2 - T8 x1 GOST 617-72

USED ON :- Cb 530-200 * Cb 3329-00-13 Cb 330-1013 CQA(HV)508.307E

CONTROLLERATE OF QUALITY ASSURANCE (HEAVY VEHICLES) AVADI

TITLE :- SEAL

D S CAT NUMBER

DRAWING NUMBER 3334-50

N. S (N SARAVANAN) SSO-I Dt. 28 Aug 2019

DRG. RE-INDIANIZED BASED ON RUSSIAN ORIGINAL ISSUE - 5 (BK 79-400)
COMMON TO V46-6 & V92S2
KVD No. 63068

A8
SIZE A3

67353

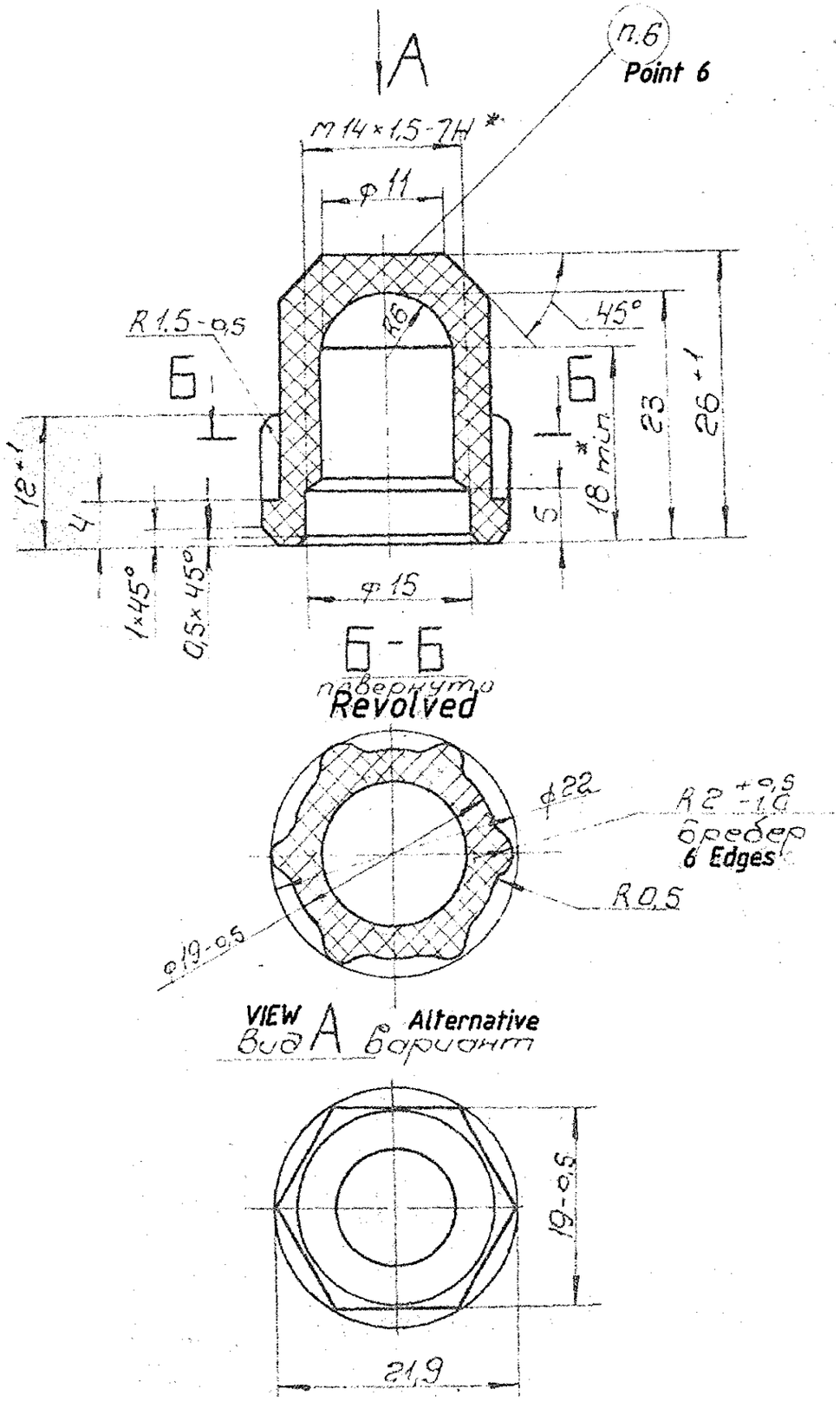

1. IT IS ALLOWED TO UTILIZE PHENOLIC PLASTIC 01-040-02 GOST 5689-73 AS SUBSTITUTE MATERIAL.
2. THE COMPONENT COLOUR IS BLACK FOR SERIAL MANUFACTURER.
3. DIMENSIONS WITHOUT DEVIATIONS SHOULD BE ENSURED AS PER ACCURACY CLASS 7 IN COMPLIANCE WITH OST 1010.
4. TROPICALIZED VERSION OF THE COMPONENT MUST BE MANUFACTURED OUT OF PHENOLIC PLASTIC B x 1-090-34 OR B x 3-090 -14 AS PER GOST 5689-73 AND MARKED WITH LETTER "T" OR BY A POINT MARK APPLIED WITH YELLOW OR WHITE PAINT. WEIGHT OF THE ITEM IN TROPICALISED VERSION SHOULD BE 0.0065.
5. * DIMENSIONS ARE SUBJECTED TO COMPULSORY CHECKING. THE REMAINING DIMENSIONS ARE ENSURED BY A TOOL.
6. MARK THE SERIAL NUMBER OF THE PRESS MOULD WITH TYPE n0-3 AS PER GOST 2930-62.
7. THE REMAINING REQUIREMENTS ARE AS PER SPECIFICATIONS 6-05-1538-72-

ISSUE	DATE	REFERENCE			
APPROVED			67353.	Group No. 40008 KD.	A14 17
CHECKED	K. Damodara	3518	CAP NUT	SHEET 1 of 1 / MASS 0.0062 / SCALE 2:1	
DRAWN		26/8/86	MATERIAL: Phenolic plastic 03-010-02 as per Gost 5689-73	HEAVY VEHICLES FACTORY AVADI	

Drawing No:
SB 315-606-5

REVISIONS				
SL.No.	REV.	DESCRIPTION	DATE	APPRVED

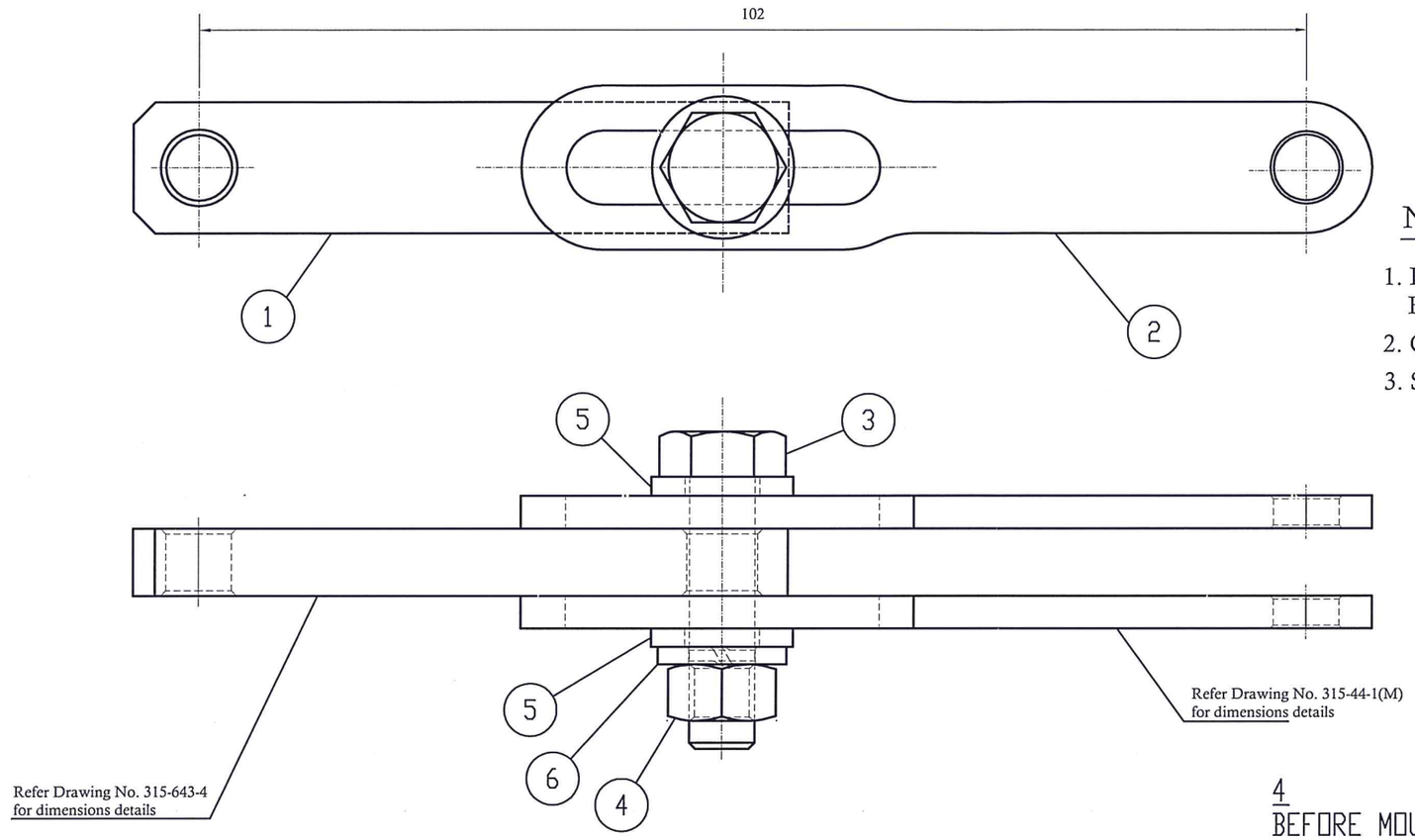

NOTE: -

1. PILOT SAMPLE SHOULD BE APPROVED BY USER BEFORE BULK PRODUCTION.
2. COATING : CHEMICAL OXIDIZING , OIL FINISHING.
3. SHARP EDGES ARE TO BE BLUNTED.

4
BEFORE MOUNTING SPRING WASHER 353-23 SHOULD BE COMPRESSED UNTILL THE ENDS CONTACT FOR 24 HOURS.AFTER THAT, THE GAP BETWEEN THE SPREAD ENDS SHOULD BE LESS THAN 1.67 MM.THE THICKNESS OF WASHER.

ITEM NO.	TITLE	SIZE	MATERIAL/MAKE	PART NUMBER	QTY.	REMARKS
1	JOINT CARRIER	60X12X6.2	STEEL 20 GOST 1050-74	315-643-4	1	Refer Part No. for other details(315-643-4)
2	HINGE LINK	78X15X3	STEEL 45 GOST 1051-73	315-44-1(M)	2	Refer Part No. for other details(315-44-1(M)
3	HEX. BOLT	M6X25 L	STEEL 45 GOST 1050-74 (OR) 45 C8 to IS 1570	356-84(M)	1	Refer Part No. for other details(356-84(M)
4	HEX. NUT	M6	EN-19/TVS	351-06	1	Refer Part No. for other details(351-06)
5	PLAIN WASHER	ID-Ø6x1.75T	STD	---	2	ND
6	SPRING WASHER	ID - Ø6	65G 06 GOST 6402- 70 (OR) 75C6 TO IS:2507 (OR) EN 42J BS : 970	353-23	1	Refer Part No. for other details(353-03)

ENGINE FACTORY AVADI

THIRD ANGLE

DRAWN		25/10/17	TITLE	TIE ROD
CHECKED		31/10/00	USED ON	SB 327-00-47-01
APPROVED		Rahul	PROJECT	
USER			CUSTOMER	
DATE				

ALL DIMENSION ARE IN MM UNLESS OTHERWISE SPECIFIED

SHT NO: 1 OF 6

DRG NO:- SB 315-606-5(M) # #

IF DOUBT PLEASE ASK, DON'T ASSUME

DRG.No.
315-44-1(M)

REVISIONS				
S.NO:	REV.	DESCRIPTION	DATE	APPROVED

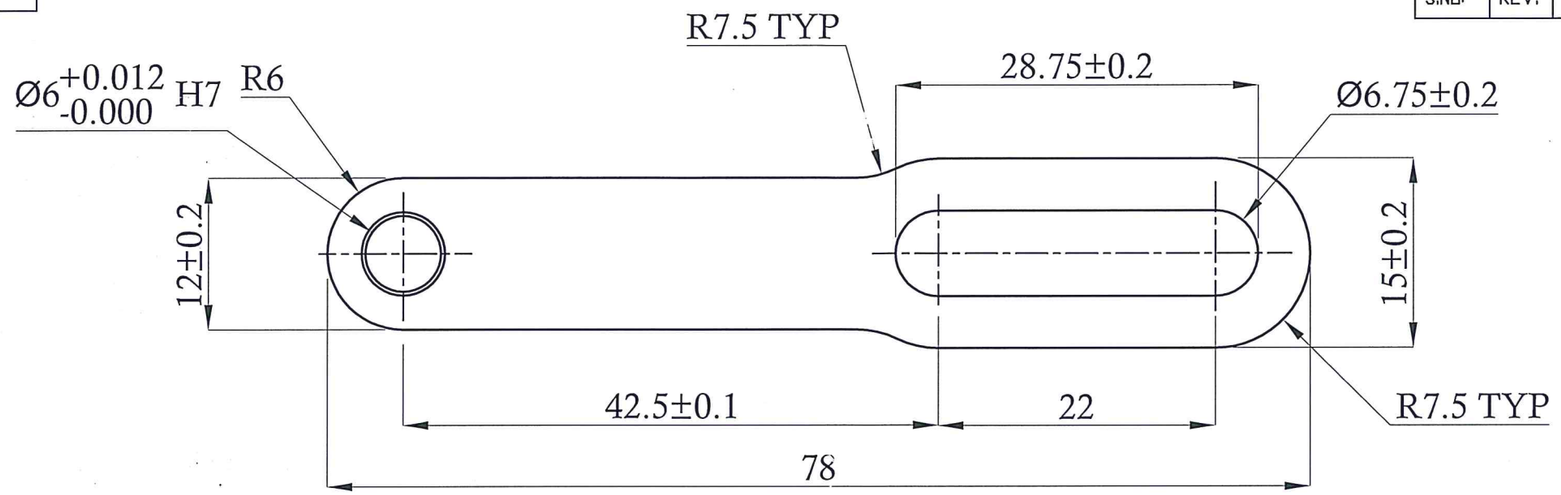

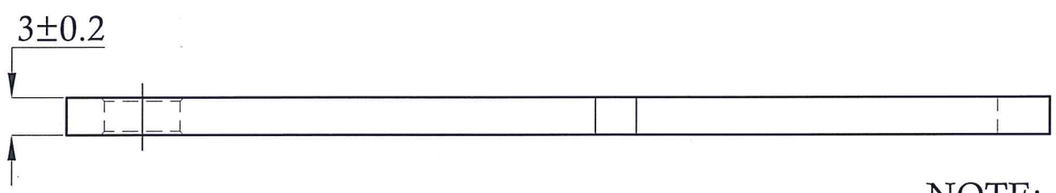

NOTE: -

1. PILOT SAMPLE SHOULD BE APPROVED BY USER BEFORE BULK PRODUCTION.
2. COATING : CHEMICAL OXIDIZING , OIL FINISHING.
3. SHARP EDGES ARE TO BE BLUNTED.

MATERIAL : STEEL 45 GOST 1051-73

ALTERNATE MATERIAL : STEEL 40 AND STEEL 50 GOST 1050-74

TOLERANCE	
X	±0.5
X.X	±0.1
X.XX	±0.05
X.XXX	±0.02

MATERIAL.	STEEL 45 GOST 1051-73	QTY.	02 Nos	STAGE	FINAL
SIZE	78X15X3	HEAT TREATMENT	---	FINISH MACHINING PROCESS	DRILLING
WEIGHT	0.02 kg (Approx)	HRC	---	FINAL PROCESS	CHEMICAL OXIDIZING

ENGINE FACTORY AVADI

THIRD ANGLE

DRAWN		TITLE	HINGE LINK
CHECKED		USED ON	SB 315-606-5
APPROVED	Rabat		
USER		CUSTOMER	
DATE			

ALL DIMENSION ARE IN MM UNLESS OTHERWISE SPECIFIED

SHT NO: 2 OF 6

DRG NO:- 315-44-1(M) # #

IF DOUBT PLEASE ASK, DON'T ASSUME

315-643-4

ЕСКД

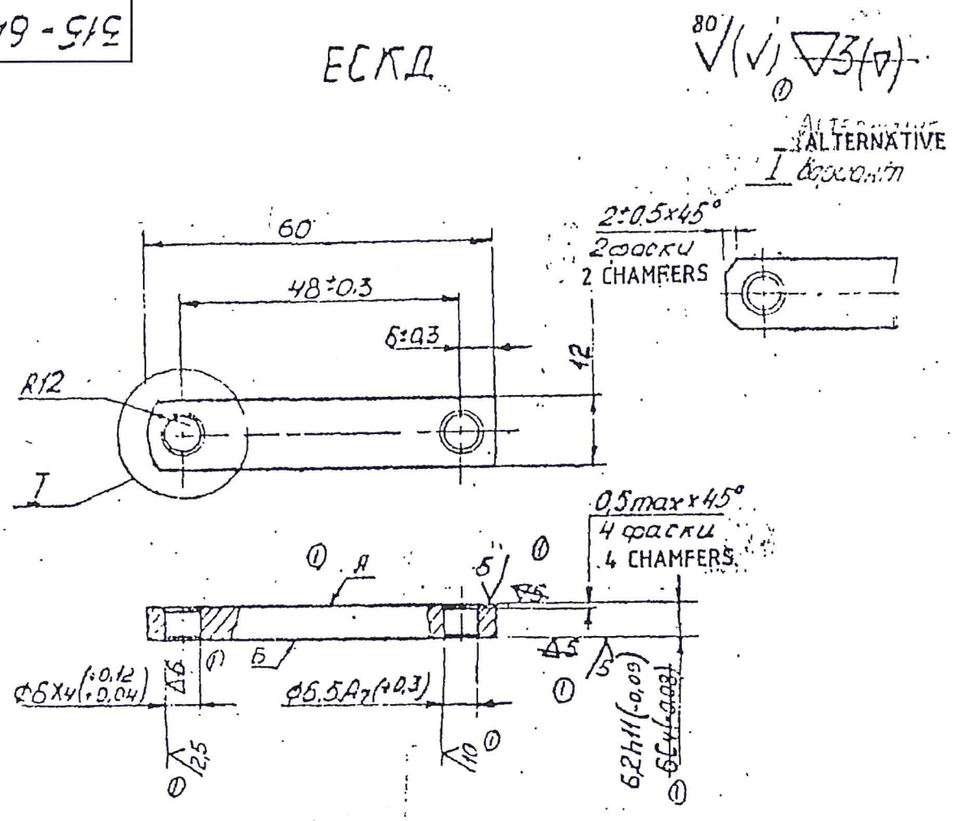

TECHNICAL REQUIREMENTS IN RUSSIAN

1 ~~Группа контроля V по ГТ-11~~

2 Неуказанные предельные отклонения размеров выполнять с точностью ±0,3 мм.

3 Покрытие Хим. Окс прм

4. По наружному контуру допускается скол до 0,6 мм. на сторону

5. Допускается изготовление детали из стали 10 ГОСТ 1050-88.74

6. На поверхности А или Б, по наружному контуру допускается необработанный поясок шириной не более 0,5 мм

TECHNICAL REQUIREMENTS - TRANSLATED

1. DELETED
2. UNSPECIFIED LIMIT DEVIATIONS OF DIMENSIONS ARE TO BE MADE WITH ACCURACY OF ±0·3mm.
3. COATING: CHEMICAL OXIDIZING, OIL FINISHING.
4. CHIPPING UPTO 0·6mm PER SIDE IS ALLOWED ALONG OUTER PROFILE.
5. COMPONENT MAY BE MANUFACTURED FROM STEEL 10, GOST 1050-74.
6. UNMACHINED SEAT NOT EXCEEDING 0·5mm WIDE IS ALLOWED ON SURFACES 'A' AND 'Б' ALONG OUTER PROFILE.

PILOT SAMPLE SHOULD BE APPROVED BY A H S P BEFORE BULK PRODUCTION

			EST MASS 0.030 Kg	TO BE STAMPED OR MARKED WHERE INDICATED THUS # (LETTERS)
			ALL SHARP EDGES AND CORNERS TO BE REMOVED UNLESS OTHERWISE STATED MACHINED CORNERS TO HAVE R OUTSIDE R INSIDE EQUIVALENT CHAMFERS ARE PERMISSIBLE	
ISSUE	DATE	NATURE OF AMENDMENTS		
DRN		SCALE:- 1:1	MATERIAL:- STEEL 20, GOST 1050-74	USED ON:- Cb 315-606-5
CHD		DIMENSIONS IN mm		
TCD		TOLERANCE ON DIMNS UNLESS OTHERWISE STATED	CONTROLLERATE OF INSPECTION (HEAVY VEHICLES) AVADI	
APPD			TITLE:- JOINT CARRIER	
DATE 29·1·88		ALL THREADS CONFORM TO	D S CAT NUMBER	DRAWING NUMBER 315-643-4