FOR EXPLANATION OF DIMENSIONING ETC, SEE ARDE NOTE SHT.NO.1 (LATEST ISSUE).

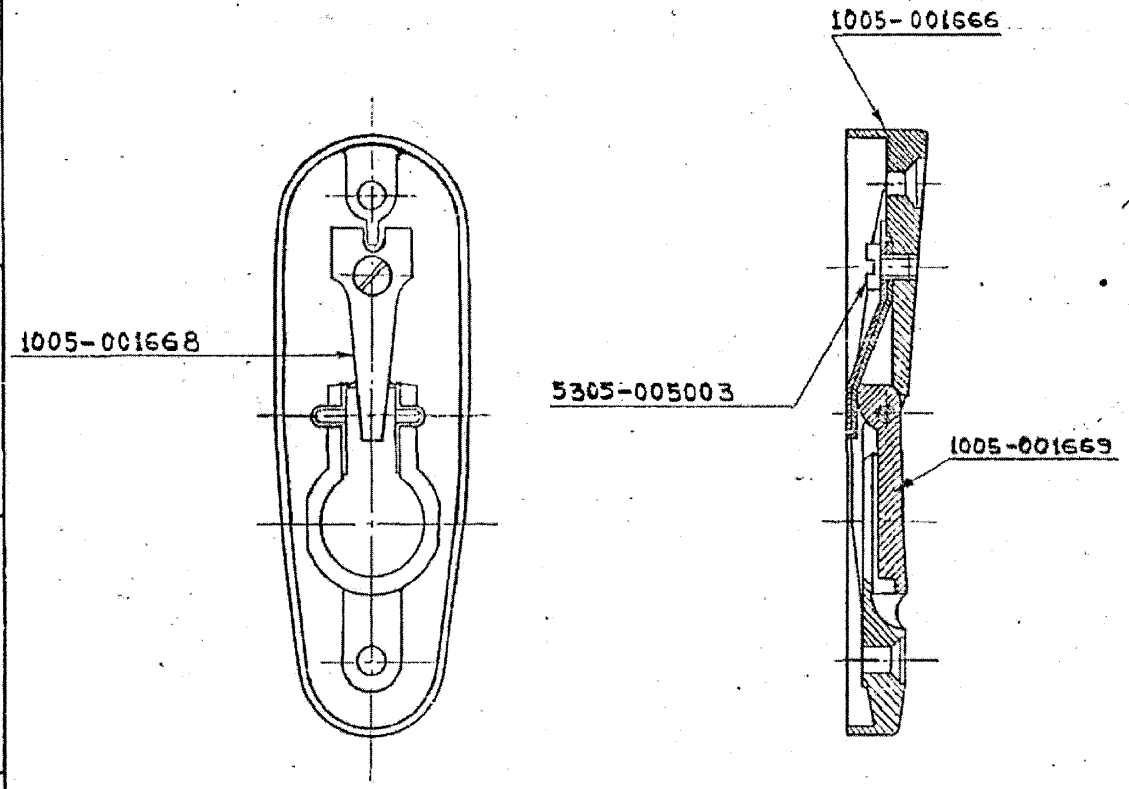

आरेखण
प्रतिलिपि
Certified
of drg.
Jr. Wor
STAN

NOTE :-
FOR DETAILS OF PROCUREMENT, MANUFACTURE AND QUALITY ASSURANCE SEE SPECN NO. CQA(SA) 1

NSN: B1/1005-72-0000665

METRIC

AUTHY.	DATE	ZONE	BRIEF RECORD.	SIG.
26521-SA	12-07-10		NSN ADDED	
23283-SA	8-3-96		NOTE ADDED	
20776-SA	10.5.90		CLOTH NEGATIVE RETRACED AND DRG. RESEALED.	
			PREVIOUS D.C.(I). NOS. 10448-SA, 10991-SA & 15895.	COPY

	DATE	NAME
DGN.		
DRN.		
CHD.		
TRD.		A. BARIK
COMP		
	DT. 10.5.90	T/C, DO

SCALE :- 1:1

SEALED. D.C.(I) 10448-SA, DT. 13.4.70

ASSY. 1005-001594, 1005-001595 & 1005-001596.

MATERIAL :-

DIMENSIONS ARE IN MILLIMETRES

PLATE, BUTT, ASSEMBLY.

CQA(SA) ICHAPUR

APPROVED. DT. 19.6.67
CL. NEG. RE-TRACED

DESIGNER'S REF. ARDE 657/227

DS.CAT.NO. 1005-001665