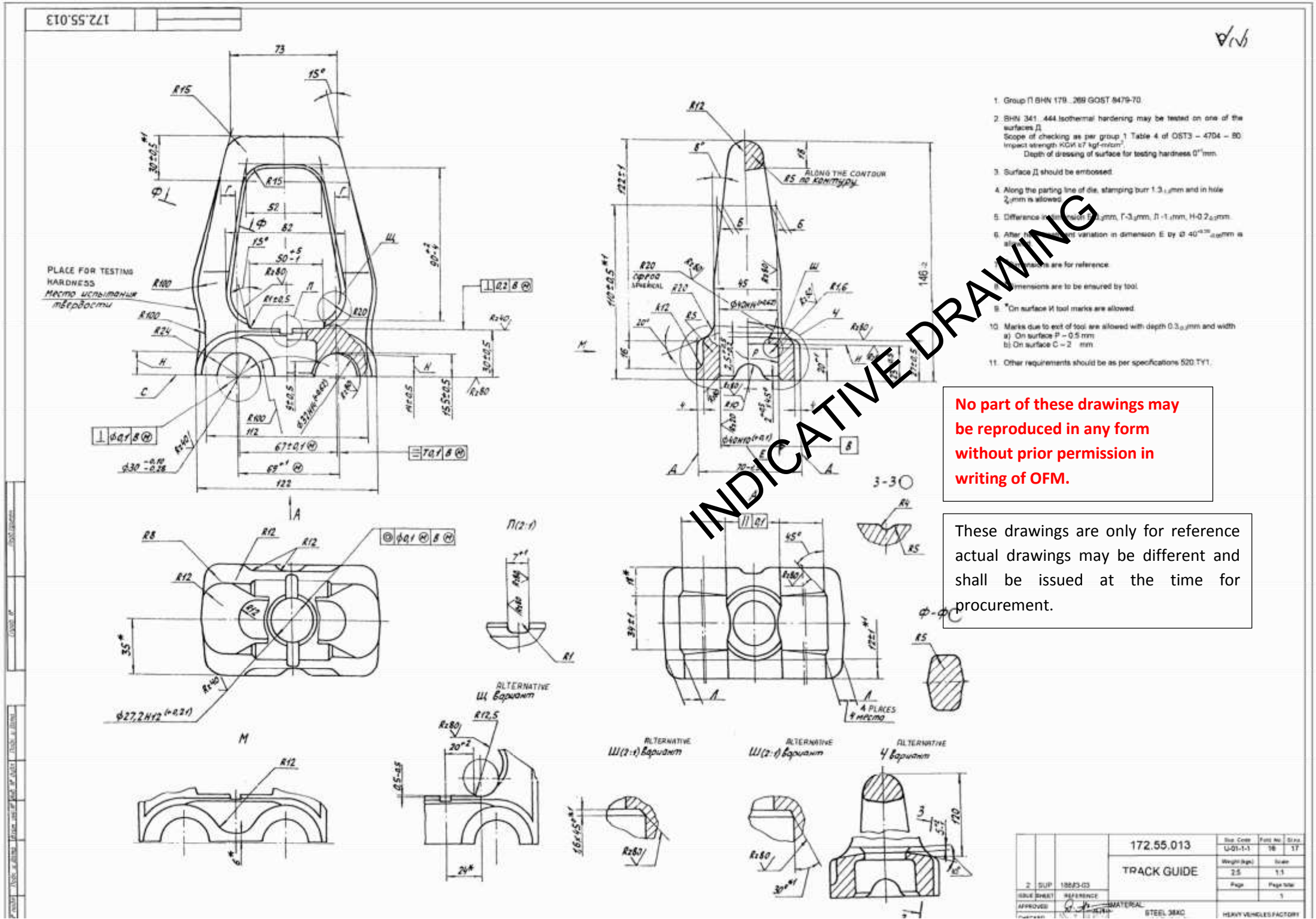

1. Group П BHN 179...269 GOST 8479-70.
2. BHN 341...444 Isothermal hardening may be tested on one of the surfaces Д.
   Scope of checking as per group 1 Table 4 of OST3 – 4704 – 80
   Impact strength КСИ ≥7 kgf-m/cm².
   Depth of dressing of surface for testing hardness 0^{+1}mm.
3. Surface Д should be embossed.
4. Along the parting line of die, stamping burr 1.3$_{-1.3}$mm and in hole 2$_{-1}$mm is allowed.
5. Difference in dimension Е 0.3$_{-3}$mm, Г-3$_{-3}$mm, Л -1$_{-1}$mm, Н-0.2$_{-0.2}$mm.
6. After h[illegible]nt variation in dimension Е by Ø 40$^{+0.35}_{-0.05}$mm is allowed.
7. [illegible]nsions are for reference.
8. [illegible]imensions are to be ensured by tool.
9. *On surface И tool marks are allowed.
10. Marks due to exit of tool are allowed with depth 0.3$_{-0.3}$mm and width
    a) On surface Р – 0.5 mm
    b) On surface С – 2 mm
11. Other requirements should be as per specifications 520.TY1.

INDICATIVE DRAWING

No part of these drawings may be reproduced in any form without prior permission in writing of OFM.

These drawings are only for reference actual drawings may be different and shall be issued at the time for procurement.