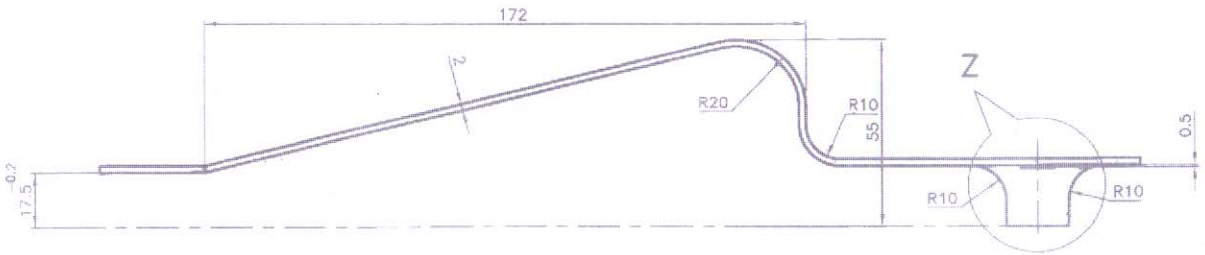


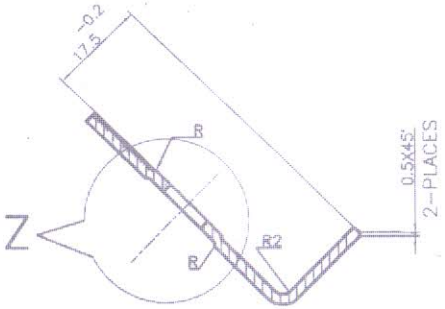


SECTION 'A-A'

ENLARGED VIEW

UN CONTROLLED COPY

CERTIFIED CORRECT COPY
OF APPROVED DRAWINGS
AT THIS DATE 21/04/18
Design & Drawing Office
Ordnance Factory,
Tiruchirappalli-620016.

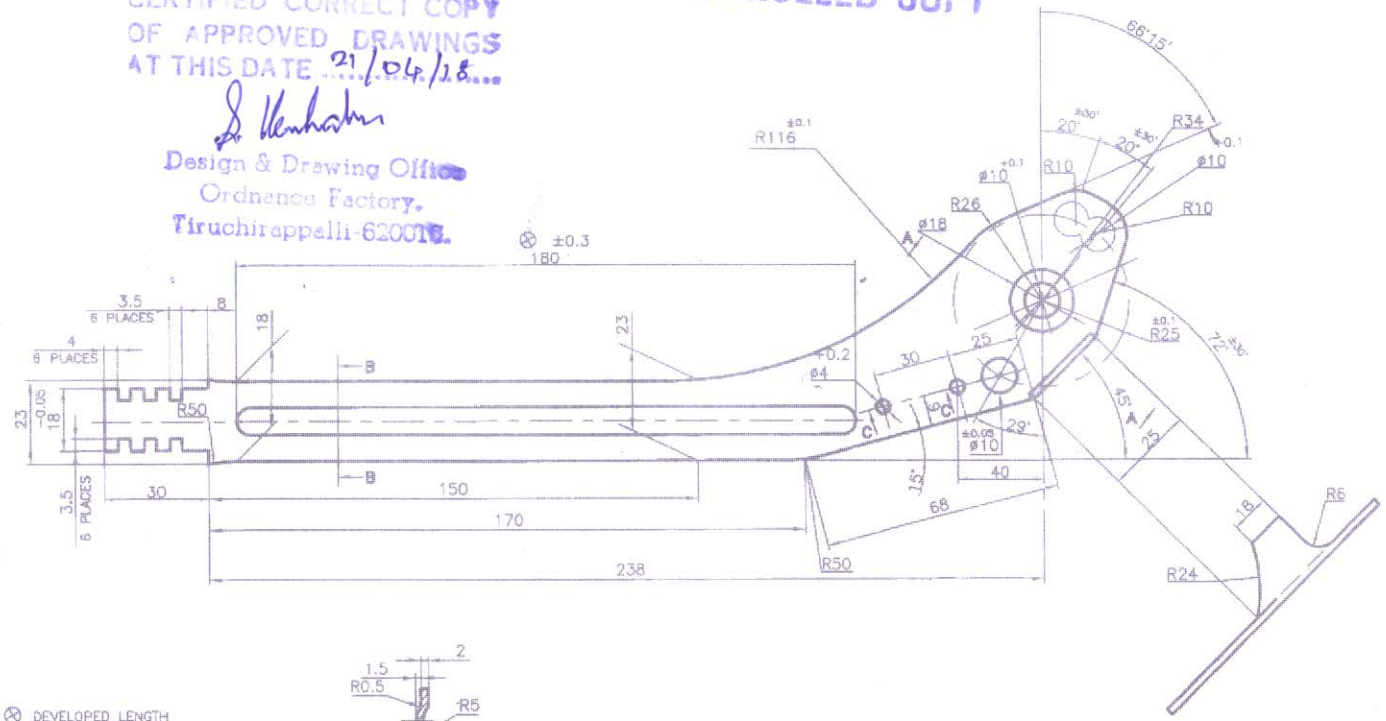


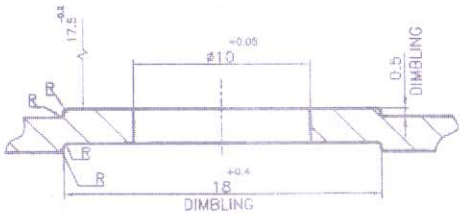


ENLARGED VIEW OF 'Z'

⊗ DEVELOPED LENGTH

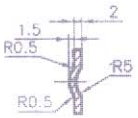


SECTION B-B

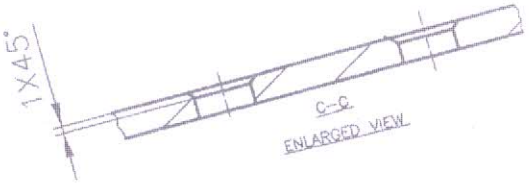


C-C
ENLARGED VIEW

MATERIAL : IS: 2507 -1975, GRADE 1, DESIGNATION, 45C8.
(OR) BS 1449, PART-1, 1983, GRADE-CS 40 (OR) CS50.

HARDNESS: 320 - 360 HV

PROTECTIVE FINISH- :- ON ASSEMBLY

DIMENSIONS ARE IN mm.
UNTOLERATED DIMNS. AS PER IS : 2102 (MED)

MISSING DIMENSIONS & VIEWS ARE GIVEN ON 20/03/2018

DIMENSIONS ARE IN mm.
UNTOLERATED DIMNS. AS PER IS : 2102 (MED)
MARK DRAWING No.

| PART NO. | DESCRIPTIONS | NO OFF | MATERIAL | TREATMENT | REMARKS |
|---|---|---|---|---|---|
| | SIGNATURE & DATE | SUB: STOCK PLATE L.H | | | SCALE NTS |
| TRACED | | FOR: BUTT ASSY. | | | STORE DRG.NO. |
| DRAWN | 21/7/14 | OF : 40MM MGL | | | |
| CHECKED | | DES.REF.NO. REDRAWN ON 20/02/18 | | | OPERATION NO. |
| HOS/D&DO | | DRG. No.: 30P 5012 | | | |
| HOS/ OFFICER FOR MGL | | ORDNANCE FACTORY TIRUCHIRAPPALLI-16. | | | SHEETS: 1 |
| OFFICER/ D&DO | | | | | SHEET No.: 1 |
| REDRAWN ON 20/03/2018 | | | | | |
| AMENDMENTS | SIG. & DATE | APPROVED ON: 25/02/2015 | | | |