DRG NO SK-02057

ACTUAL SIZE

HARDNESS:-

COMPONENT MUST CONFORM TO THE FOLLOWING HARDNESS NUMERALS AT THE POSITION INDICATED

LETTER	D.P.N.
N	400-500

केवल निविदा हेतु
सन्दर्भ माँग पत्र सं0 210110109
दिनांक 30/11/2021

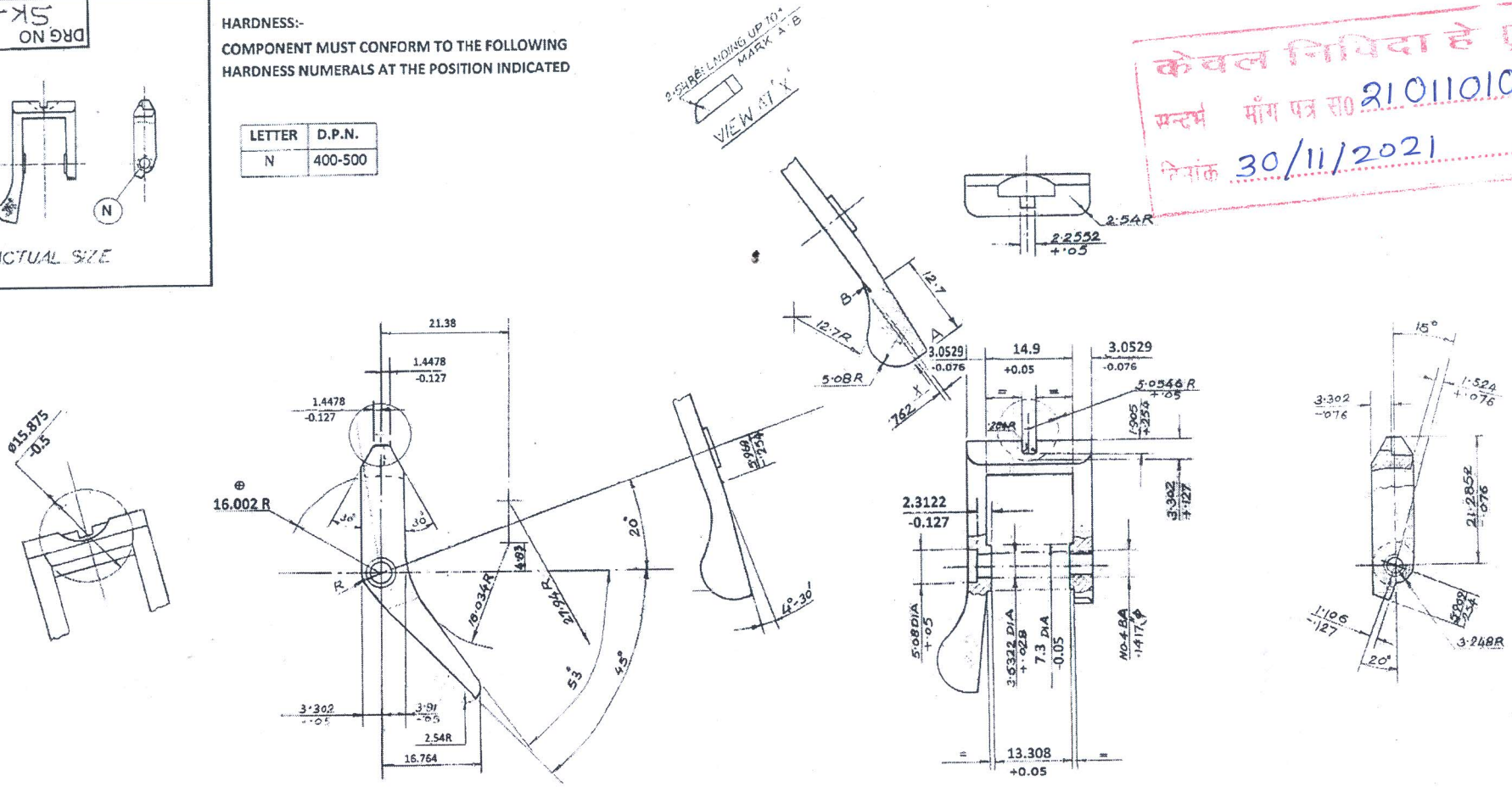

FINISH:- ELECTROSTATIC POWDER COATING.

A TOLERANCE OF -0.10 IS ALLOWED ON ALL PROFILES.

DIMENSIONS MARKED THUS ⊗ MUST STRICTILY BE ADHERED TO.

ALL DIMENSIONS ARE IN mm UNLESS OTHERWISE STATED.

THIRD ANGLE PROJECTION.

MATERIAL FOR MIM COMPONENT:-

MIM4605

C:- 0.4-0.6%, Ni:- 1.5-2.5%

Si:- 1.0%

Mo:- 0.2- 0.5%, Fe:- BALANCE

SINTERED DENSITY:- 7.5 g/cm³.

HARDNESS:40-45 HRC by Hardening & Tempering (Through Hardening)

ITEM	DESCRIPTION	NOOFF	MATERIAL	TREATMENT	STD.	REMARKS

SCALE NTS	COMPONENT 0.32" REVOLVER	STORE DRG. NO. 32-0100	FIELD GUN FACTORY KANPUR
UNSPECIFIED TOLERANCES IS : 2102 (MEDIUM)			APPROVED
2021 DATE NAME	CATCH BARREL		
DRN.			
CHD.			DO/SHOP AD/ODC
TCD.			
COMP.			DRG. NO. SK-02057
MM/DOO			
MM/SEC. 24.8			SHTS SHT. NO. 1