DRG. No.:

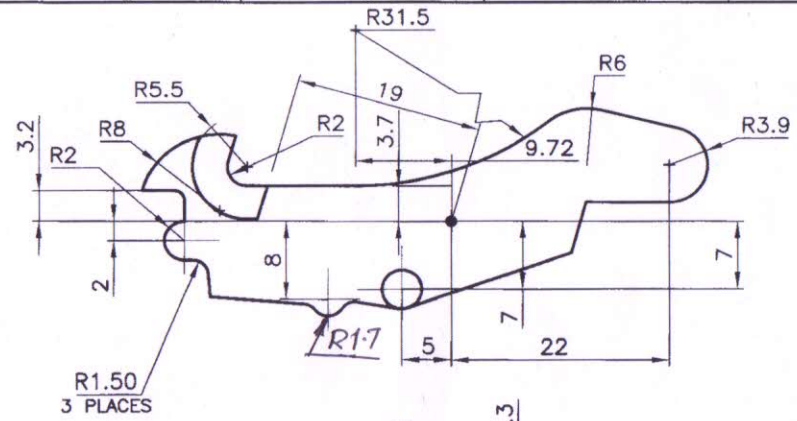

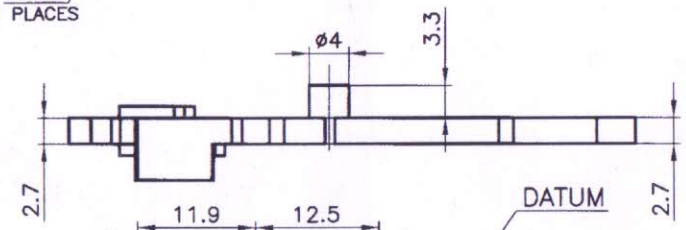

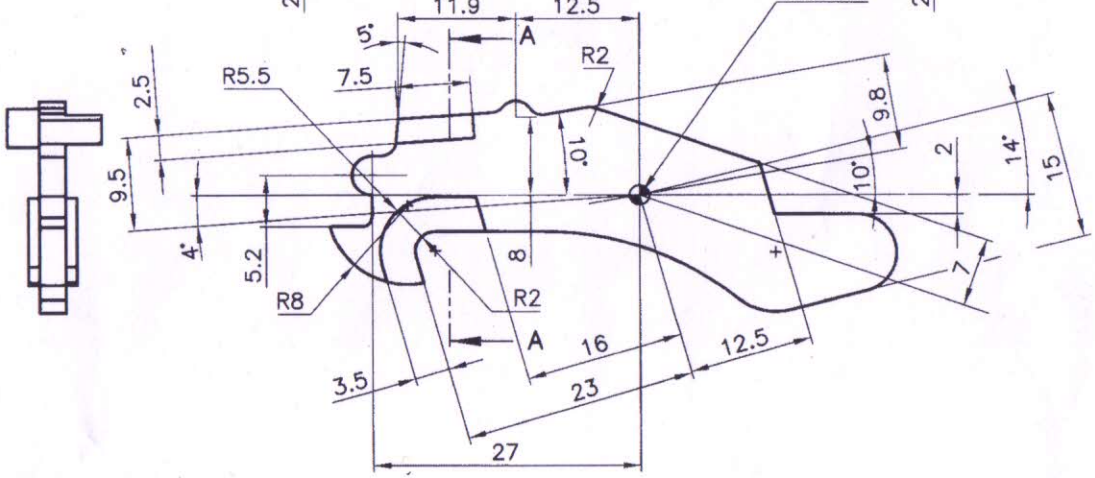

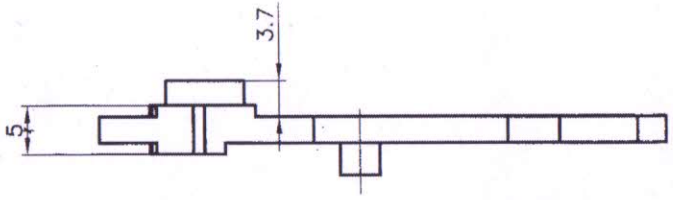

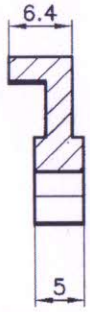

SECTION A–A

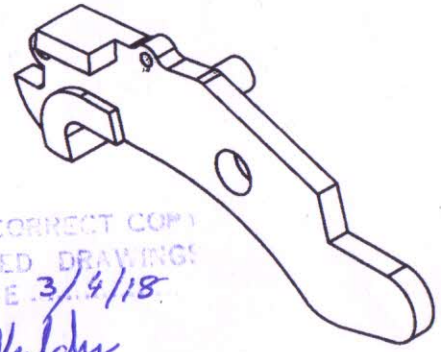

UN CONTROLLED COPY

CERTIFIED CORRECT COPY OF APPROVED DRAWING AT THIS DATE 3/4/18
S. Venkatesan
Design & Drawing Office
Ordnance Factory
Tiruchirappalli

DIMENSIONS ARE IN mm.
DRAFT ANGLE FOR HOLES 1°
CASTING RADII R 1mm

UNTOLERATED DIMNS ARE AS PER IS : 11166–1984 CLASS I OF INVESTMENT CASTING. CASTING TO BE SUPPLIED IN NORMALISED CONDITION.

MATERIAL:–
BS:3146 PART –1: 1974
TYPE – CLASS: 5 GRADE–A.

(NON STRESSED COMPONENT)

RADIOGRAPHIC TEST AS PER ASTM–E–192

ACCEPTENCE STANDARD:–
GAS HOLE & FOREIGN MATERIAL: LEVEL–5.
SHRINKAGE (ALL TYPES) – LEVEL 3

DIMENSIONS ARE IN mm.
UNTOLERATED DIMNS. AS PER IS : 2102 (MED)
SHARP CORNERS SHOULD BE BLUNT TO R 0.5

PART NO.	DESCRIPTIONS	NO OFF	MATERIAL	TREATMENT	REMARKS

	SIGNATURE & DATE.
TRACED	
DRAWN	S. Venkatesan
CHECKED	V.
HOS/D&DO	P. Tom
NODAL OFFICER FOR MSL.	
OFFICER/ D&DO	
APPROVED ON.20/01/2017	

AMENDMENTS	SIG. & DATE
DA. No. 03/18 Dt. 20/1/18	

SUB: INVESTMENT CASTING
FOR: PLATE INDEX
OF: 40mm MGL/38mm MSL
DES.REF.NO. TEND 2211*2
DRG. No.: TEND –2211*3

ORDNANCE FACTORY
TIRUCHIRAPPALLI–16.

SCALE 2:1
STORE DRG.NO.
OPERATION NO.
SHEETS: 1
SHEET. No.: 1

3 venkatesan