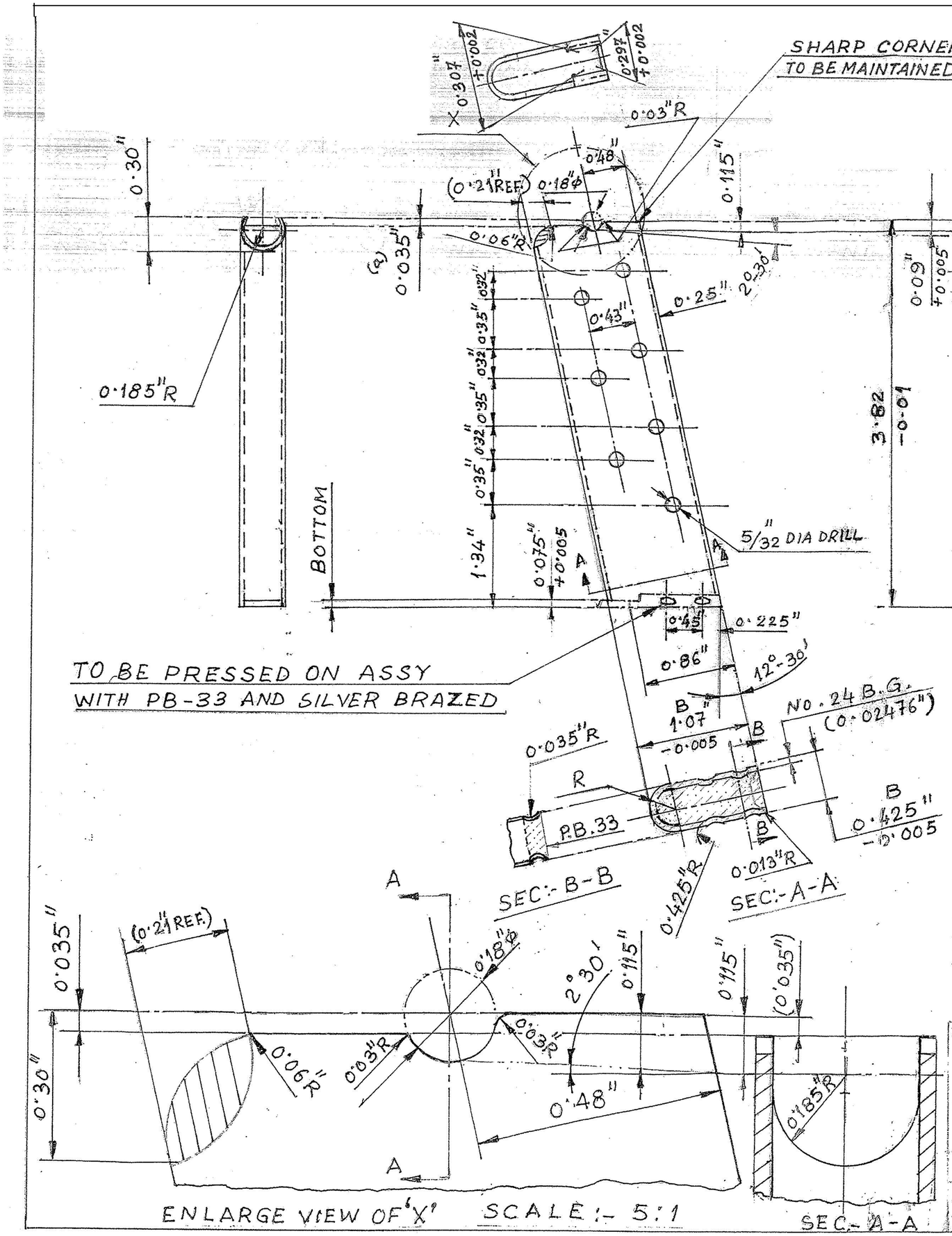

NOTE:-

FOR BOTTOM PORTION ANTI-RUST FINISH TO SPCN. WPN/GEN/3 CLASS II SPIRITSTAIN BLACK OIL FINISH AND REST PORTION:- ANTIRUST FINISH TO SPCN. WPN/GEN/3 CLASS-II OIL FINISH READ POLISHED AND BLUING.

DIMN. ARE TO BE READ AFTER PLATING (IF PLATING IS DONE)

MAT.:- BS. 1449 EN 2A OR 2B 1955 ⑥

TREAT.:- C.HRD. TO 300-350 V.P.N

~~PROTECTIVE FINISH:- POLISHED AND BUFING.~~

AFTER ASSY. WITH PB.33

'B' DENOTES FUNCTIONAL DIMNS.

1. FOR DEVELOPMENT LENGTH SEE T-9321 x4 EXPTL

2. MANDREL (INTERNAL) R.F.G.10998 EXPTL

ALTN. FINISH :- NICKEL PLATING (WITH COPPER UNDER COAT) TO SPECN BS: 1224-1970 FOLLOWED BY ELECTOPHORETIC LACQUERING WITH BLACKISH TINGE WITH SOLID CONTENT 9·9 TO 13% AND PH 5·2 TO 5·6 THICKNESS OF LACQUER- 5 TO 6 MICRON.

ITEM NO	NO OFF	MATERIAL	DESCRIPTION
1	1	AS ABOVE	CASE

LIST OF PARTS

DT & SIG.	DESCRIPTION	APPROVED BY.	
10.4.95	a) & b) added 0·312" dimn deleted	SCHEDULE NO.	
		SCALE: 1:1 (5:1)	PROJECTION THIRD ANGLE
20.11.96	ENLARGED VIEW ADDED	DRAWN BY. A. SARKAR	
		TRACED BY.	
19/12/01	⑥ year added DRG. NO ADD. To. M8208A	CHECKED BY.	
		APPROVED BY.	6-1-99
AMENDMENTS		DT.	SIG.

COMPT.:- CASE (MODIFIED) I.O.F. PISTOL 7·65mm (32)	STORE DRG. NO. P.B.31
CASE (MODIFIED)	
G.S.F. SKETCH No. M-8208A	
M/C	NO. OF SHEETS 1
G&SFY. COSSIPORE	SHEET NO. 1

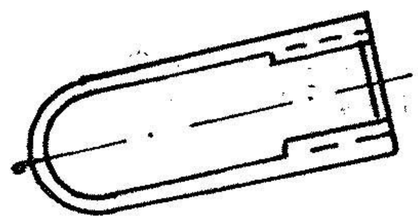

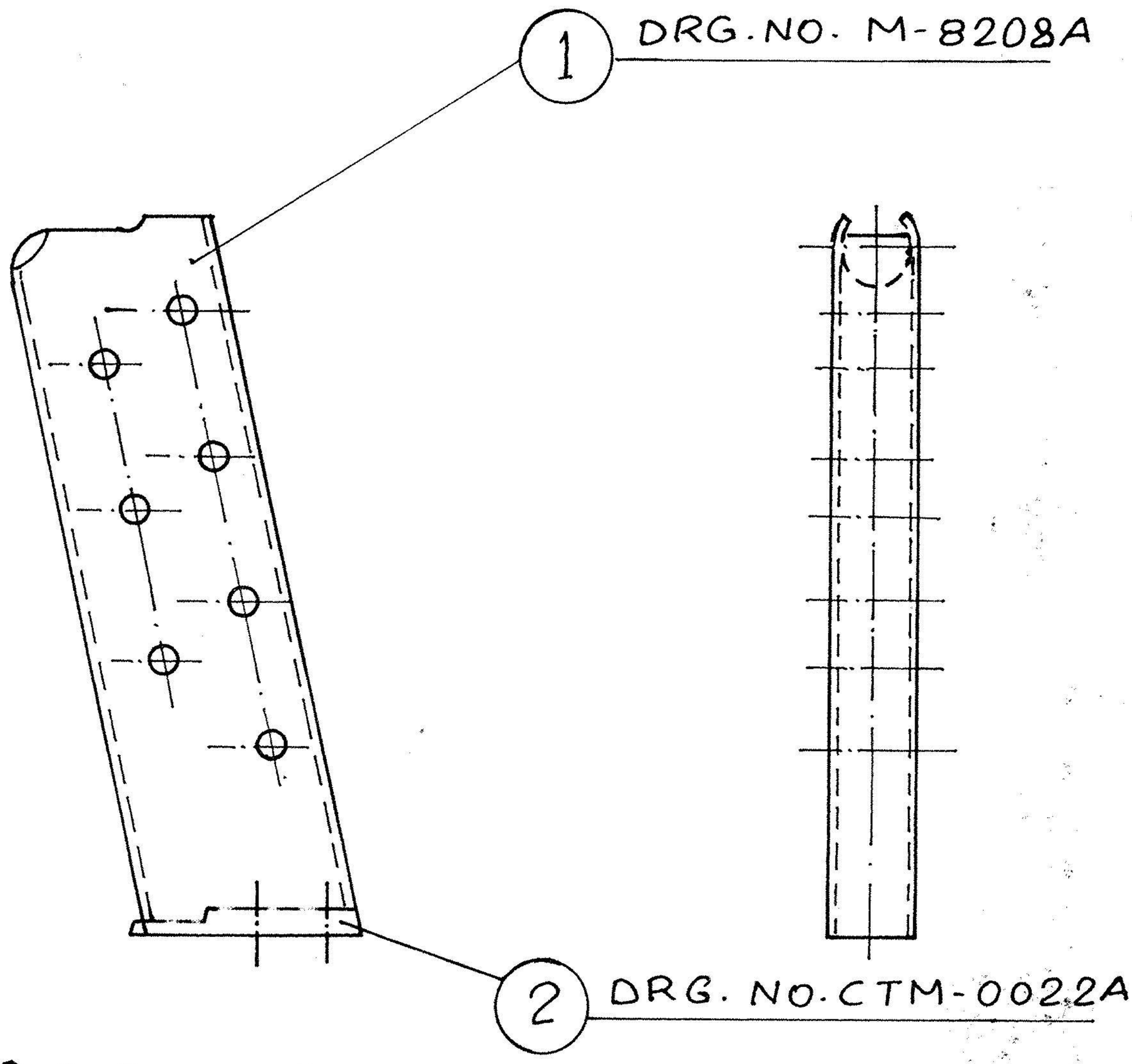

NOTE:- ① ITEM NO. 2 TO BE PRESSED IN ITEM NO. 1 FOR ASSEMBLY.

② ITEM NO. 1 & ITEM NO. 2 TO BE SILVER BRAZED ON ASSEMBLIED CONDITION.

③ FOR OTHER DETAIL SEE DRG. NO. M 8208A & CTM-0022A

ITEM NO.	NO. OFF	MATERIAL	DESCRIPTION
2	1	SEE DRG NO CTM-0022	PLATE BOTTOM
1	1	SEE DRG NO. M-8208	CASE

LIST OF PARTS

Schedule No.		Compt CASE & PLATE BOTTOM 7.65 mm (0.32") PISTOL	Store Drg. No. M-8208A CTM-0022A
Scale :- 1:1	Projection Third Angle		
Drawn By 17.1.97		CASE SUB ASSY.	
Traced By			
Checked By 18.1.97		DRG. NO. CTM-0099	
Approved By			
DT.&SG. / DESCRIPTION	APPROVED BY DGM ORD/MIG	M/C:-	NO. OF SHEETS 1
AMENDMENTS	DATE :- / SIGR.	G&S FY. COSSIPORE	SHEET NO. 1

SURFACE TREATMENT AMENDED BY AHSP VIDE APPROVAL LETTER No. 4082/S/PISTOL/CDO dt. 12-8-01

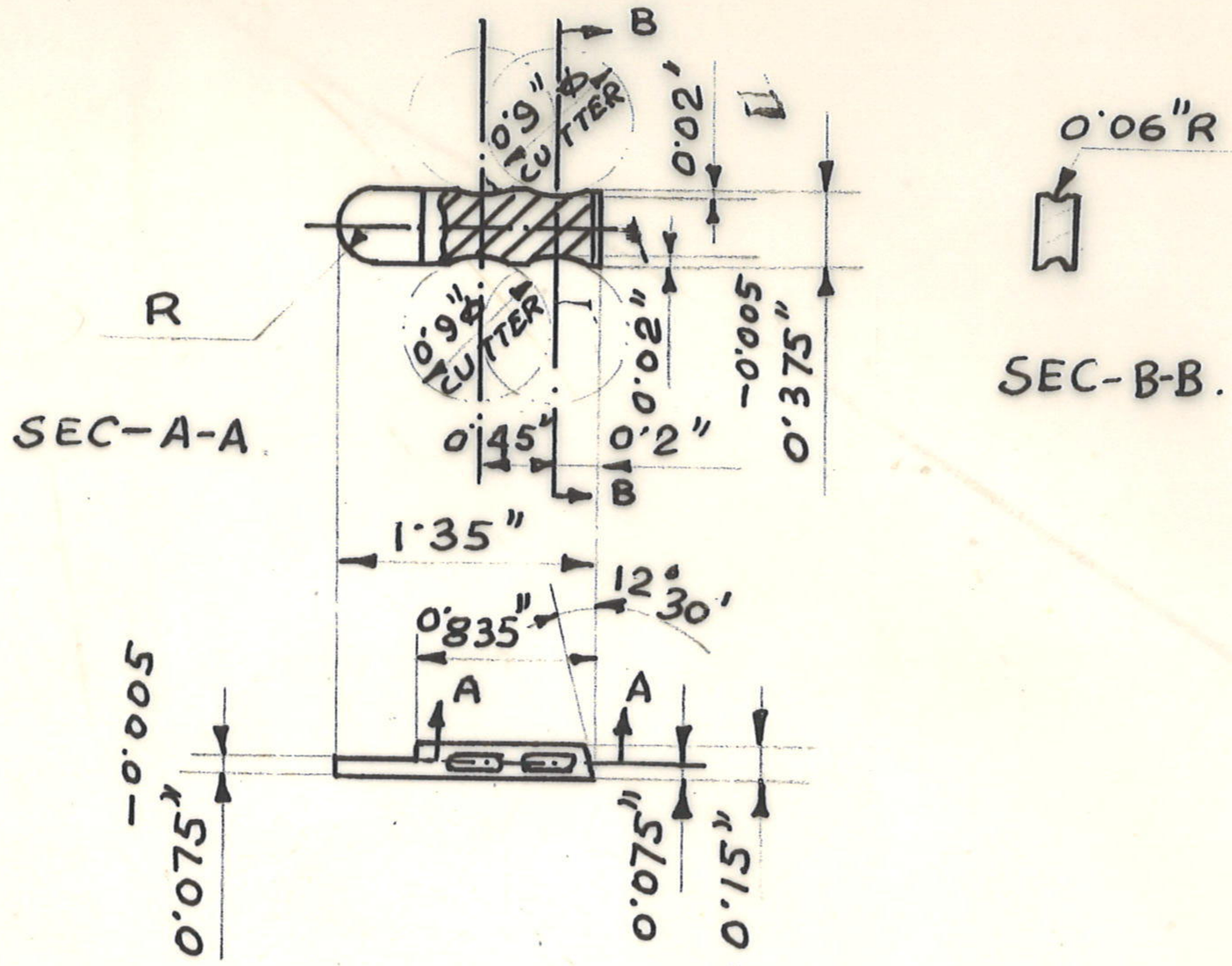

PROTECTIVE FINISH: POLESHED AND @ PHOSPHATING TO SPECN. (ASSY. WITH PB. 31) WPN/GEN/3 CLASS II

MATERIAL - BS: 1449 / En 2A OR 2B 1955 (b)

ITEM NO.	NO. OFF	MATERIAL	DESCRIPTION

20/12/01	(b) year added DRG NO - ADV - TO CTM-0022A	SCHEDULE NO.		LIST OF PARTS	
		SCALE: 1:1	PROJECTION THIRD ANGLE	COMPT: I.O.F. PISTOL 7.65 mm (0.32")	STORED DRG NO. PB. NO. 33
30/8/01	@ WAS BLUING	DRAWN BY - 17.3.93		PLATE BOTTOM	
		TRACED BY -			
		CHECKED BY - 22.3.93		SKETCH NO. CTM-0022A	
		APPROVED BY -			
DT & SG.	DESCRIP.	CONCURRED BY -		M/C	NO. OF SHT - 1
AMENDMENTS.		DT. -	SG. -	G & S. FY. COSSIPORE	SHT. NO. 1

PB - 33