A7

DRG No.	IC	SS	S	AA	A	C	SST
	2101	01	02	01	06	000	00DA

GENERAL TOL. : FINE / MEDIUM / COARSE
CLASS TO IS: 2102

DRG. CONVENTIONS CONFIRM TO INDIAN STANDARDS
DIMENSIONS ARE IN mm UNLESS OTHERWISE STATED.

NOTE:

1) ASSMEBLY TO BE CARRIED OUT AS PER ASSEMBLY PROCEDURE DOC. No. ARDE/9mm MP/ASSY/2022/01
2) MARKING ON COMPONENTS SUITABLY BY LASER ENGRAVING AS SHOWN IN THE DRAWING.
   SIZE OF LETTER - 2 mm MIN.
   DEPTH - 0.2 mm MIN.
   ⊗-MANUFACTURER'S MONOGRAM
   △-MANUFCTURING YEAR
   ⊠-BATCH NUMBER/ LOT NUMBER
   □-SERIAL NUMBER
   ○-VIEW/ACCEPTANCE MARK
   @ -PROOF MARK
   # - REGISTRATION NUMBER

CONTROLLED COPY 01

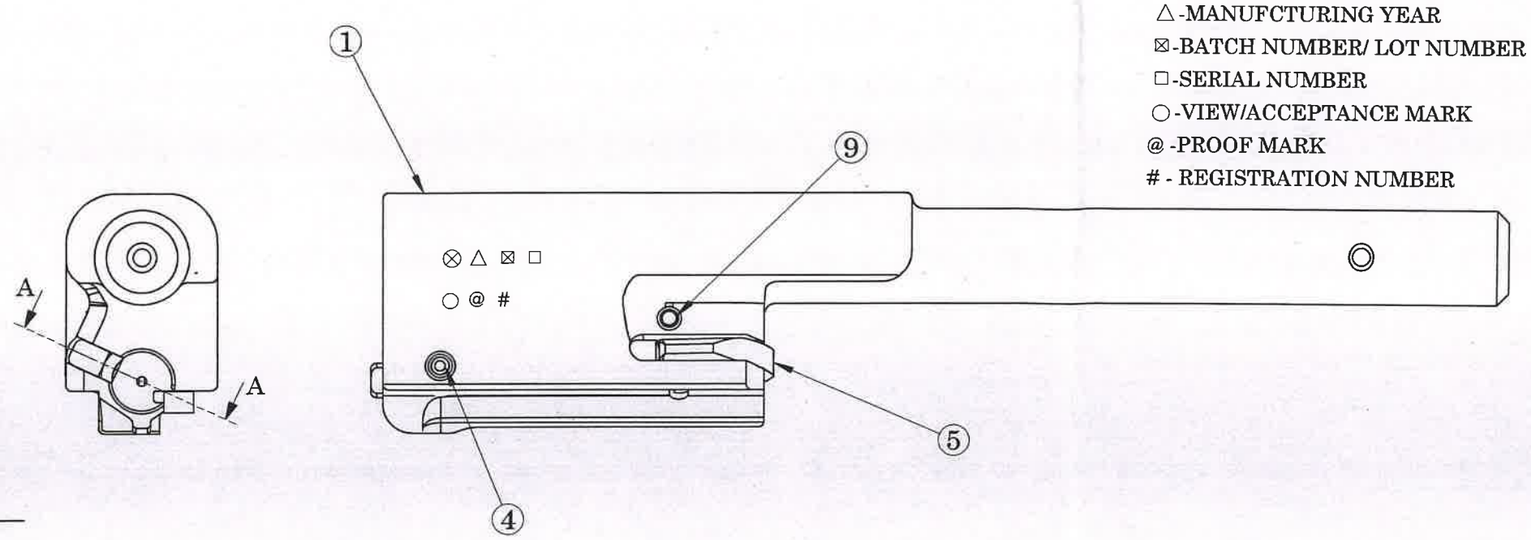

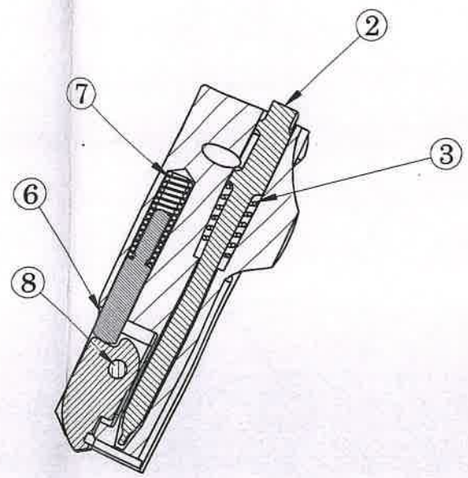

SECTION A-A

SR. No.	NOMENCLATURE	DRAWING NUMBER	QTY.
1	BOLT 9 mm	2101 01 02 01 06 001 00DA	1
2	PIN FIRING	2101 01 02 01 06 002 00DA	1
3	SPRING PIN FIRING	2101 01 02 01 06 003 00DA	1
4	PIN LOCKING PIN FIRING	2101 01 02 01 06 004 00DA	1
5	EXTRACTOR	2101 01 02 01 06 005 00DA	1
6	PLUNGER EXTRACTOR	2101 01 02 01 06 006 00DA	1
7	SPRING PLUNGER EXTRACTOR	2101 01 02 01 06 007 00DA	1
8	PIN EXTRACTOR	2101 01 02 01 06 008 00DA	1
9	PIN LOCKING PIN EXTRACTOR	2101 01 02 01 06 009 00DA	1

Sr. No.	DATE	AUTHORITY	BRIEF RECORD	ZONE	CD	GO
					SIGN	

DRN: AKASH
SIGN:
DATE: 24/08/2022
CHECKED

MATERIAL: -----

APPD.
DATE: 24/04/2022
FOR DIRECTOR

PROTECTIVE FINISH: ----

SEALED
DATE:

SHEET SIZE: A3
SCALE: 1:1

EST. MASS

TITLE:

BOLT ASSEMBLY

DESIGN AUTHORITY
ARDE
PUNE 411021

DRG No. 2101 (IC) 01 (SS) 02 (S) 01 (AA) 06 (A) 000 (C) 00DA (SST)

9mm	PART No.	DS CAT No.	AHSP