PART NO.
140-701-L1717 TEC

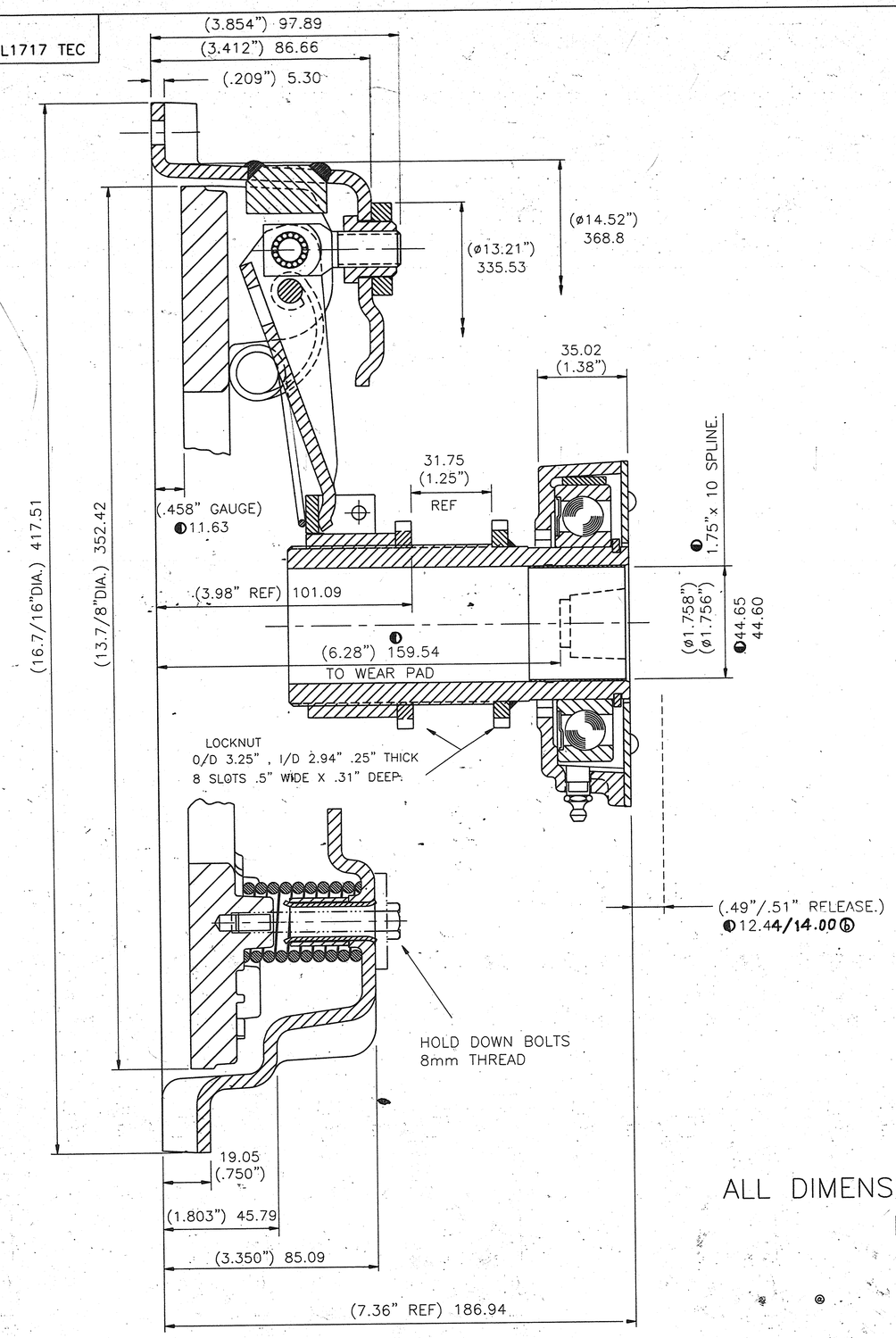

SECTION A-A.

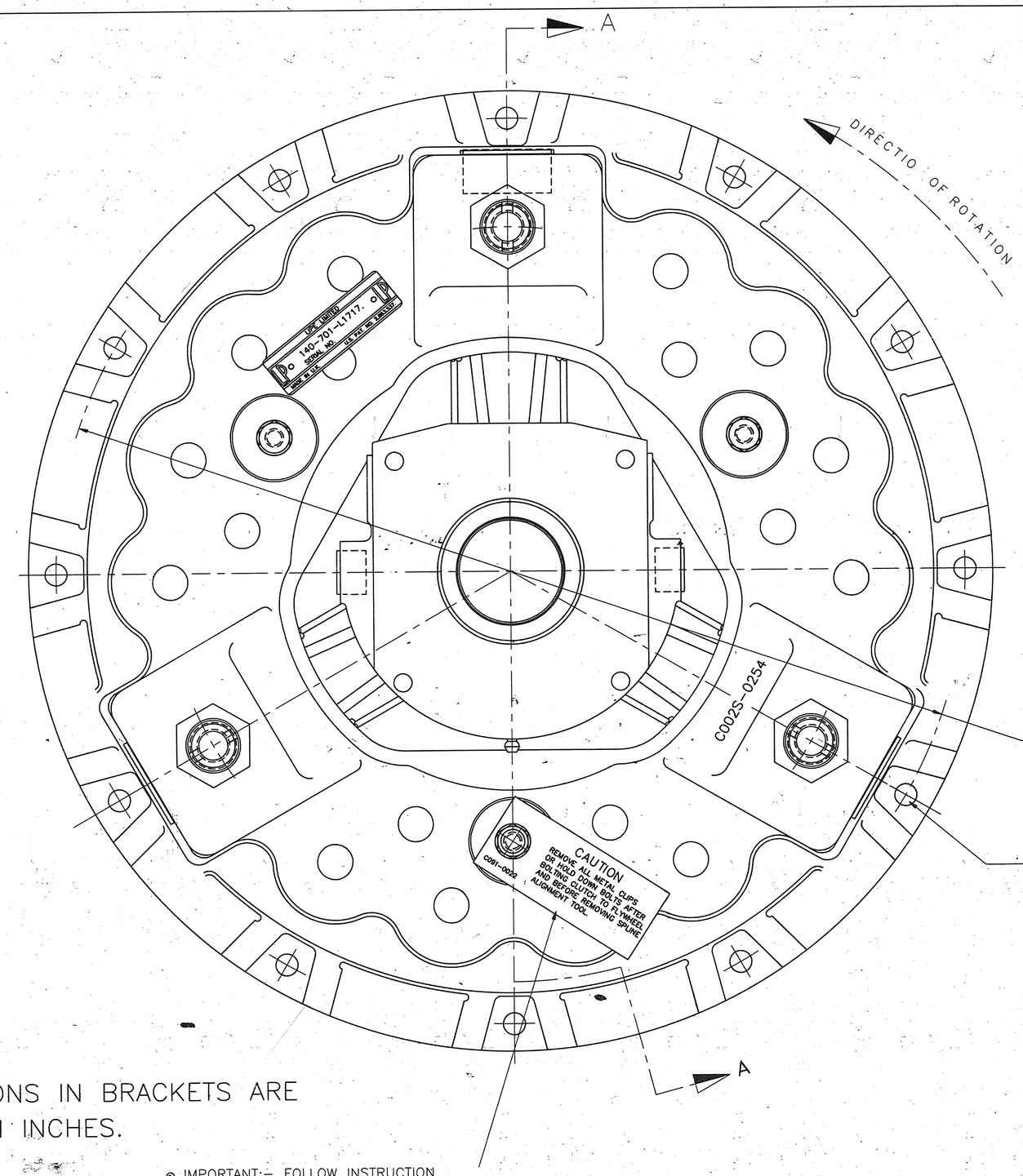

ALL DIMENSIONS IN BRACKETS ARE IN INCHES.

IMPORTANT:- FOLLOW INSTRUCTION AS DETAILED ON YELLOW TAG

THIS DRAWING AND THE INFORMATION IT CONTAINS ARE THE PROPERTY SOLELY OF LIPE CLUTCH DIVISION, HASLINGDEN, ENGLAND, WHICH SUPPLIES THEM ON A CONFIDENTIAL BASIS AND ONLY IN CONNECTION WITH ITS BUSINESS RELATIONSHIPS. REPRODUCTION OR DISCLOSURE BY ANYONE OF ANY PART OF THIS DRAWING OR INFORMATION THEREIN OR THE USE THEREOF FOR MAKING OTHER DRAWINGS OR FOR MAKING APPARATUS THEREFROM ARE PROHIBITED WITHOUT PRIOR WRITTEN CONSENT OF LIPE CLUTCH DIVISION.

DO NOT SCALE
TOLERANCES UNLESS OTHERWISE STATED:
FRACTIONAL ± .015(.38mm)
2 PLACES DEC. ± .010(.25mm)
3 PLACES DEC. ± .005(.12mm)
ANGULAR ±
DIMENSIONS IN: INCHES MM

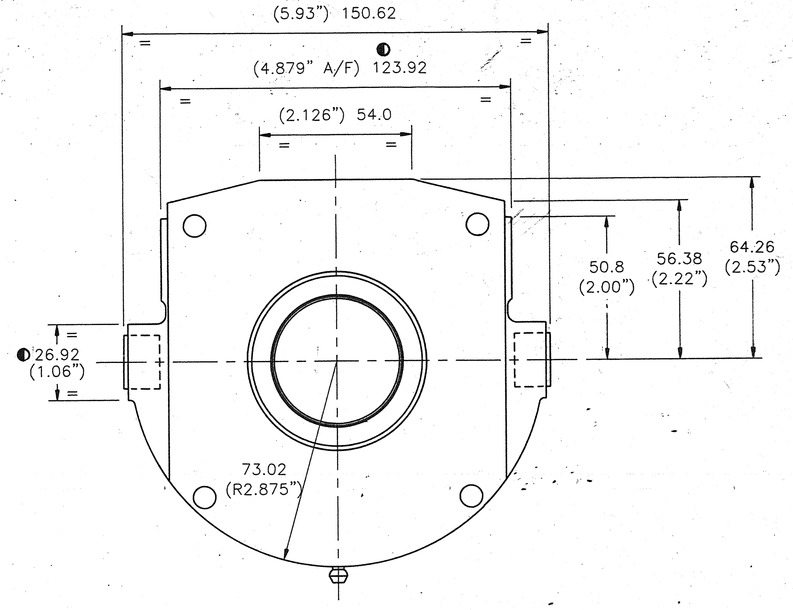

RELEASE BEARING PROFILE

.393.7±.076 B.C.D.
(15.500"±.003"B.C.D.)

9.55/9.60 DIA.
(.378"/.376"DIA.)
12 HOLES EQUALLY SPACED AS SHOWN.

24/5/00	95PM557 ADD-008	b	–	C OF C SYMBOLS ADDED. DIMN FOR RELEASE TRAVEL 12-44 TO 14-00 WAS 12-44 TO 12-95	B/ PMM.
2-4-10-00	94PM392 ADD-016	a	–	DRG UPDATED AS PER PARTS MOD FROM 'C' TO 'E'. NOTE "12HOLE TO BE APPROVED" DELETED. MIN LIFT 1.52 ADDED.	B/ PMM
11-3-2000	95PM551 ADD-006	–	–	NEW RELEASE	JNE JMEJ
Date	Mod. No.	S.No.	Zone	Modification	D.O.

TEST PROCEDURE FOR 14" DIA COVER ASSEMBLY

TEST	REQUIREMENT
PRESSURE SPRINGS	
BY SPRING VENDOR:- IN LINE TEST, COMPRESSING SPRING FROM WORKING HEIGHT TO MIN WORKING HEIGHT FOR 3.6 MILLION CYCLES.	LOAD LOSS TO BE LESS THAN 5% OF THE ORIGINAL LOAD. NO TIP OR COIL BREAKAGE.
IN HOUSE TEST:- SET SPRINGS IN COVER ASSEMBLY, ACTUATE CLUTCH FOR 3.6 MILLION CYCLES	LOAD LOSS TO BE LESS THAN 5% OF THE ORIGINAL LOAD. NO TIP OR COIL BREAKAGE. ASSEMBLY TO RETAIN SUFFICIENT PRESSURE PLATE LIFT TO DISENGAGE DISC AFTER 3.6 MILLION CYCLES
TELCO TEST:- TEST AT 150°C FOR 10 000 CYCLES.	SLIP LOAD CALCULATED FROM CLAMP LOAD SHOULD BE AT LEAST 1.6 TIMES MAXIMUM ENGINE TORQUE.
COVER ASSEMBLY U.K. CONTROLLED FIELD TEST.	
12 MONTHS CONSTANT DAILY USAGE OR 100,000 KILOMETRES.(MINIMUM)	NO VISUAL OR MECHANICAL DEFECTS SHOULD BE EVIDENT.
COVER ASSEMBLY AMBIENT BURST.	
SPIN UNTIL COVER ASSEMBLY BURSTS	MINIMUM REQUIREMENT 2.1/2 TIMES THE MAXIMUM ENGINE SPEED.
COVER ASSEMBLY BALANCE.	
ALL COVER ASSEMBLIES.	BALANCE ASSEMBLY TO WITHIN 1 OZ INCHES AT 900 RPM
COVER ASSEMBLY INERTIA.	1391 LBS IN SQ. .407 KGM SQ.
COVER ASSEMBLY WEIGHT.	42 LBS 19.05 KGS

TELCO PART NO.2752 2540 01 05

MAX PRESSURE PLATE LIFT (.065") 1.6
MINIMUM LIFT = 1.52

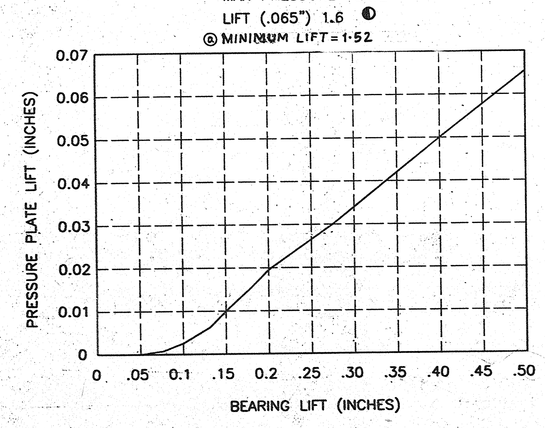

BEARING LIFT VS PRESSURE PLATE LIFT

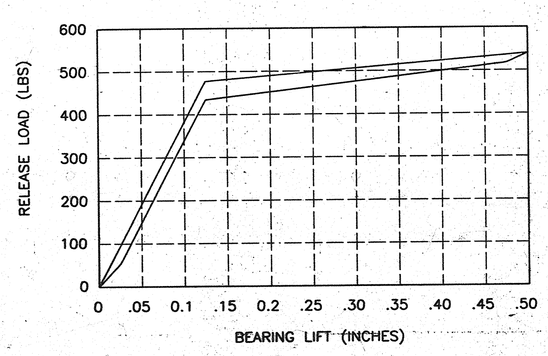

MAX RELEASE LOAD
551 LBS
250 KG

BEARING LIFT VS RELEASE LOAD

NOTE: CLUTCH TORQUE CALCULATIONS ARE BASED ON THE AVERAGE CLAMP LOAD IN THE NEW CONDITION ie 3015 LBS.

MAX CLAMP LOAD WORN 2964
MIN CLAMP LOAD WORN 2750

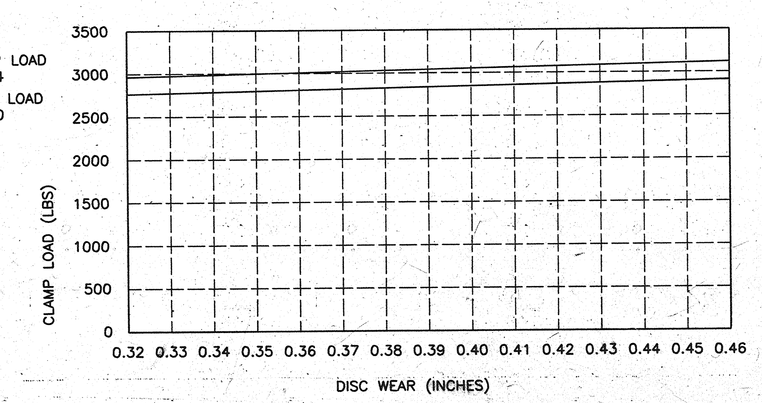

MAX CLAMP LOAD NEW 3120
MIN CLAMP LOAD NEW 2910

CLUTCH DISC THICKNESS VS. CLAMP LOAD

Classification of characteristics:
Critical ▲ Key Instructions
Major (Heavy)
Applies to upper limit
Applies to lower limit
Minor

NO.	DATE	MODIFICATION
A.		REVISED DISCUSSION DRAWING 8.12.99 CRS
B.		REVISED DISCUSSION DRAWING, mm SIZES ADDED. CRS 11.2.00
C		REVISED DISCUSSION DRAWING, TOLERANCE ADDED. CRS 2.3.00
D.		INERTIA/WEIGHT FIGURES CORRECTED CRS 2.5.00.
E		HOLD DOWN BOLTS OPTIONAL 12 NOTES ADDED. REF REMOVED FROM 159mm DIMENSION DATE: 03/07/00

SETCO
GUJARAT SETCO CLUTCH LTD.
BARODA GODHRA HIGHWAY.
KALOL, DIST. PANCHMAHAL.
PART NO: 140-701-L1717 TEC

DT. 20-8-00

C.A.D.

DESCRIPTION:
AUTOMOTIVE CLUTCH COVER ASSEMBLY. 14 1LP 1.75"-10

LIPE™
HASLINGDEN, LANCASHIRE ENGLAND
TELEPHONE:0706 228321
FAX:0706 229585

DRAWN:	DATE:	CHECKED:	DATE:	PART NO:
C.SALMON	8.12.99			140-701-L1717 TEC
SCALE: FULL SCALE.	NO. OF SHEETS: 1	SHEET NO. 1	SIZE A0	