DRAWING NUMBER **Cb.3301-85-4A** | SHEET No. 1 OF 1

2.5/(√)

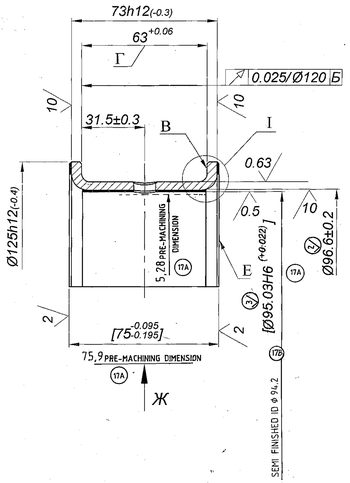

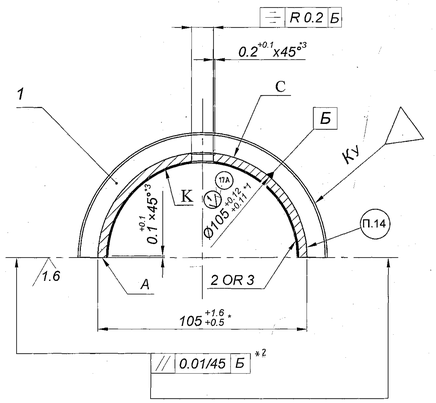

13. Match the upper thrust shell with lower thrust shell СБ3301-86-4A as per height 'Д'. Total sum of height of pairing shell should be in the limits of 105,110.... 105,142mm. Parallel dirt of surface Joint'A' of pairing shell from the axis of surface 'C' should not exceed 0.05mm.
14. Mark СБ3301-86-4A and СБ3301-85-4A with same serial number for pairs and use together.
15. * Dimension in free condition-for reference
16. *1 Dimension to be ensured by Tool.
17. *2 Measure with the help of fixture in compressed state.
18. *3 It is permited to apply dimension as per gauge.
19. Runout of surfaces 'B' to be ensured before cutting.
20. It is allowed to mark the pairing number and slitting engrave final inspection stamp by electricerrosion method.
21. It is allowed to carryout the measurement of cylindricity of external surface after final machining, without removing the mandrel.

17A

	R1	R2	REMARKS
OUT SIDE DIA (1)	105 +0.12 +0.09	106 +0.12 +0.09	1. FINISH SURFACE 'E' & 'K' IN THE CRANKCASE ASSY. BORE INSERTS 3301-85-4A R1 & R2 OVER SURFACE 'K' TO DIMENSIONS OF 94 +0.022 +0.011 TO 95 +0.022 +0.011 mm. BORE INSERTS OVER SURFACE 'E' TO DIMENSIONS OF 75 -0.095 -0.195 TO 76 -0.095 -0.195 mm.
INSIDE DIA (2)	96,6 ±0.2	96,6 ±0.2	2. OTHER SIZES, ROUGHNESS OF SURFACES, TECHNICAL REQUIREMENTS AND MATERIAL ARE ACCORDING TO THE DRAWING Cb.3301-85-4A.
DIA. BEFORE LEAD PLATING (3)	93,5 +0.07	93,5 +0.07	3. REPAIR SIZE CATEGORY R1 (OR) R2 TO BE MARKED BY AN ELECTRO GRAPH.

NOTE: 'R2' SIZE IS 'APPLICABLE ONLY' FOR V46-6 ENGINE.

1. Requirements for Material and the quality of casting should be as per instruction TTM 43-87.
2. Coating to be done with 01 or 3 microns thick zinc, 1micron chromium as per ИЛ 749-88 after pairing shells which are to be sent as spare parts.
3. Surface K should be coated with lead thickness (0.015±0.005) mm as per(instructions) ИЛ 702-87. Bubbles, leakages, strips and non coating with Lead layer are not allowed. On all dimensioning surfaces except A, B, C and E lead coating is allowed. Lead coating to be done after machining in the crankcase assembly.
4. The alternative coating of surface K- Alloy 88-96% Pb and 12-4% Sn.
5. Allowance for cylindricity of external surface should be 0.01mm before cutting.
6. The difference in thickness must not be more than 0.1mm before casting.
7. The difference in total thickness (steel+ bronze) before final machining of surface K should not be more than 0.1mm.
8. Carryout the machining as per Dimension in square brackets along with the assembly units of crank case.
9. It is permited to have the presence of denis with Diameter not more than 1.6 mm on the surface ' C ' , with Depth not more than 0.2 mm with Quantity not more than 3 numbers.
10. Check the surface "C" by bluing when compressed shells. The imprint should be covered minimum 80% of the surface of the shell.
11. Dimension ' Г ' to be maintained before cutting. It is permited to change the dimension " Г " up to 62.94mm in free condition.
12. Dimension "Д " before coating to be checked in measuring fixture as per diagram.

DIAGRAM FOR MEASURING HEIGHT

F=(32370±980)H [(3300±100)Kg]

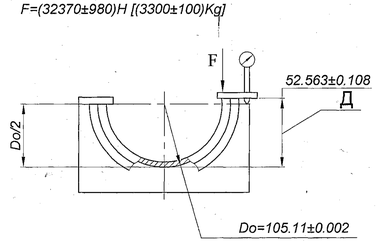

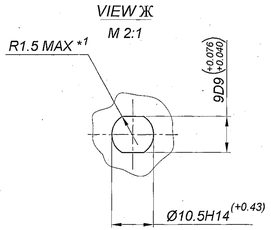

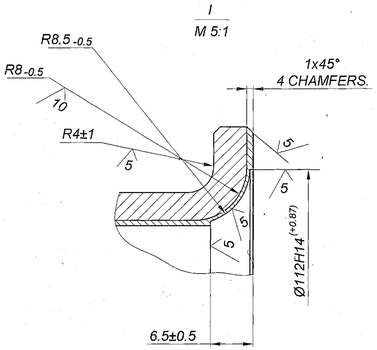

PILOT SAMPLE SHOULD BE APPROVED BY A H S P BEFORE BULK PRODUCTION.

EST. WT. (kg)	TO BE STAMPED OR MARKED WHERE INDICATED THUS # (LETTERS)
0.670	

ALL SHARP EDGES AND CORNERS TO BE REMOVED UNLESS OTHERWISE STATED MACHINED CORNERS TO HAVE R OUT-SIDE R INSIDE EQUIVALENT CHAMFERS ARE PERMISSIBLE.

ISSUE	DATE	NATURE OF AMENDMENTS
17B	20.8.10	4th Alt. Comm Meeting Minutes Point. No:20 Dt. 26.10.09 Authy:-DEFA L1 No. EFA/P/RDS/028
17A	12-06-09	Dt:25-03-09 &(ii) 82847/OH/QAS/ED Dt:20-03-93 BEFA/P/PDO/923 Dt.4.11.98

DRN	
CHD	
APPD	
DATE	05-9-07
SCALE-	1:1
DIMENSIONS IN mm	
TOLERANCE ON DIMNS UNLESS OTHERWISE STATED IS: 2102-69	
ALL THREADS TO CONFORM TO	

MATERIAL:- —— | USED ON:- Cb 3301-15-30, Cb 3301-15-44

CONTROLLERATE OF QUALITY ASSURANCE (HEAVY VEHICLES) AVADI

TITLE:- **UPPER THRUST INSERT ASSY**

D S CAT NUMBER | DRAWING NUMBER **Cb.3301-85-4A**

COMMON TO V46-6

DRG. INDIANISED BASED ON RUSSIAN ORIGINAL ISSUE-17

F-3 14 186

SIZE A2x3

DRAWING NUMBER
Cb.3301-86-4A

SHEET No. 1 OF 1

2.5

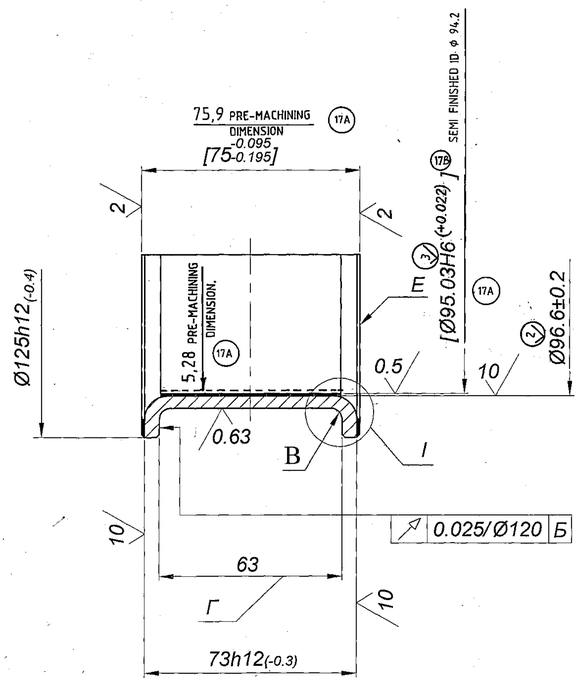

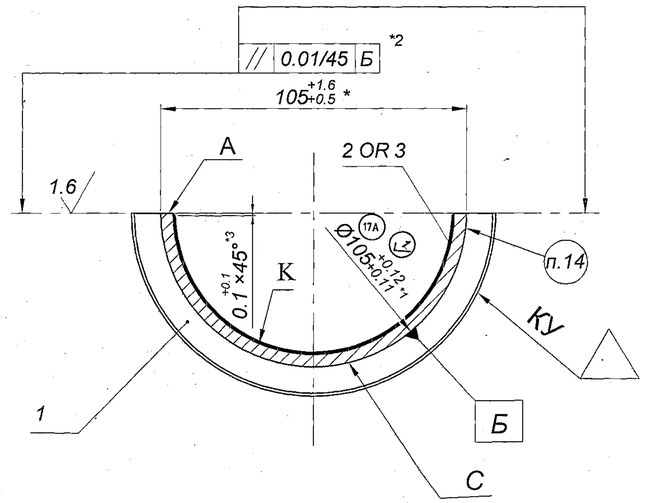

I
M 5:1

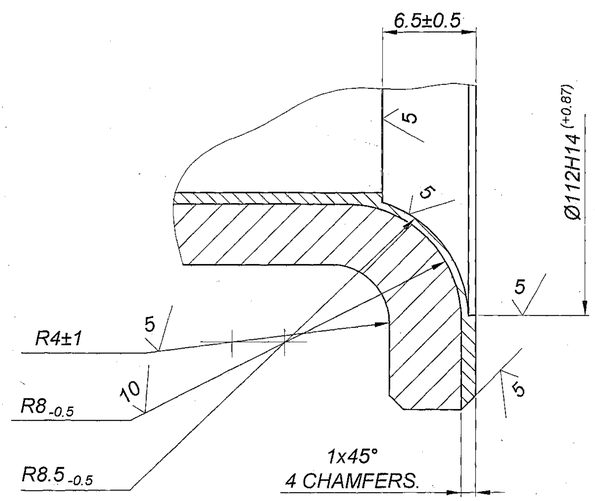

DIAGRAM FOR MEASURING HEIGHT

F=(32370±980)H [(3300±100)Kg]

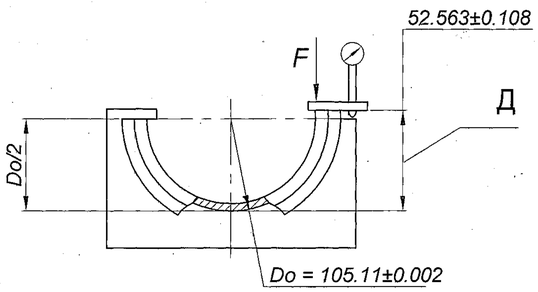

13. Match the Lower thrust shell with upper thrust shell СБ3301-85-4А as per height 'Д'. Total sum of height of pairing shell should be in the limits of 105,110.... 105,142mm. Parallel dirt of surface Joint'A' of pairing shell from the axis of surface 'C' should not exceed 0.05mm.
14. Mark СБ3301-86-4А and СБ3301-85-4А with same serial number for pairs and use together.
15. * Dimension in free condition-for reference.
16. *1 Dimension to be ensured by Tool.
17. *2 Measure with the help of fixture in compressed state.
18. *3 It is permited to apply dimension as per gauge.
19. Runout of surfaces 'B' to be ensured before cutting.
20. It is allowed to mark the pairing number and slitting engrave final inspection stamp by electricerrosion method.
21. It is allowed to carryout the measurement of cylindricity of external surface after final machining, without removing the Mandrel.

1. Requirements for Material and the quality of casting should be as per instruction ТТМ 43-87.
2. Coating to be done with 01 or 3 microns thick zinc, 1micron chromium as per ИЛ 749-88 after pairing shells which are to be sent as spare parts.
3. Surface K should be coated with lead thickness (0.015±0.005) mm as per(instructions) ИЛ 702-87. Bubbles, leakages, strips and non coating with Lead layer are not allowed. On all dimensioning surfaces except A,B,C and E lead coating is allowed. Lead coating to be done after machining in the crankcase assembly.
4. The alternative coating of surface K- Alloy 88-96 % Pb and 12-4% Sn.
5. Allowance for cylindricity of external surface should be 0.01mm before cutting.
6. The difference in thickness must not be more than 0.1mm before casting.
7. The difference in total thickness (steel+ bronze) before final machining of surface K should not be more than 0.1mm.
8. Carryout the machining as per Dimenssion in square brackets along with the assembly units of crank case.
9. It is permited to have the presence of dents with Diameter not more than 1.6 mm on the surface ' C ' , with Depth not more than 0.2 mm with Quantity not more than 3 numbers.
10. Check the surface "C" by bluing when compressed shells. The imprint should be covered minimum 80 % of the surface of the shell.
11. Dimension ' Г ' to be maintained before cutting. It is permited to change the dimension " Г " up to 62.94mm in free condition.
12. Dimenssion "Д " before coating to be checked in measuring fixture as per diagram.

17A

OUT SIDE DIA	R1	R2	REMARKS
	105 +0.12 +0.11	106 +0.12 +0.11	1. FINISH SURFACE 'E' & 'K' IN THE CRANKCASE ASSY. BORE INSERTS 3301-85-4A R1 & R2 OVER SURFACE 'K' TO DIMENSIONS OF 94 +0.022 TO 95 +0.022 mm. BORE INSERTS OVER SURFACE 'E' TO DIMENSIONS OF 75 -0.095 -0.195 TO 76 -0.095 -0.195 mm.
INSIDE DIA	96,6 ±0,2	96,6 ±0,2	2. OTHER SIZES, ROUGHNESS OF SURFACES, TECHNICAL REQUIREMENTS AND MATERIAL ARE ACCORDING TO THE DRAWING Cb.3301-86-4A.
DIA. BEFORE LEAD PLATING	93,5 +0,07	93,5 +0,07	3. REPAIR SIZE CATEGORY R1 (OR) R2 TO BE MARKED BY AN ELECTRO GRAPH.

NOTE: 'R2' SIZE IS 'APPLICABLE ONLY' FOR V46-6 ENGINE.

DRG. INDIANISED BASED ON RUSSIAN ORIGINAL ISSUE - 17

COMMON TO V 46-6

PILOT SAMPLE SHOULD BE APPROVED BY A H S P BEFORE BULK PRODUCTION.

EST. WT.	TO BE STAMPED OR MARKED WHERE INDICATED THUS # (LETTERS)
0.674	

ALL SHARP EDGES AND CORNERS TO BE REMOVED UNLESS OTHERWISE STATED MACHINED CORNERS TO HAVE R OUT-SIDE R INSIDE EQUIVALENT CHAMFERS ARE PERMISSIBLE.

ISSUE	DATE	NATURE OF AMENDMENTS
17B	20.8.10	4th Alt. Comm. Meeting Minutes Point No. 20 Dt. 26.10.09
17A	12-06-09	Authy:- i) EFA Lt.No.EFA/P/RDS/028 Dt: 25-05-09 & (ii) 82847/OH/QAS/ED Dt: 20-03-95. iii) EFA/P/PDO/023 Dt: 6.11.98

DRN	
CHD	
APPD	
DATE	05.9.07
SCALE:- 1:1	
DIMENSIONS IN mm	
TOLERANCE ON DIMNS UNLESS OTHERWISE STATED IS: 2102-69	
ALL THREADS TO CONFORM TO	

MATERIAL :-

USED ON :- Cb3301-15-30
Cb 3301-15-44

CONTROLLERATE OF QUALITY ASSURANCE (HEAVY VEHICLES) AVADI

TITLE :- **LOWER THRUST INSERT ASSY.**

D S CAT NUMBER

DRAWING NUMBER **Cb.3301-86-4A**

F-3
16
166

SIZE A1

iii) EFA/P/PDO/023 dt 6.11.98

Format Формат	Zone Зона	Поз. Item	Code Обозначение	Nomenclature Наименование	Qty. Кол.	Remarks Примечание
				Documentation		
				Документация		
				Assembly drawing		
*)			сб.3301-85-4АСБ	Сборочный чертеж		*) А3х3
				Parts		
				Детали		
				Upper thrust bearing shell		
БЧ		1	3301-85-4А	Вкладыш упорный		
				верхний		
			Steel 10 GOST 1050-88	Сталь 10 ГОСТ 1050-88	1	
				Materials		
				Материалы		It is permitted to replace 0.064 kg by item 3.
		2	Bronze	Бр ОС 1-22		0,064кг.
			OST	ОСТ 190054-72		допускается замена на поз.3
		3	Bronze	Бр С 30		0,064кг.
			GOST	ГОСТ 493-79	It is permitted to replace 0.064 kg by item 2	допускается замена на поз.2
			Note : Б.Ч. = without drawing			

Изм	Лист	№ докум	Подп	Дата
	Нов	89-419		

сб.3301-85-4А

Trans. & Ckd. by : M/s SWYAZ

Authenticated by :

Approved by :

Engine Factory, Avadi

UPPER THRUST BEARING SHELL

Вкладыш упорный верхний

Letter Лит	Sheet Лист	Sheets Листов
А		1

F 3/13 F 3/13

Формат А4

Подп. и дата | Инв. № дубл. | Взам. инв. № | Подп. и дата | Инв. № подл. 44209

Format Формат	Zone Зона	Поз. Item	Code Обозначение	Nomenclature Наименование	Qty. Кол.	Remarks Примечание
				Documentation		
				Документация		
				Assembly drawing		
*)			сб.3301-86-4АСБ	Сборочный чертеж		*) А3х3
				Parts		
				Детали		
				Lower thrust bearing shell		
Б4		1	3301-86-4А	Вкладыш упорный		
				нижний		
			Steel 10 GOST 1050-88	Сталь 10 ГОСТ 1050-88	1	
				Materials		
				Материалы		It is permitted to replace 0.064 kg by item 3.
		2	Bronze	Бр ОС 1-22		0,064кг.
				ОСТ 190054-72		допускзамена
						на поз.3
		3	Bronze	Бр С 30		0,064кг.
				ГОСТ 493-79	It is permitted to replace 0.064 kg by item 2.	допускзамена
						на поз.2
			Note : Б.Ч. = without drawing			

Подп. и дата | Инв. № дубл. | Взам. инв. №

Изм.	Лист	№ докум.	Подп.	Дата
	Нов.	89-419		

Подп. и дата

Инв. № подл. 44262

Trans. & Ckd. by : M/s SWYAZ

Authenticated by :

Approved by :

Engine Factory, Avadi

сб.3301-86-4А

LOWER THRUST BEARING SHELL

Вкладыш упорный нижний

Letter Лит.	Sheet Лист	Sheets Листов
A		1

F 3/15 F-3/15

Формат А4