DRG. NO: FS-2635B

AMENDMENTS			
REV	DATE	DESCRIPTION	SIGN
A 475/06	90.X.06	Dim. 17.2 Shown Correctly. Dt-6/7/11	30/10/06 JGM/FS
B 250/2011	19.11.11	DC 37284 A WAS DC 36685 A Dt 05/07 2000 - DRG. ADV. 'B'	HOS/CDD

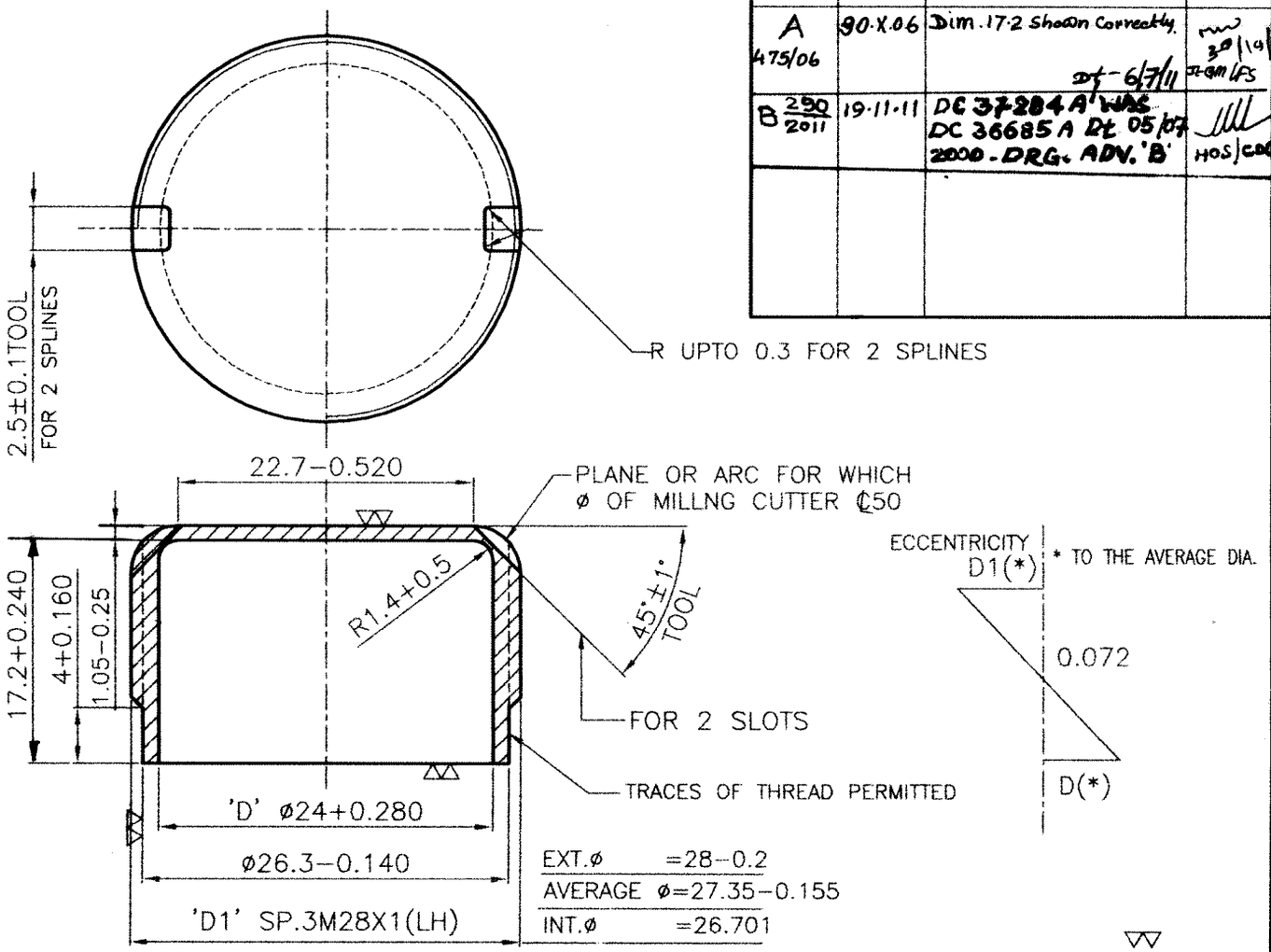

EXT.ø =28−0.2
AVERAGE ø=27.35−0.155
INT.ø =26.701

NOTE:−

1)COMPONENT TO BE MANUFACTURED BY DRAW PROCESS.

2)ON THE INTERNAL SURFACES OF THE PART SLIGHT SCRATCHES FROM THE PUNCH ARE PERMITTED.

3)THE BOTTOM MAY BE CUT FROM INSIDE TO ACHIEVE THE DIMENSION 17.2+0.240

4)4, SPANNER SLOTS CAN BE MADE.

5)A CHAMFER OF 0.3X30° OR RADIUS UPTO 0.3 IS PERMITTED ON THE FACE OF THE CYLINDRICAL PART OF THE DETAIL ø26.3−0.140

6)SOAKING TO BE DONE WITH OIL VARNISH NO.92−A TY MXn 694−41

7)SCREWING IN OF THREAD GAUGE "NO GO" UPTO 3 ½ ROTATIONS IS ALLOWED.

PROTECTIVE TREATMENT:−COMPONENTS WILL BE PHOSPHATED TO SPECN. JSS−0465−01−1994 REV.NO.1 CLASS II STAINED BLACK AS PER PARA 13(F) FOLLOWED BY COATING OF AMMUNITION PROTECTIVE COMPOSITION NO. 12 TO SPECN.NO. JSS 1−65−10.

MATERIAL: − BS: 1449 SECTION 1.1: 1991 Gr.-CR2 OR CR3 OR IS: 513-2008, Gr.-CR3 OR CR4

DIMENSIONS ARE IN mm			MATERIAL AS ABOVE	ORDNANCE FACTORY AMBAJHARI
THIRD ANGLE PROJECTION				
SCALE − 1:1			NOMENCLATURE	
2006	NAME	DATE	MAGAZINE (DC-37284-A Dt.06-07-11)	DRAWING NO. FS − 2635 B
DRAWN	Sukhwa	12.3.06		
TRACED				SHEET NO.− 1
CHECKED	[illegible]	12.3.06		NO.OF SHEETS − 1
JWM/CDD				OPERATION −
APPVD WM/QC	[illegible]	[illegible]	STORE FUZE B429 & B429E	COMPT.

FGROUP\misc\MAGAZINE162FS