MECH. PROPERTY & CHEM.COMPOSITION

GRADE	C	Si	Mn	Cr	Ni Max.	S Max.	P Max.	Cu Max.	Mo	YIELD STRENGTH Kgf/mm2 Min	ULTIMATE TENSILE STRENGTH Kgf/mm2 Min	PERCENTAGE ELONGATION% Min	REDUCTION OF AREA % Min	IMPACT STRENGTH Kg.m/Cm2 Min	HARDNESS BHN Max
30XH3A GOST 4543-71	0.27-0.33	0.17-0.37	0.30-0.60	0.60-0.90	2.75-3.15	0.025	0.025	0.3	-	80	100	10	50	8	285-341
EN 25 BS:970	0.27-0.35	0.10-0.35	0.50-0.70	0.50-0.80	2.30-2.80	0.025	0.025	-	0.40-0.70	52 ton/sq in,Min	65 ton/sq inMin	14	-	IZOD VALUE 35 ft.lb Min	293-341

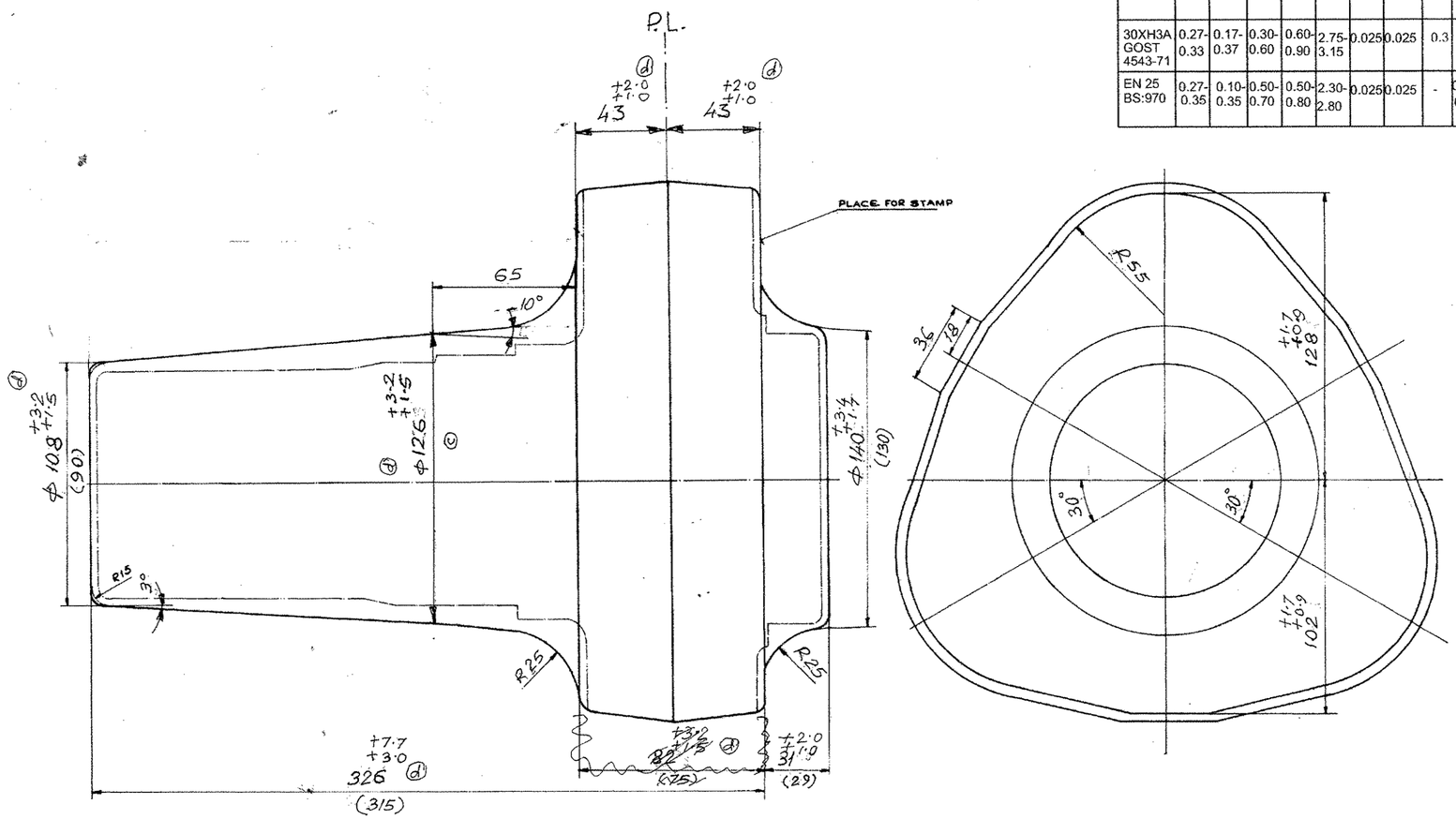

VETTED 05 JUL 2005 JWM/OS

AF/RC

VETTED 26 OCT 2007 JWM/STD-CELL

VETTED JWM/STD-CELL

1. CLEAN THE PART FROM SCALES IN CORRESPONDENCE WITH APPROVED STANDARD.
2. PART IS HEAT TREATED
3. STAMP MELT CONVENTIONAL NO WITH A DEPTH OR HEIGHT 0.5 TO 1.5 mm TO THE SURFACE.

THE FOLLOWING ARE PERMITTED

4. SURACE DEFECTS ON MACHINED SURACES UP TO 0.5 OF ACTUAL MACHINING ALLOWANCE, ON UNMACHINED SURACES UP TO 2.0 mm.
5. SKEWNESS (AXIAL SHEARING) OF DIES UP TO 30 mm.
6. BURRS ALONG THE PARTING LINE OF DIES UP TO 3 mm.
7. UNDER FILLING ALONG ϕ110 IS AN INDICATED BY CONVENTIONAL DOTTED LINES

NOTE

1. DRAFTS IS UP TO 7°
2. UNSPECIFIED RADII ARE 4mm.
3. DIMENSIONS GIVEN IN BRACKETS ARE FOR MACHINING.
4. DIMENSIONS WITHOUT TOLERANCES ARE NOT SUBJECTED TO CHECKING.
5. FORGING SHOULD BE SUPPLIED IN HEAT-TREATED CONDITION. HARDNESS - HB 341-285 (ϕ3.3 - 3.6)

@ ALT.MATL:EN 25 BS:970 WITH P&S 0.025Max EACH.

30XH3A-GOST-4543-71 | 55.2 Kg

संख्या NO.OFF	विवरण DESCRIPTION	पुर्जा क्र. PART NO.	पदार्थ MATERIAL	मानक STANDARD	परिमाप DIMENSIONS	अभ्यक्ति REMARKS WEIGHT

सामान्य सहिष्णुता GENERAL TOLERANCE	
रेखिक परिमाप LINEAR DIMENSION	
0-6	±0.1
6-30	±0.2
30-120	±0.3
120-315	±0.5
315-1000	±0.8
1000-2000	±1.2
कोणिक परिमाप ANGULAR DIMENSION	
1-10	±1°
10-50	±30'
50-100	±20'
>100	±10'
मापांक 'म्यू एम' में VALUE IN "um"	
~	>25
▽	6-25
▽▽	1.6-6
▽▽▽	0.025-1.6
▽▽▽▽	<0.025

संख्या NO.OFF	संबंधित पुर्जोका आरेखण क्र. DRG. NO. OF ASSOCIATED PART	सूचक INDEX	संशोधन ALTERATION	दिनांक DATE	नाम NAME
	ⓐ Dim 326 was 324, dim. 82 +3.2 +1.5 deleted, two dimns. ϕ43 +2.0 +1.0 added, P.L. added	ⓐ	REF LETTER NO.5070/CODE-15/PL/INT DT-19-4-03 NO.CQA/ICV/6328/Q/D DT-4-6-96 ADDED ON DT-20-8-03 MECH. PROPERTY & CHEM.COMPOSITION ADDED ON DT-2-7-05		
	ϕ108 was 105, ϕ126 was ϕ127	ⓑ	Tolerances amended. Drg updated	30/09	
		ⓒ	Dim ϕ123.5 added	17.1.2008	

CARRIER FORGING

मापमान SCALE	आरेखित DRAWN	4.7.05
NTS	जाँचा CHECKED	5/7/05
	अनुमोदित APPROVED	
द्वारा बदला	REPLACED BY	
हेतु बदला	REPLACED FOR	

मशीनी औजार आदिरूप फैक्टरी, अम्बरनाथ
MACHINE TOOL PROTOTYPE FACTORY, AMBERNATH

कार्यालय OFFICE: D.O.

आरेखण क्र. DRAWING NO. ⑥ 765-15-156-3

मूलमाप व अन्वायोजन NOMINAL SIZE & FIT | विचलन DEVIATION

इन आरेखणो तथा इसके साथ की सम्पूर्ण सामग्री का स्वत्वाधिकार भारत सरकार रक्षा मंत्रालय की भारतीय आयुध निर्माणियों के पास है। भारतीय आयुध निर्माणियों के महानिदेशक की लिखित अनुमति के बिना इनकी नकल या किसी भी रूप में इनके उद्धरण या इनमें समाहित सूचना किसी अनधिकृत व्यक्ति को उपलब्ध नही कराई जानी चाहिए ।

THE COPYRIGHT OF THESE DRAWINGS AND ALL ATTACHMENTS THERE TO BELONGS TO THE INDIAN ORDNANCE FACTORIES, MINISTRY OF DEFENCE, GOVT. OF INDIA THEY SHOULD NOT BE COPIED,REPRODUCED IN ANY WAY OR THE INFORMATION CONTAINED THEREIN MADE AVAILABLE TO UNAUTHORISED PERSONS WITHOUT THE WRITTEN PERMISSION OF THE DIRECTOR OF ORDNANCE FACTORIES.

File Path: x

AE-3