301-101

ЕСКД

Rz80 (V)

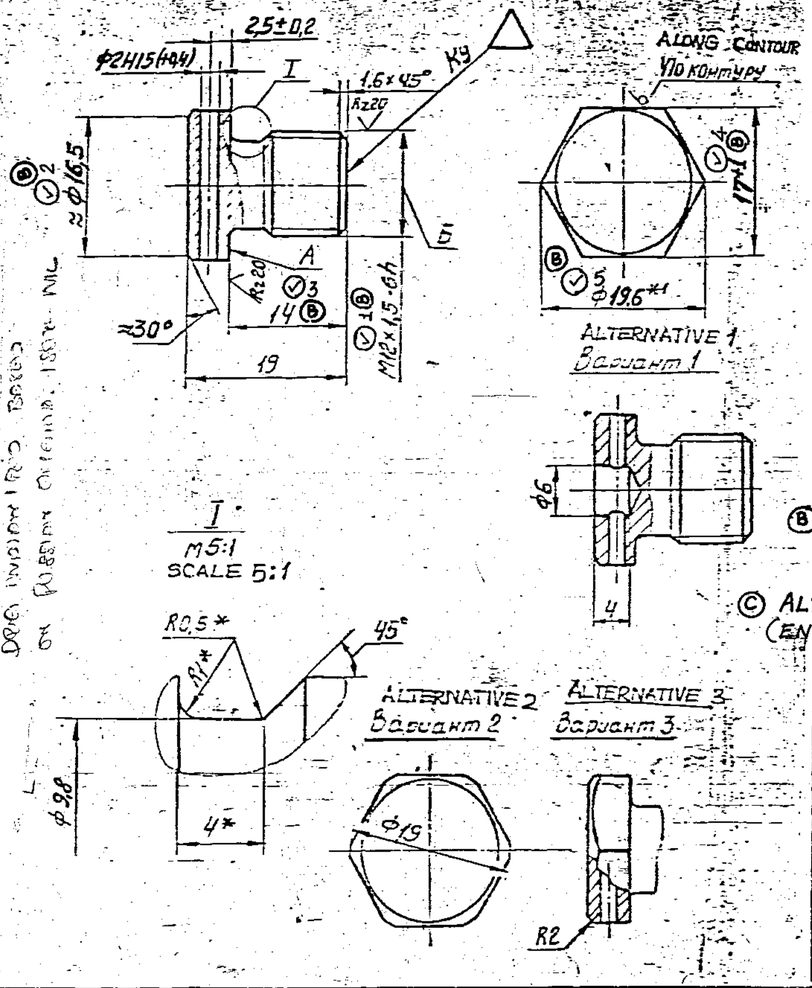

1. ALTERNATE MATERIAL : STEEL 40 AND 50 OF GOST 1050-74.
2. UNSPECIFIED MAXIMUM DEVIATIONS OF DIMENSIONS : FOR HOLES - AS PER H 14, FOR SHAFTS AS PER h 14, THE REMAINING $\pm \frac{IT\ 15}{2}$
3. END PLAY ON SURFACE 'A' RELATIVE TO THE AXIS OF THREAD Б SHOULD NOT EXCEED 0.1 mm.
5. COATING : Cd 9 Cr. AS PER ЦМ-104 WITH HYDROGEN EMBRITHLEMENT REMOVED.
6. THREAD SHOULD BE FORMED BY ROLLING, IT MAY ALSO BE FORMED BY CUTTING.
7. BOLT HEAD MAY BE MADE BY UPSETTING.
8. MARKING MAY BE DONE ON A TAG FOR A BATCH OF COMPONENTS, WITH PACKING AND SEALING.
9. * DIMENSIONS TO BE ENSURED BY TOOL.
10. *1 DIMENSIONS FOR REFERENCE.

(B) 12. REPAIR SIZE DIMENSIONS ADDED BASED ON LETTER No. 82847/OH/QAS/ED. DT. 27 MAR 95 AS PER TABLE -1.

** HEXAGON 17-5 GOST 8560-78 / 45 GOST 1051-73

(C) ALTERNATE MATERIAL: STEEL 080 M40 (EN 8) TO BS: 970. Pt I-1983 OR 45C8 TO IS: 1570

СБ 20-06-00-2
⊕ СБ 3327-00-45
СБ 3329-00-11,13 (A)
СБ 3338-401-10
СБ 20-06-00-2

PILOT SAMPLE SHOULD BE APPROVED BY A H S P BEFORE BULK PRODUCTION

			EST. MASS 0.02 Kg	TO BE STAMPED OR MARKED WHERE INDICATED THUS # / LETTERS /
C	9 6 09	3rd ALTN. COMM. MINUTES POINT 8, DT 27-2-09	ALL SHARP EDGES AND CORNERS TO BE REMOVED UNLESS OTHERWISE STATED MACHINED CORNERS TO HAVE R OUTSIDE R INSIDE EQUIVALENT CHAMFERS ARE PERMISSIBLE	
B	20-5-96	REPAIR SIZES ADDED		
A	15-2-88	AUTHY. NO. BK-81-406		
ISSUE	DATE	NATURE OF AMENDMENTS	MATERIAL ** SEE ABOVE	USED ON- СБ 406-13-32 ⊕ СБ 406-17-21 СБ 20-15-60-4
DRN		SCALE : 2 : 1	CONTROLLERATE OF QUALITY ASSURANCE (HEAVY VEHICLES) AVADI	
CHD		DIMENSIONS IN mm		
TCD		TOLERANCE ON DIMNS UNLESS OTHERWISE STATED	TITLE PLUG	
APPD				
DATE 7-4-88		ALL THREADS TO CONFORM TO	D S CAT NUMBER	DRAWING NUMBER 301-101

A2

EXPLANATORY NOTE :-

MATERIAL QUOTED :- HEXAGONAL BAR 17-5 GOST 8560-78 / 45 GOST 1051-73.

ALTERNATE MATERIAL QUOTED :- 40 & 50 GOST 1050-74.

BRIGHT STEEL HEXAGONAL FROM GRADES 40, 45 & 50 STEEL WITH ACROSS FLATS 17mm OF ACCURACY CLASS-5.

CHEMICAL COMPOSITION :-

GRADE OF STEEL	CONTENT OF ELEMENTS %							
	C	Si	Mn	Cr	P	S	Cu	Ni
				MAXIMUM				
40	0·37-0·45	0·17-0·37	0·50-0·80	0·25	0·035	0·040	0·25	0·25
45	0·42-0·50	0·17-0·37	0·50-0·80	0·25	0·035	0·040	0·25	0·25
50	0·47-0·55	0·17-0·37	0·50-0·80	0·25	0·035	0·040	0·25	0·25

MECHANICAL PROPERTIES :-

GRADE OF STEEL	TENSILE STRENGTH Kgf/mm²	YIELD POINT Kgf/mm²	ELONGATION %	REDUCTION IN AREA %	IMPACT STRENGTH Kgf/cm²
	MINIMUM				
40	58	34	19	45	6
45	61	36	16	40	5
50	64	38	14	40	4

(B) REPAIR SIZE DIMENSIONS ARE ADDED WHERE INDICATED THUS (✓)

TABLE -1

SL. No.	R	REMARKS
(✓)1	M14 X 1·5 -6h	1. ALL OTHER CONDITIONS AS PER STD. DRG.
(✓)2	ϕ 18·5	2. MARK REPAIR SIZE.
(✓)3	14 ±0·1	
(✓)4	A/F $19^{-0.14}$	
(✓)5	A/C ϕ 21	

329-09-4

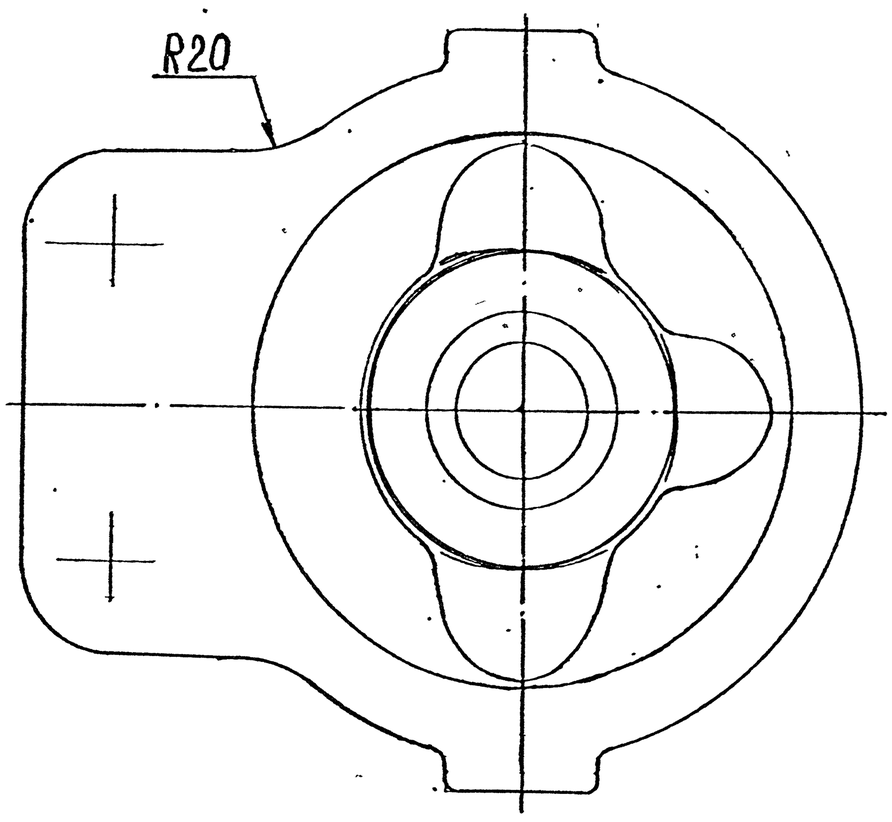

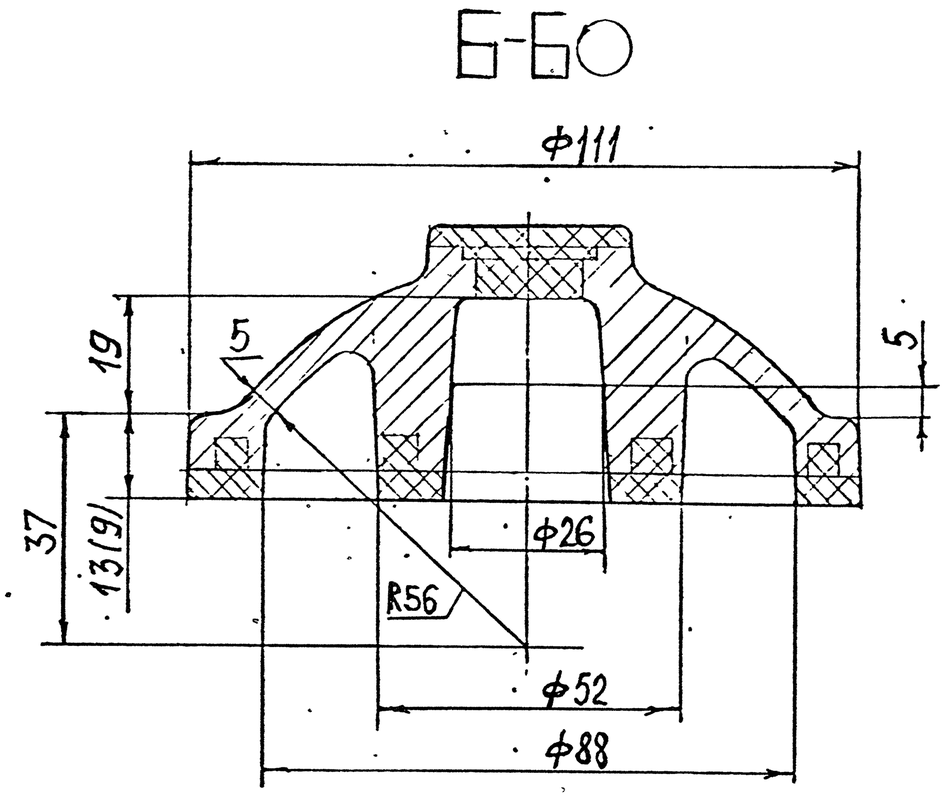

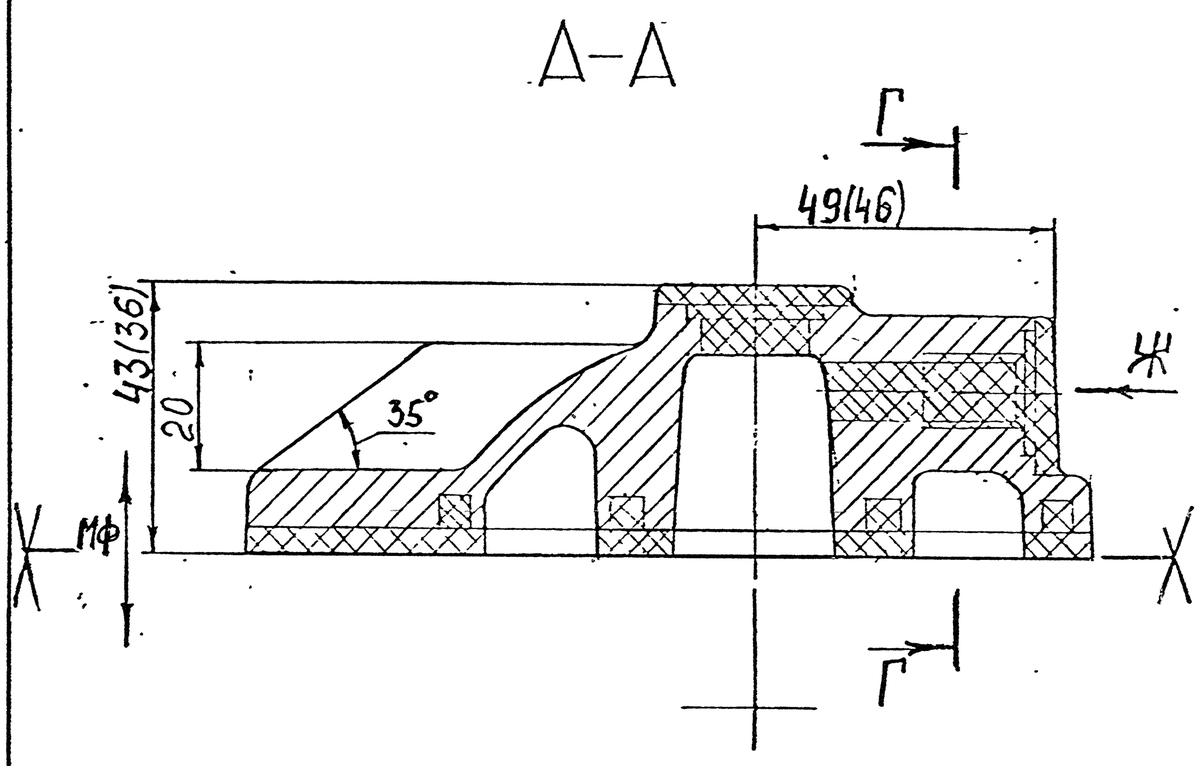

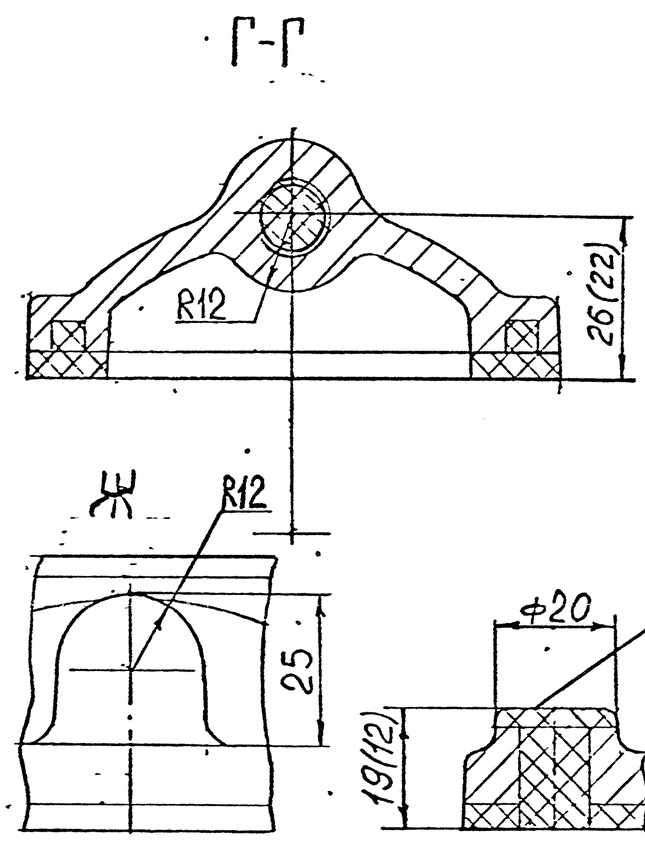

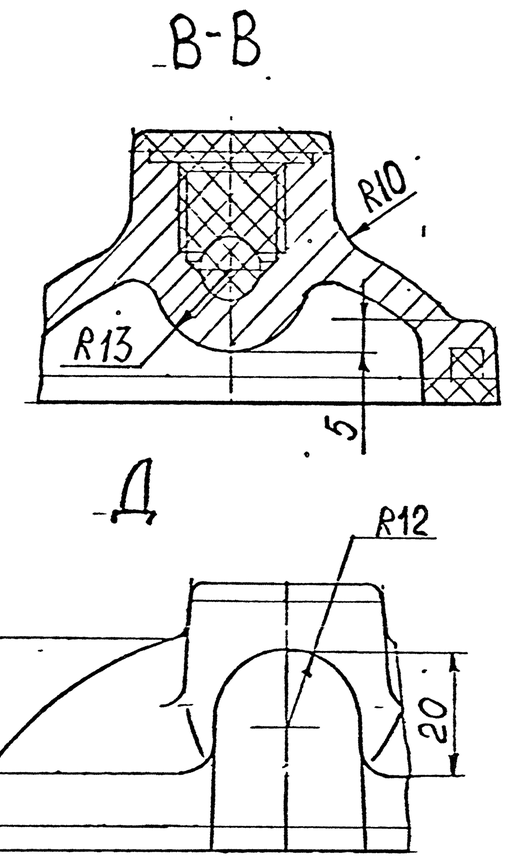

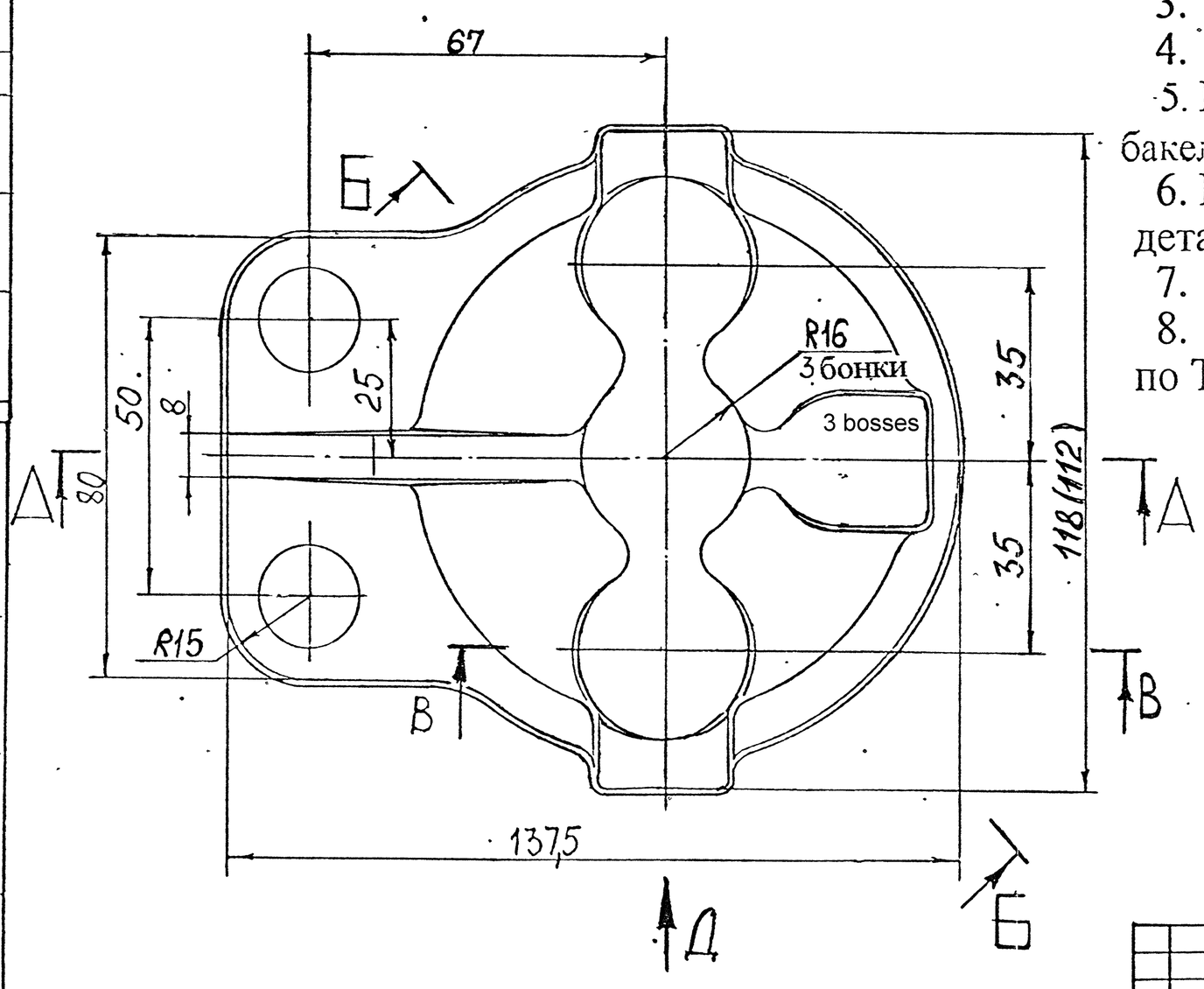

1. Допускается замена материала на СЧ 20 ГОСТ 1412 - 85.
2. Неуказанные литейные радиусы до 5мм.
3. Литейные уклоны до 3°.
4. Точность отливки 11-0-0-11 ГОСТ 26645-85.
5. Покрытие литейных поверхностей:лак бакелитовый ЛБС-1 по ИЛ 665-86.
6. Размеры в скобках даны для обработанной детали .
7. Базовые места обозначены по ГОСТ 3.1107-81
8. Остальные технические требования к отливке по ТТМ90-85.

1. It is permitted to replace material by СЧ-20 GOST 1412-85.
2. Unspecified draft angles upto 5 mm.
3. Draft angles upto 3 deg.
4. Accuracy of casting 11-0-0-11 GOST 26645-85.
5. Coat surfaces of casting by - bakelite varnish ЛБС - 1 as per ИЛ 665-86.
6. Dimensions in brackets are given for machined part.
7. Base is coded as per GOST 3.1107-81.
8. Other technical requirments for casting are according to TTM90-85.

					Filter cover (casting)	329-09-4	
Изм	Лист	№ докум	Подп	Дата	Крышка фильтра (отливка)	Лит / Масса Weight	Масштаб Scale 1:1
Trans. & Ckd. by : M/s SWYAZ						Лист Sheet	Листов 1 Sheets
Authenticated by :					GOST СЧ 15 ГОСТ 1412-85	Ф 35/54	
Approved by :							
Engine Factory, Avadi							

Перв. примен. | Подп. и дата | Взам. инв. № | Инв. № дубл. | Подп. и дата

DRAWING NUMBER
329-11-6

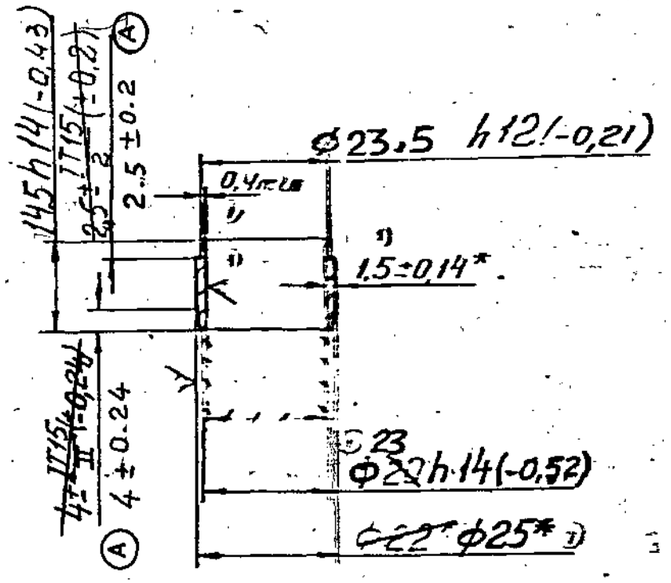

Размеры для справок.

* DIMENSIONS FOR REFERENCE

EXPLANATORY NOTE :-

MATERIAL QUOTED: PIPE 25X1,5 AMG6 . GOST 18475-73

ALUMINIUM ALLOY

25	=	NOMINAL DIAMETER
1,5	=	WALL THICKNESS
AMG6	=	GRADE

CHEMICAL COMPOSITION AS PER GOST 4784-65

ALUMINIUM	=	BASE CONSTITUENT
MAGNESIUM	=	5,8–6,8
MANGANESE	=	0,5–0,8
TITANIUM	=	0,02–0,10
BERYLLIUM	=	0,0002–0,005

OTHER IMPURITIES (max)

IRON	=	0,4
SILICON	=	0,4
COPPER	=	0,1
ZINC	=	0,2

OTHER IMPURITIES (a) individually = 0,05
(b) totally ≤ 0,1

MECHANICAL PROPERTIES AS PER GOST 18475-73

ULTIMATE TENSILE STRENGTH	=	32 Kgf/mm² (min)
YIELD POINT	=	15 Kgf/mm² (min)
PERCENTAGE OF ELONGATION	=	15 (min)

PILOT SAMPLE SHOULD BE APPROVED BY A H S P BEFORE BULK PRODUCTION

EST. WT. 0.004 kg

TO BE STAMPED OR MARKED WHERE INDICATED THUS # (LETTERS)

ALL SHARP EDGES AND CORNERS TO BE REMOVED UNLESS OTHERWISE STATED MACHINED CORNERS TO HAVE R OUT SIDE R INSIDE EQUIVALENT CHAMFERS ARE PERMISSIBLE

ISSUE	DATE	NATURE OF AMENDMENTS
A	11.8.97	AUTHY NOTN. No BK 87-588
3		BK 85-610

DRN	
CHD	
TCD	
APPD	
DATE	3-2-88
SCALE:-	1:1
DIMENSIONS IN mm TOLERANCE ON DIMNS UNLESS OTHERWISE STATED IS:2102-69	
ALL THREADS TO CONFORM TO	

MATERIAL:- ROUND PIPE 25x1.5 AMG6 GOST 18475-73

USED ON CБ 329-69-1 ~~CБ 329-02-3~~

CONTROLLERATE OF QUALITY ASSURANCE(HEAVY VEHICLES) AVADI

TITLE BUSHING

D S CAT NUMBER

DRAWING NUMBER 329-11-6

SIZE A3

DRAWING NUMBER
329-12-8

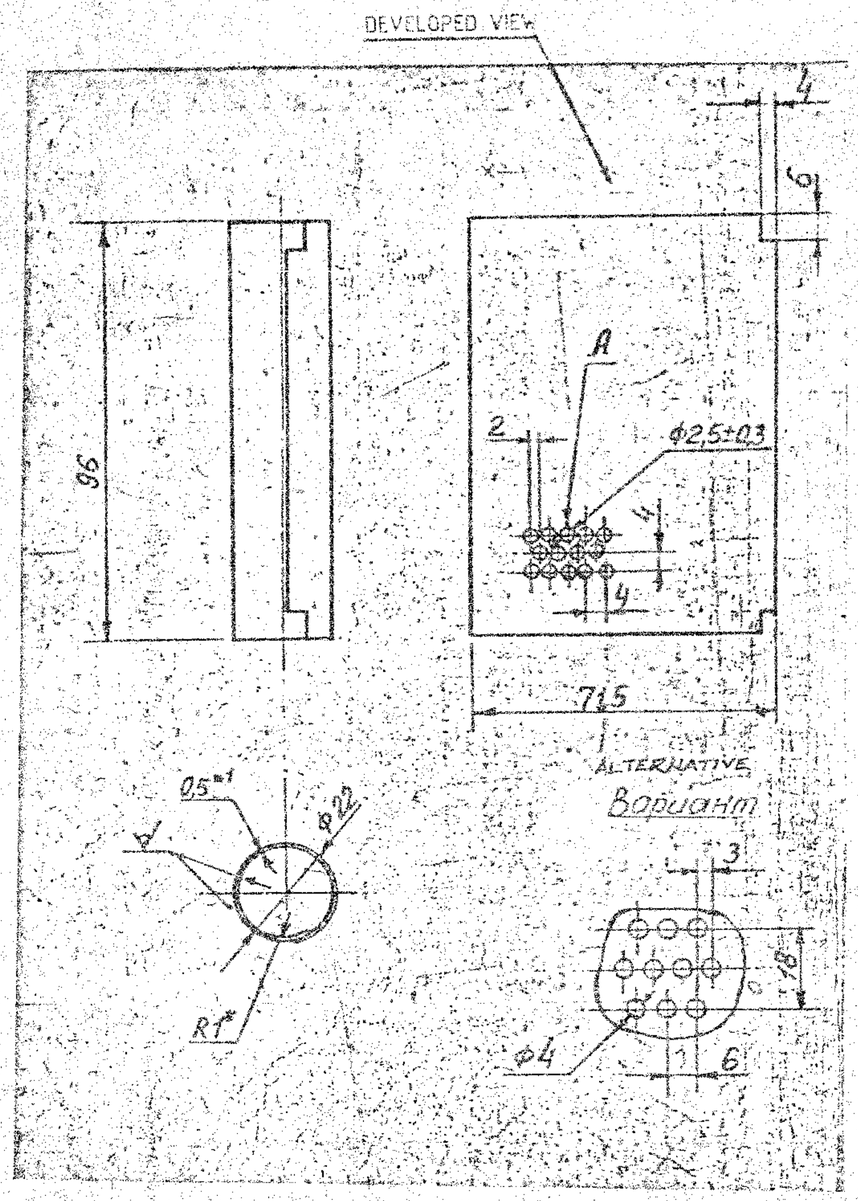

EXPLANATORY NOTE

MATERIAL QUOTED: TAPE А ПРНМ 0.5 Л63 GOST 2208-75

ALTERNATE MATERIAL QUOTED: SHEET А ПРМ Л63 GOST 931-78

А = COLD ROLLED
ПР = RECTANGULAR SECTION
Н = NORMAL ACCURACY
М = SOFT
63 = GRADE OF BRASS
0.5 = THICKNESS IN MM

CHEMICAL COMPOSITION % AS PER GOST 15527-70

BASIC ELEMENTS

COPPER= 62.0-65.0 ZINC = REST

ADMIXTURES MAXIMUM

LEAD = 0.07, IRON : 0.2, ANTYMONY : 0.005
BISMUTH = 0.002, PHOSPHORUS = 0.01, TOTAL = 0.5

MECHANICAL PROPERTIES: Л63 GOST 2208-75

1. DENSITY = 8.5 gm / cm^3
2. TENSILE STRENGTH Kg / mm^2 = 30-42
3. % RELATIVE ELONGATION = 38 (min)
4. BEND TEST IS DONE FOR SOFT STRIPS = 180°

CHEMICAL COMPOSITION %

SHEET Л63 GOST 931-78

COPPER = 62.0-65.0, ZINC = REMAINDER

ADMIXTURES MAXIMUM

LEAD = 0.07, IRON = 0.2, ANTIMONY = 0.005
BISMUTH = 0.002, PHOSPHORUS = 0.01
TOTAL OF ADMIXTURES = 0.5 (max)

MECHANICAL PROPERTIES Л63 GOST 931-78

ULTIMATE TENSILE STRENGTH Kgf / mm^2 = 32-41
% ELONGATION 38 (min)
BRINNEL HARDNESS = 70

1 UNSPECIFIED TOLERANCES OF DIMENSIONS ± 0.5 mm.
2. FLATTENED BURRS ARE ALLOWED IN HOLES OF STRAINER
3. ARRANGEMENT OF HOLES 'A' RELATIVE TO CONTOUR OF COMPONENT IS ARBITRARY.

* DIMENSION SHOULD BE ENSURED BY TOOL
* DIMENSION FOR REFERENCE
ALTERNATE MATERIAL - SHEET А ПРМ Л63 GOST 931-78

PILOT SAMPLE SHOULD BE APPROVED BY A H S P BEFORE BULK PRODUCTION.

EST. WT. .0.017 Kg	TO BE STAMPED OR MARKED WHERE INDICATED THUS * (LETTERS)

ALL SHARP EDGES AND CORNERS TO BE REMOVED UNLESS OTHERWISE STATED MACHINED CORNERS TO HAVE R OUTSIDE R INSIDE EQUIVALENT CHAMFERS ARE PERMISSIBLE.

ISSUE	DATE	NATURE OF AMENDMENTS

DRN
CHD
TDD
APPD
DATE 23-5-85
SCALE :- 1:1
DIMENSIONS IN mm
TOLERANCE ON DIMS UNLESS OTHERWISE STATED IS 2102-69
ALL THREADS TO CONFORM TO

MATERIAL :- TAPE А ПРНМ 0.5 Л63 GOST 2208-75

USED ON :- CB 329-02-7

CONTROLLERATE OF QUALITY ASSURANCE (HEAVY VEHICLES)
A V A D I

TITLE
FILTER STRAINER

D S CAT NUMBER

DRAWING NUMBER
329-12-8

329-13-9

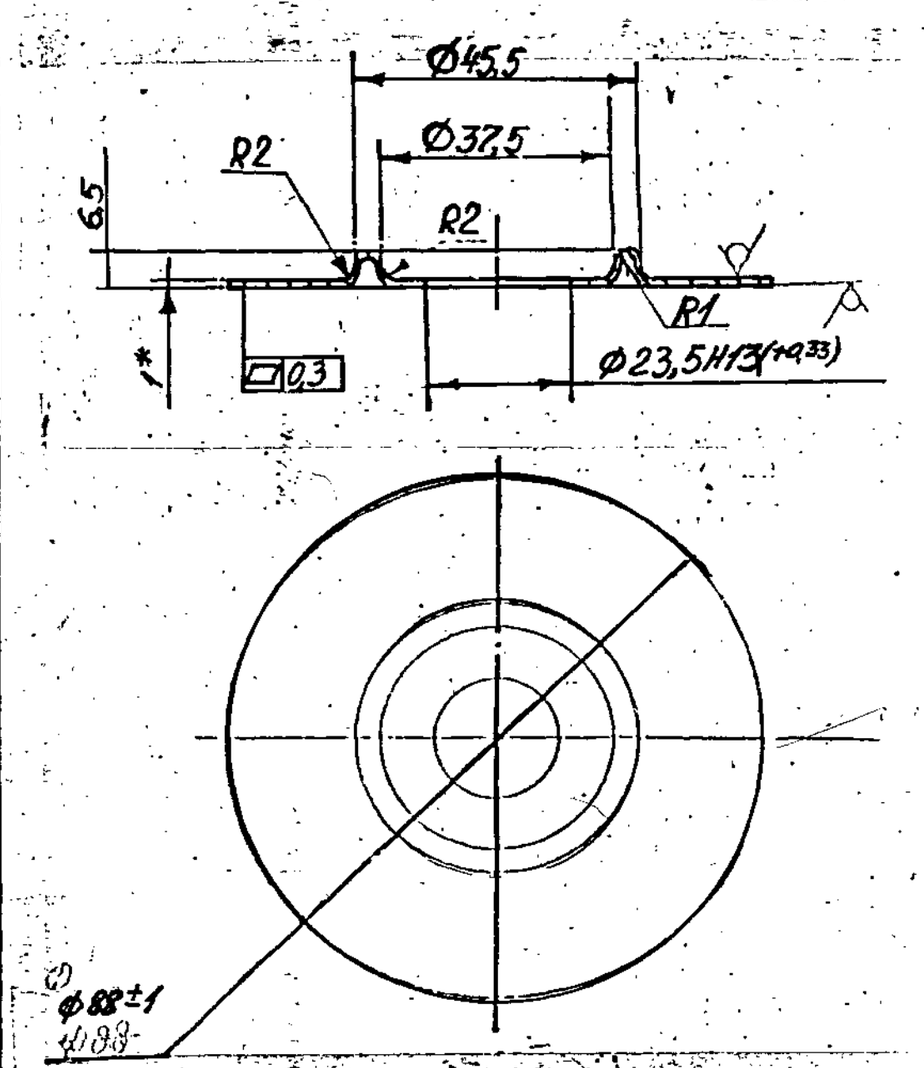

2. * DIMENSIONS FOR REFERENCE.
3. UNSPECIFIED TOLERANCES ON DISPOSITION OF SURFACES AS PER GOST 25069-81.
4. ALTERNATE MATERIAL : SHEET ,Д,ГП РМ 0.8 Л63. GOST 931-78.

EXPLANATORY NOTE :

5. MATERIAL QUOTED : SHEET ,Д,ГПРМ1 Л63 GOST 931-78.

Alt-Mat QUOTED : SHEET ,Д,ГПРМ 0.8 Л63 GOST 931-78.

,Д, = COLD ROLLED Л63 = GRADE OF BRASS SHEET.

ГПР = SECTION SHAPE RECTANGULAR.

M = SOFT 0.8 / 1.0 } THICKNESS

a) CHEMICAL COMPOSITION % AS PER GOST 15527-70.

COPPER = 62 - 65.

ZINC = REMAINDER

ADMIXTURES

LEAD	=	0.07 (max)
IRON	=	0.2 (max)
ANTIMONY	=	0.005 (max)
BISMUH	=	0.002 (max)
PHOSPHORUS	=	0,01 (max
TOTAL OF ADMIXTURES	=	0.5 (max)

b) MECHANICAL PROPERTIES : AS PER GOST 931-78.

ULTIMATE TENSILE STRENGTH	=	30 - 41 Kgf/mm²
% ELONGATION	=	38 (min)
BRINNEL HARDNESS	=	70

DRAWING INDIANISED BASED ON RUSSIAN ORIGINAL

ISSUE No: 4 (BK 85-610)

PILOT SAMPLE SHOULD BE APPROVED BY A H S P BEFORE BULK PRODUCTION.

EST. WT. 0.048 Kg

TO BE STAMPED OR MARKED WHERE INDICATED THUS # (LETTERS)

ALL SHARP EDGES AND CORNERS TO BE REMOVED UNLESS OTHERWISE STATED MACHINED CORNERS TO HAVE R OUT SIDE R INSIDE EQUIVALENT CHAMFERS ARE PERMISSIBLE.

ISSUE	DATE	NATURE OF AMENDMENTS

DRN	
CHD	
TCD	
APPD	
DATE	3-6-89
SCALE	1 : 1
DIMENSIONS IN mm	
TOLERANCE ON DIMNS UNLESS OTHERWISE STATED IS:2102-69	
ALL THREADS TO CONFORM TO	

MATERIAL:- SHEET ,Д,ГПРМ1 Л63 GOST 931-78

USED ON CG 329-69-1

CONTROLLERATE OF QUALITY ASSURANCE(HEAVY VEHICLES) AVADI

TITLE PLATE

D S CAT NUMBER

DRAWING NUMBER 329-13-9

SIZE A3

DRAWING NUMBER
329 14 7

Rz80 (✓)

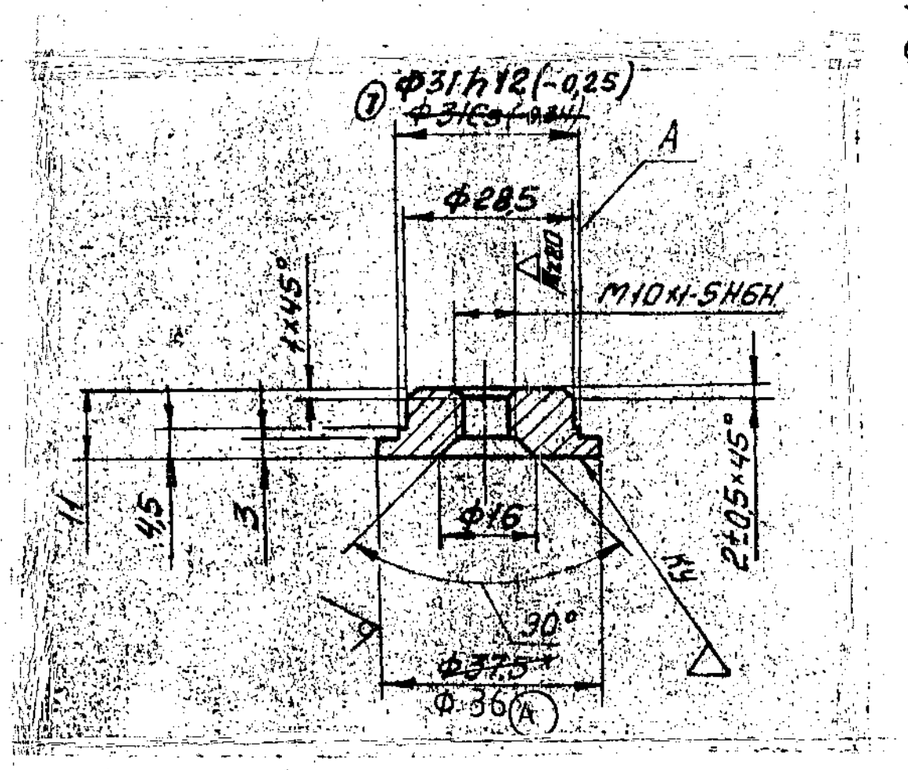

1. ALTERNATE MATERIAL: STEEL GRADE 15 AND 25, GOST 1050-74.
2. UNSPECIFIED TOLERANCES OF DIMENSIONS FOR HOLES AS PER H14, FOR SHAFTS AS PER h 14, AND THE REST OF THE RARTS ± IT 14/2
3. THREAD AND AXIS OF SURFACE 'A' SHOULD BE CONCENTRIC WITHIN 0.3 mm (MMC).
4. MAY BE MARKED ON A TAG FOR A BATCH OF COMPONENTS.
5. * DIMENSION FOR REFERENCE.

EXPLANATORY NOTE:

6. REFERENCE MATERIAL QUOTED:

COLD DRAWN SIZED STEEL BAR, CLASS OF ACCURACY '5', 37.5 (-0.340)mm TO GOST 7417-75 FROM HIGH GRADE SIZED STEEL OF NORMAL SURFACE QUALITY TO GOST 1051-73 AND MANUFACTURED IN ACCORDANCE WITH QUALITY CARBON STRUCTURAL STEEL GRADE 20 TO GOST 1050-74.

ii) REFERENCE NOTE '1' ON ALTERNATE MATERIAL QUALITY CARBON STRUCTURAL STEEL GRADES 15 AND 20 TO GOST 1050-74.

a) CHEMICAL COMPOSITION: AS PER GOST 1050-74.

GRADE OF STEEL	CONTENT OF ELEMENTS %						REMARKS
	C	Si	Mn	Cr	S	P	
				MAXIMUM			
20	0.17 - 0.24	0.17 - 0.37	0.35 - 0.65	0.25	0.040	0.035	Ref,Matl
15	0.12 - 0.19	0.17 - 0.37	0.35 - 0.65	0.25	0.040	0.035	Alt,Matl
25	0.22 - 0.30	0.17 - 0.37	0.50 - 0.80	0.25	0.040	0.035	Alt,Matl

RESIDUAL CONTENT OF COPPER AND NICKEL SHOULD NOT EXCEED 0.25% EACH.

b) MECHANICAL PROPERTIES: AS PER GOST 1050-74.

GRADE OF STEEL	ULTIMATE TENSILE STRENGTH Kgf/mm²	YIELD POINT Kgf/mm²	ELONGATION %	REDUCTION IN AREA %	IMPACT STRENGTH Kgm/cm²	HARDNESS BHN MAX	REMARKS
20	42	25	25	55	-	163	Ref,Matl
15	38	23	27	55	-	149	Alt,Matl
25	46	28	23	50	9	170	Alt,Matl

PILOT SAMPLE SHOULD BE APPROVED BY A H S P BEFORE BULK PRODUCTION.

EST. WT. 0.05 Kg

TO BE STAMPED OR MARKED WHERE INDICATED THUS # (LETTERS)

ALL SHARP EDGES AND CORNERS TO BE REMOVED UNLESS OTHERWISE STATED MACHINED CORNERS TO HAVE R OUTSIDE R INSIDE EQUIVALENT CHAMFERS ARE PERMISSIBLE

ISSUE	DATE	NATURE OF AMENDMENTS
A	06,4,88	AUTHY NOTN NO BK 83-689

DRN
CHD
TCD
APPD
DATE 30·6·86
SCALE: 1 : 1
DIMENSIONS IN mm
TOLERANCE ON DIMNS UNLESS OTHERWISE STATDD
ALL THREADS TO CONFORM TO

MATERIAL: ROUND BAR 36-5 GOST 7417-75 (A)
20 GOST 1051-73

USED ON: СБ 329 03 7

CONTROLLERATE OF INSPECTION(HEAVY VEHICLES) AVADI

TITLE: UNION

D S CAT NUMBER

DRAWING NUMBER 329 14 7

(A-8)

SIZEA3

DRAWING NUMBER
329 16 5

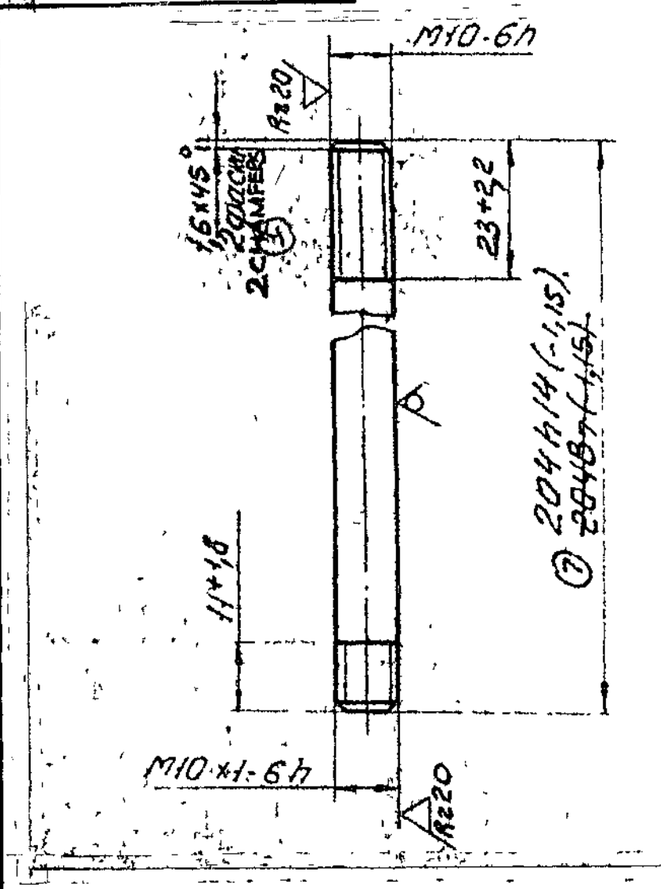

1. ALTERNATE MATERIAL · STEEL, GRADES 15 AND 25, GOST 1050-74
2. NON-STRAIGHTNESS OF STUD SHOULD NOT EXCEED 0 25mm ON A LENGTH OF STUD.
3. CHOPPING OF FACES IS ALLOWED, IN THIS CASE DRAFT SHOULD NOT EXCEED 1mm.

EXPLANATORY NOTE:

Rz 80 √(√)

(I) REFERENCE MATERIAL QUOTED:

COLD DRAWN SIZED STEEL BAR, CLASS OF ACCURACY 5 DIA 10.0 (-0 200)mm, TO GOST 7417-75, FROM HIGH GRADE SIZED STEEL TO GOST 1051-73 AND MANUFACTURED IN ACCORDANCE WITH QUALITY CARBON STRUCTURAL STEEL GRADE 20 TO GOST 1050-74

(II) REFERENCE NOTE 1 ON ALTERNATE MATERIAL

QUALITY CARBON STRUCTURAL STEEL GRADE 15 AND 25 TO GOST 1050-74

a) CHEMICAL COMPOSITION AS PER GOST 1050-74

GRADE OF STEEL	CONTENT OF ELEMENTS %						REMARKS
	C	Si	Mn	Cr	S	P	
				MAXIMUM			
20	0 17 0.24	0.17 0.37	0 35 0.65	025	0.040	0 035	Ref, Matl
15	0 12 0 19	0.17 037	0.35 0.65	025	0.040	0.035	Alt Matl
25	0 22 0.30	0.17 0.37	0.50 0.80	0.25	0.040	0.035	Alt Matl

RESIDUAL CONTENT OF COPPER AND NICKEL SHOULD NOT EXCEED 0.25 % EACH.

b) MECHANICAL PROPERTIES AS PER GOST 1050-74

GRADE OF STEEL	ULTIMATE TENSILE STRENGTH Kgf/mm²	YIELD POINT Kgf/mm²	ELONGATION %	REDUCTION IN AREA %	IMPACT STRENGTH Kgfm/Cm²	HARDESS B H N Max	REMARKS
20	42	25	25	55	—	163	Ref Matl
15	38	23	27	55	—	149	Alt. Matl
25	46	28	23	50	9	170	Alt. Matl

PILOT SAMPLE SHOULD BE APPROVED BY A H S P BEFORE BULK PRODUCTION

EST. WT. 0.12 Kg

TO BE STAMPED OR MARKED WHERE INDICATED THUS # (LETTERS)

ALL SHARP EDGES AND CORNERS TO BE REMOVED UNLESS OTHERWISE STATED MACHINED CORNERS TO HAVE R OUTSIDE R INSIDE EQUIVALENT CHAMFERS ARE PERMISSIBLE

ISSUE	DATE	NATURE OF AMENDMENTS

DRN
CHD
TCD
APPD
DATE 30-5-86
SCALE 1 · 1
DIMENSIONS IN mm
TOLERANCE ON DIMNS UNLESS OTHERWISE STATED
ALL THREADS TO CONFORM TO

MATERIAL ROUND BAR
10.5 GOST 7417-75
20 GOST 1051-73

USED ON
CG 329 03 7

CONTROLLERATE OF INSPECTION(HEAVY VEHICLES) AVADI

TITLE: COUPLING STUD

D S CAT NUMBER

DRAWING NUMBER
329 16 5

A-8
SIZE A3

DRAWING NUMBER
329 22 1

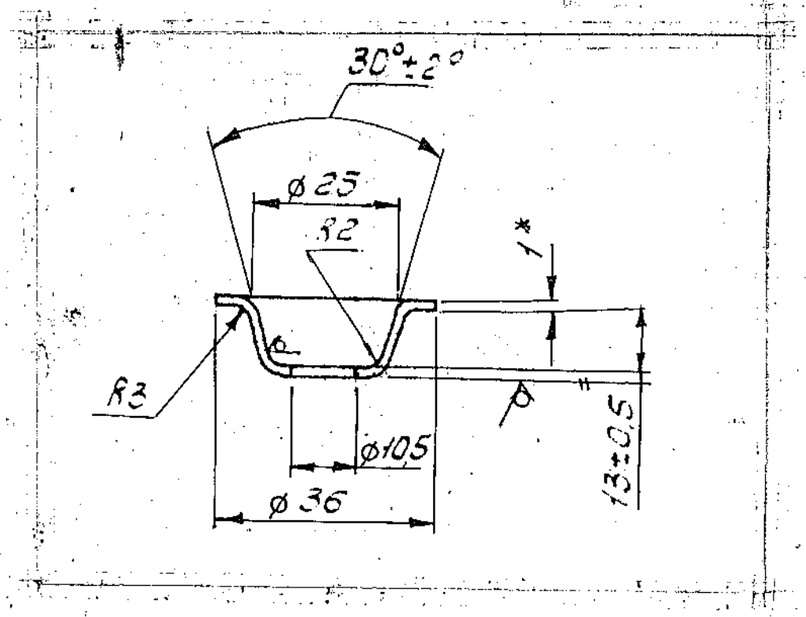

1. ALTERNATE MATERIAL : STEET Д1 Л63 GOST 931-78.
2. REQUIREMENTS FOR STAMPING AS PER STANDARD 82050-16.
3. *DIMENSION FOR REFERENCE.

EXPLANATORY NOTE:

Rz 320 √(√)

4. REFERENCE MATERIAL QUOTED :

ALUMINIUM SHEET WITHOUT HEAT TREATMENT, WITH NORMAL MANUFACTURING ACCURACY, ANNEALED M, 1mm THICK, GRADE АД1 TO GOST 21631-76 AND MANUFACTURED IN ACCORDANCE WITH ALUMINIUM GRADE АД1 TO GOST 4784-74

a) CHEMICAL COMPOSITION AS PER GOST 4784-74

CONTENT OF ELEEMENTS %									
ALUMINIUM GRADE	ALLOYING CONSTITUENT	IMPURITIES MAXIMUM							OTHER IMPURITIES EACH INDIVIDUALLY.
	Al	Fe	Si	Cu	Mn	Zn	Ti	Mg	
АД1	Min 99,30	0,30	0,30	0,05	0,025	0,1	0,1	0.05	0.02

b) MECHANICAL PROPERTIES AS PER GOST 21631-76

MATERIAL CONDITION	ULTIMATE TENSILE STRENGTH Kgf/mm²	ELONGATION %
	MINIMUM	
ANNEALED	6.0	28.0

5. REFERENCE NOTE 1 ON ALTERNATE MATERIAL COLD ROLLED Д BRASS SHEET THICKNESS 1mm TO GRADE Л63 TO GOST 931-78 AND MANUFACTURED IN ACCORDANCE WITH BRASS GRADE Л63 TO GOST 15527-70.

a) CHEMICAL COMPOSITION AS PER GOST 15527-70.

BRASS GRADE	CONTENT OF ELEMENTS %							
	BASIC ELEMENT		ADMIX - MAXIMUM					
	Cu	Zn	Pb	Fe	Sb	Bi	P	TOTAL
Л63	62.0-65.0	REST	0.07	0.2	0.005	0.002	0.01	0.5

b) MECHANICAL PROPERTIES AS PER GOST 931-78.

BRASS GRADE	ULTIMATE TENSILE STRENGTH Kgf/mm²	ELONGATION %
Л63	30 - 40	30

PILOT SAMPLE SHOULD BE APPROVED BY A H S P BEFORE BULK PRODUCTION

EST WT	TO BE STAMPED OR MARKED WHERE INDICATED THUS ⊣⊢
0,0036Kg	LETTERS)

ALL SHARP EDGES AND CORNERS TO BE REMOVED UNLESS OTHERWISE STATED MACHINED CORNERS TO HAVE R OUTSIDE R INSIDE EQUIVALENT CHAMFERS ARE PERMISSIBLE

ISSUE	DATE	NATURE OF AMENDMENTS
A	15-2-88	AUTHY. NOTN. NO. BK 81-406

DRN	
CHD	
TCD	
APPD	
DATE	02.6.86
SCALE	1 : 1
DIMENSIONS IN mm	
TOLERANCE ON DIMNS UNLESS OTHERWISE STATED	
ALL THREADS TO CONFORM	

MATERIAL: АД1М-1 GOST 21631-76

USED ON: СБ 3329 00 ~~11~~ 13 (A)

CONTROLLERATE OF INSPECTION (HEAVY VEHICLES AVADI

TITLE: CUP OIL SEAL

D S CAT NUMBER:

DRAWING NUMBER: 329 22 1

(A 8) SIZE A3

DRAWING NUMBER
329 23 1

EXPLANATORY NOTE:

2. REFERENCE MATERIAL QUOTED:

FINE WOOL DISC-TYPE PACKING FILTER TYPE TΦ, 22.0mm O/D, 8.0mm I/D, 18.0mm THICK TO GOST 288-72 AND IMPREGNATED WITH ANTISEPTICS FOR FILTERS - T, TO GOST 15159-76.

CHEMICAL COMPOSITION:

a) FINE VIRGIN WOOL - 60 - 30%
b) SEMI FINE VIRGIN WOOL - - - - - - - - - - - - - - - - - - 20%
c) SEMI-COARSE VIRGIN WOOL - - - - - - - - - - - - - - - - 25%
d) FINE AND SEMI FINE LARGE COMBINGS AND FURRY SHEEP WOOL OF I AND II CATEGORY } - - - 25%

PHYSICO-MECHANICAL AND CHEMICAL PROPERTIES:

a) MOISTURE CONTENT (STANDARD) - - - - - - - - - - - - 13%
b) VOLUMETRIC WEIGHT - - - - - - - - - - - - - - - - - - - 0.25 ± 0.02 gm/cm^3
c) CONTENT OF FREE SULPHURIC ACID - - - - - - - - - - - - 0.15% (max)
d) CONTENT OF VEGETABLE ADMIXTURES - - - - - - - - - - 0.5% (max)
e) CONTENT OF NON-WOOLLEN FIBRES - - - - - - - - - - - - 5% (max)
f) CONTENT OF MINERAL ADMIXTURES - - - - - - - - - - - - 0.12% (max)

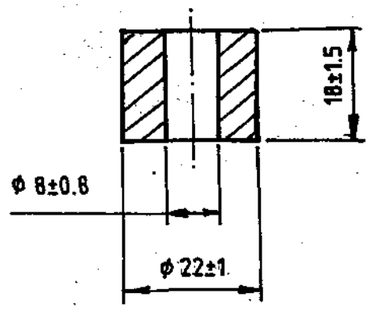

1. UNIT WEIGHT 0.25 ± 0.02 gr/cm^3.

PILOT SAMPLE SHOULD BE APPROVED BY A H S P BEFORE BULK PRODUCTION.

EST. MASS	TO BE STAMPED OR MARKED WHERE INDICATED THUS #
0.0018 Kg	(LETTERS)

ALL SHARP EDGES AND CORNERS TO BE REMOVED UNLESS OTHERWISE STATED MACHINED CORNERS TO HAVE R OUTSIDE R INSIDE EQUIVALENT CHAMFERS ARE PERMISSIBLE.

ISSUE	DATE	NATURE OF AMENDMENTS
A	15-2-88	AUTHY. NOTN. NO. BK 81-406

DRN	
CHD	
TCD	
APPD	
DATE	02.6.86
SCALE - 1 : 1	
DIMENSIONS IN mm.	
TOLERANCE ON DIMNS UNLESS OTHERWISE STATED.	
ALL THREADS CONFORM TO	

MATERIAL:- RING ΦT 22-8-18 GOST 288-72 GOST 15159-76

USED ON:- CG 3329 00 ~~11~~ 13 Ⓐ

CONTROLLERATE OF INSPECTION (HEAVY VEHICLES) AVADI

TITLE:- RING

D S CAT NUMBER

DRAWING NUMBER 329 23 1

DRAWING NUMBER
329 24 3

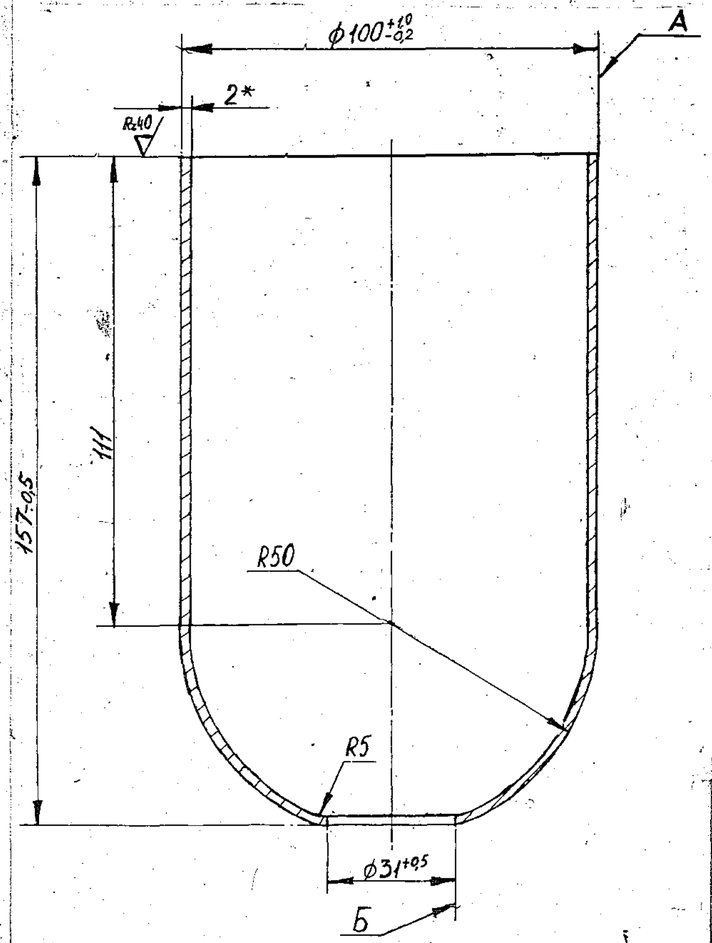

④ ~~1 Группа контроля V по ГТ-Н~~

2. Неуказанные предельные отклонения размеров ±0,5мм.

3 Несоосность отверстия Б относительно поверхности А не более 0,5мм.

4 Допускается утолщение стенки до 2,5мм и утонение стенки на радиусах до 1,7мм.

5. Заменитель материала сталь марок 08КП и 08 ГОСТ 1050-74.

6 * Размер для справок.

2. UNSPECIFIED TOLERANCES OF DIMENSIONS ± 0.5 mm.

3. HOLE b SHOULD BE CONCENTRIC TO SURFACE A WITHIN 0.5 mm.

4. INCREASE OF WALL THICKNESS UP TO 2.5 mm AND THINNING OF WALL AT RADII TO 1.7 mm, ARE ALLOWED.

5. ALTERNATE MATERIAL : STEEL, GRADES 08Kn, 08 GOST 1050-74.

6. * DIMENSION FOR REFERENCE.

EXPLANATORY NOTE:

7. REFERENCE MATERIAL QUOTED:

COLD ROLLED LOW CARBON ALLOY STEEL SHEET, HIGH ACCURACY ON ROLLING 'A' 2.0mm THICK TO GOST 19904-74, HIGH SURFACE FINISH 'II' INTRICATE DRAWING QUALITY 'CB' AND MANUFACTURED TO STEEL GRADE 08 Ю-0 TO GOST 9045-80.

a) CHEMICAL COMPOSITION AS PER GOST 9045-80:

GRADE OF STEEL	PROPORTION OF ELEMENTS BY WEIGHT %								
	C (max)	Mn	S	P	Al METAL-LIC	Si	Cr	Ni	Cu
			MAXIMUM			MAXIMUM			
08 Ю-0	0.07	0.20-0.30	0.025	0.020	0.02-0.07	0.01	0.03	0.06	0.06

(i) CARBON CONTENT UPTO 0.08% BY WEIGHT IS PERMISSIBLE IN 08 Ю-0 GRADE STEEL PROVIDED THE NORMS FOR MECHANICAL PROPERTIES ARE MET.

(ii) REMAINING ELEMENTS COPPER UPTO 0.15% AND NICKEL UPTO 0.10% BY WEIGHT MAY BE PRESENT.

(iii) SILICON CONTENT UPTO 0.03% AND CHROMIUM CONTENT UPTO 0.04% BY WEIGHT IS PERMITTED, PROVIDED THE NORMS FOR MECHANICAL PROPERTIES ARE MET.

b) MECHANICAL PROPERTIES:

CATEGORY	STEEL GRADE	ULTIMATE TENSILE STRENGTH Kgf/mm²	YIELD LIMIT Kgf/mm²	ELONGATION % min	H R B MAX
CB	08Ю-0	26 - 36	21	38	48

8. REFERENCE NOTE '5' ON ALTERNATE MATERIAL: CARBON STRUCTURAL STEEL GRADES 08Kn AND 08 TO GOST 1050-74.

a) CHEMICAL COMPOSITION:

GRADE OF STEEL	CONTENT OF ELEMENTS %					
	C	Si	Mn	Cr	S	P
				MAXIMUM		
08Kn	0.05 - 0.11	0.03 - max.	0.25 - 0.50	0.10	0.040	0.035
08	0.05 - 0.12	0.17 - 0.37	0.35 - 0.65	0.10	0.040	0.035

RESIDUAL CONTENT OF COPPER AND NICKEL SHOULD NOT EXCEED 0.25% EACH.

b) MECHANICAL PROPERTIES : AS PER GOST 16523-70:

GRADE OF STEEL	TENSILE STRENGTH Kgf/mm²	ELONGATION % min	DEPTH OF SPHERICAL HOLE MINIMUM
08Kn	27 - 39	26	11.9
08	28 - 40	25	–

PILOT SAMPLE SHOULD BE APPROVED BY A H S P BEFORE BULK PRODUCTION.

EST. MASS	TO BE STAMPED OR MARKED WHERE INDICATED THUS # (LETTERS)
0.776 Kg.	

ALL SHARP EDGES AND CORNERS TO BE REMOVED UNLESS OTHERWISE STATED MACHINED CORNERS TO HAVE R OUTSIDE R INSIDE EQUIVALENT CHAMFERS ARE PERMISSIBLE.

ISSUE	DATE	NATURE OF AMENDMENTS

DRN		MATERIAL:-SHEET A2.0 GOST 19904-74 II-CB-08Ю GOST 9045-80
CHD		USED ON:- CG 329 08 6
TCD	Narayanpuri	CONTROLLERATE OF INSPECTION (HEAVY VEHICLES) AVADI
APPD		
DATE	02·6·86	
SCALE - 1 : 1		
DIMENSIONS IN mm.		TITLE:- FILTER BOWL
TOLERANCE ON DIMNS UNLESS OTHERWISE STATED.		
ALL THREADS CONFORM TO		D S CAT NUMBER / DRAWING NUMBER 329 24 3

A-8

SIZE A2

DRAWING NUMBER
329 25 2

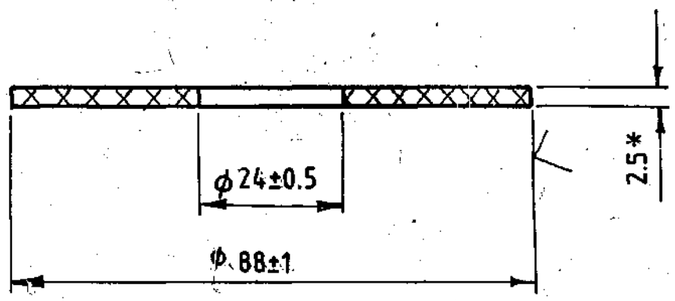

1. * DIMENSION FOR REFERENCE.

EXPLANATORY NOTE:

2. REFERENCE MATERIAL QUOTED:

BOARD KФПT-1 MEANT FOR FILTERING DIESEL FUEL TO TY 81-04-421-76

1. MASS OF $1m^2$ - 680±50g
   MASS OF $1m^2$ OF TWO BOARD LAYERS - - - - - - - - - - - - - - 1360±100g
2. THICKNESS - 2.5±0.25mm
   THICKNESS OF TWO BOARD LAYERS - - - - - - - - - - - - - - 5.0±0.5mm
3. DAMPNESS MAXIMUM - 8%
4. RESISTANCE TO AIR CURRENT (mmH2O) - - - - - - - - - - - - - 2.5 - 5.5
   RESISTANCE TO AIR CURRENT THROUGH TWO SHEETS (mmH2O) } - - - - - - - - - - - - 5.0 - 11.0
5. ABSORBAILITY (MOISTURE CAPACITY) MAXIMUM - - - - - - - - 20%

BOARD SHOULD BE MANUFACTURED OUT OF UNBLEACHED SULPHATE CECLULOSE MERCERIZED AND UNMERCERIZED, AND OUT OF BLEACHED AS PER CELLULOSE WITH AN ADMIXTURE OF COLOPHONY GLUE AND MELAMINE RESIN.

(A) 6 EACH BATCH OF CARDBOARD IS TO BE CHECKED FOR COMPLAINCE WITH SECTION 1, POINT 1.2.1 TY 81-04-421-76

DRAWING INDINIZED BASED ON ISSUE 4

KVD No:-78531

(A-8)

SIZE A3

PILOT SAMPLE SHOULD BE APPROVED BY A H S P BEFORE BULK PRODUCTION

EST. WT.	TO BE STAMPED OR MARKED WHERE INDICATED THUS # (LETTERS)
0.0037 Kg	

ALL SHARP EDGES AND CORNERS TO BE REMOVED UNLESS OTHERWISE STATED MACHINDD CORNERS TO HAVE R OUT-SIDE R INSIDE EQUIVALENT CHAMFERS ARE PERMISSIBLE

ISSUE	DATE	NATURE OF AMENDMENTS
B	29.10.91	AUTHY LT. No.90215/AHSP/ED/AL dt 17.10.97
A	23.11.87	AUTHY BK 82-345

DRN		MATERIAL: FILTER BOARD KФПT-1TY-81-04-421-76
CHD		USED ON: C6 329 61-1 ~~C6 329 05-1~~ (B)
TCD	Naveen Kumar	CONTROLLERATE OF INSPECTIONHEAVY VEHICLES) AVADI
APPD		
DATE	82-6-86	
SCALE: 1 : 1		TITLE: FILTER PLATE
DIMENSIONS IN mm		
TOLERANCE ON DIMNS UNLESS OTHERWISE STATED		
ALL THREADS TO CONFORM TO		D S CAT NUMBER
		DRAWING NUMBER 329 25 2

8

DRAWING NUMBER

329 27 2

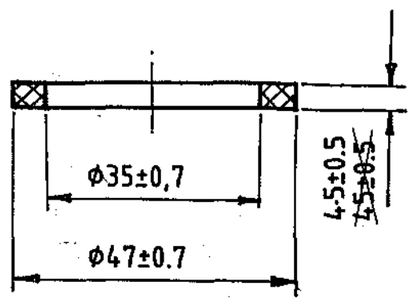

1. UNIT WEIGHT 0.34 $^{+0,02}_{-0,01}$ gr/cm^3

EXPLANATORY NOTE:

2. REFERENCE MATERIAL QUOTED:

FINE WOOL RING-TYPE PACKING GASKET "ПР" 47.0mm O/D, 35.0mm I/D, 4.5mm THICK TO GOST 288-72 AND INPREGRATED WITH ANTISEPTICS FOR GASKET - T.TO GOST 15159-76.

FINE WOOL FELT IS FABRICATED FROM A MIXTURE OF THE FOLLOWING COMPOSITION:

i) FINE VIRGIN WOOL NOT BELOW GRADE - - - - - - - - - - - - .60 - 30%

ii) SEMI-FINE VIRGIN WOOL - - - - - - - - - - - - - - - - - - - 20%

iii) SEMI-COARSE VIRGIN WOOL - - - - - - - - - - - - - - - - - 25%

iv) FINE AND SEMI-FINE LARGE COMBINGS AND FURRY SHEEP WOOL OF I AND II CATEGORY } - - - - - 25%

PHYSICO-MECHANICAL AND CHEMICAL PROPERTIES:

i) VOLUMETRIC WEIGHT (min) - - - - - - - - - - - - - - - - - - 0.34 $^{+0,02}_{-0,01}$ gr/cm^3

ii) TENSILE STRENGTH (min) - - - - - - - - - - - - - - - - - - 20 Kg/cm^2

iii) ELONGATION AT RUPTURE (max) - - - - - - - - - - - - - - - 160%

iv) CONTENT OF FREE STATE SULPHURIC ACID (max) - - - - - - - 0.2%

v) MOISTURE CONTENT (STANDARD) - - - - - - - - - - - - - 13%

vi) CONTENT OF VEGETABLE ADMIXTURES (max) - - - - - - - - - 0.5%

vii) CONTENT OF NON-WOOLLEN FIBRES (max) - - - - - - - - - - 5.0%

viii) CONTENT OF MINERAL ADMIXTURES (TOGETHER WITH ASH FROM VEGETABLE ADMIXTURES) (max) } - - - - 0.12%

PILOT SAMPLE SHOULD BE APPROVED BY A H S P BEFORE BULK PRODUCTION.

EST. MASS 0.0014 Kg	TO BE STAMPED OR MARKED WHERE INDICATED THUS # (LETTERS)
ALL SHARP EDGES AND CORNERS TO BE REMOVED UNLESS OTHERWISE STATED MACHINED CORNERS TO HAVE R OUTSIDE R INSIDE EQUIVALENT CHAMFERS ARE PERMISSIBLE.	

ISSUE	DATE	NATURE OF AMENDMENTS
A	15-2-88	AUTHY. NOTN. NO. BK 81-406

DRN		MATERIAL:- RING П.Р.Т 47 - 35 - 4.5. GOST 288-72 & GOST 15159-76
CHD		
TCD		
APPD		
DATE	02.6.86	
SCALE - 1 : 1		
DIMENSIONS IN mm.		
TOLERANCE ON DIMNS UNLESS OTHERWISE STATED.		
ALL THREADS CONFORM TO		

USED ON:- 13 (A) CB 3329 00 11

CONTROLLERATE OF INSPECTION (HEAVY VEHICLES) AVADI

TITLE:- RING

D S CAT NUMBER

DRAWING NUMBER 329 27 2

(A-8)

SIZE A3

DRAWING NUMBER
329 28 2

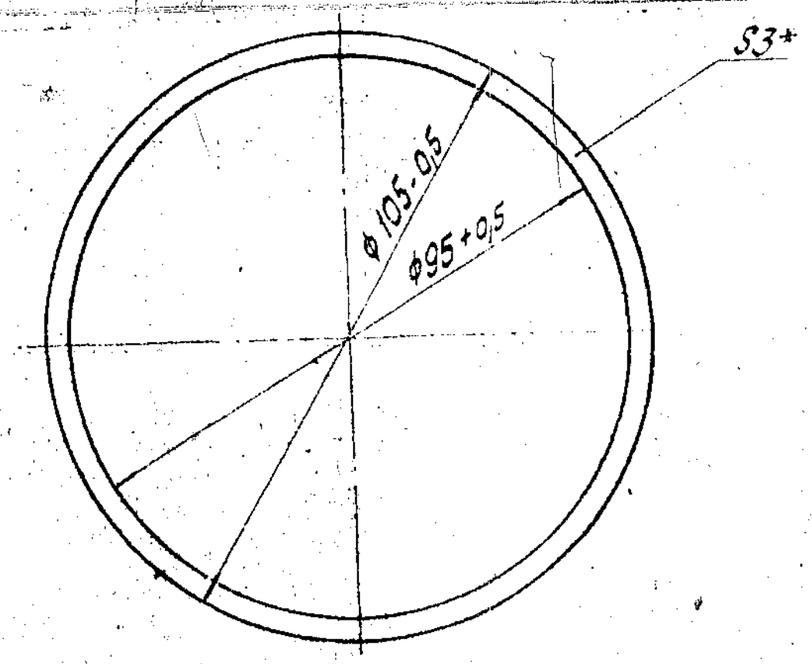

1. ALTERNATE MATERIAL : RUBBERIZED ASBESTOS GASKET ПМБ GOST 481-80.
2. IT IS ALLOWED TO MANUFACTURE THE COMPONENT FROM RUBBERIZED ASBESTOS FABRIC 2 mm, THICK.
3. * DIMENSION FOR REFERENCE.

EXPLANATORY NOTE:

4. (i) REFERENCE MATERIAL QUOTED:

PARONITE GASKET, GRADE ' ПОН' IN TROPICAL EXECUTION 'T' THICKNESS 2.0 (± 0.20)mm OR 3.0 (±0.25)mm TO GOST 481-80.

(ii) REFERENCE NOTE '1' ON ALTERNATE MATERIAL: PARONITE GASKET, GRADE ПМБ TO GOST 481-80.

a) WORKING MEDIUM - DIESEL:

		ПОН	ПМБ
1)	LIMITING PRESSURE	6.4 Kgf/cm²	2.5 Kgf/cm²
2)	LIMITING TEMPERATURE	200°C	200°C

b) PARAMETER:

1)	DENSITY	1.6 - 2.0 g/cm³	1.5 - 2.0 g/cm³
2)	CONVENTIONAL BREAKING POINT IN TRANSVERSE DIRECTION MIN	6.6 Kgf/cm²	13.0 Kgf/cm²
3)	INCREASE IN WEIGHT IN KEROSENE AT 23°C FOR 12 HOURS MAX	40	10 - 24
4)	COMPESSIBILITY AT 350 Kgf/cm²	8% - 20%	5% - 16%
5)	RECOVERY AFTER REMOVAL OF PRESSURE MIN	30%	35%

PILOT SAMPLE SHOULD BE APPROVED BY A H S P BEFORE BULK PRODUCTION

EST WT	TO BE STAMPED OR MARKED WHERE INDICATED THUS # (LETTERS)
0.008 Kg	

ALL SHARP EDGES AND CORNERS TO BE REMOVED UNLESS OTHERWISE STATED MACHINED CORNERS TO HAVE R OUTSIDE R INSIDE EQUIVALENT CHAMFERS ARE PERMISSIBLE

ISSUE	DATE	NATURE OF AMENDMENTS
A	15-2-88	AUTHY. NOTN. NO. BK 81-406

DRN	
CHD	
TCD	
APPD	
DATE	30-5-86
SCALE: 1 : 1	
DIMENSIONS IN mm	
TOLERANCE ON DIMNS UNLESS OTHERWISE STATED	
ALL THREADS TO CONFORM TO	

MATERIAL: RUBBERIZED ASBESTOS FABRIC ПОНТ 2.0 OR ПОНТ 3.0 GOST 481.80

USED ON: (A) СБ 3329-00-13

CONTROLLERATE OF INSPECTION (HEAVY VEHICLES) AVADI

TITLE: GASKET

D S CAT NUMBER

DRAWING NUMBER 329 28 2

(A-B)

SIZE A3

DRAWING NUMBER
329-29

Rz 80 (V)

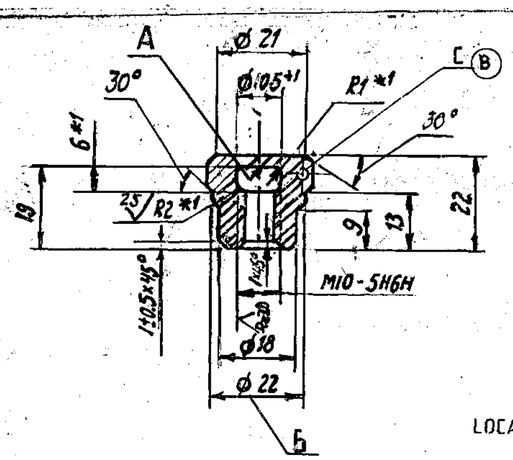

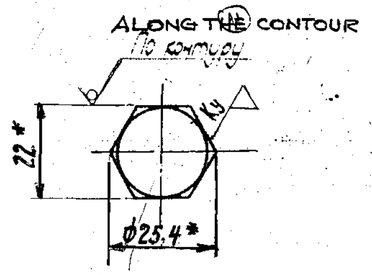

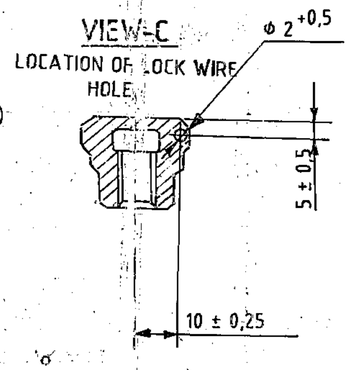

EXPLANATORY NOTE

(1.i) REFERENCE MATERIAL QUOTED
GAUGED HEXAGONAL STEEL BAR CLASS OF ACCURACY '4', 22·0(-0·14) mm A/F TO GOST 8560-78 FROM HIGH GRADE SIZED STEEL NORMAL SURFACE QUALITY TO GOST 1051-73 AND MANUFACTURED IN ACCORDANCE WITH QUALITY CARBON STRUCTURAL STEEL GRADE 45 TO GOST 1050-74

(ii) REFERENCE NOTE '1' ON ALTERNATE MATERIAL : QUALITY CARBON STRUCTURAL STEEL GRADES 40 AND 50 TO GOST 1050-74

a) CHEMICAL COMPOSITION : AS PER GOST 1050-74

GRADE OF STEEL	CONTENT OF ELEMENTS %						REMARKS
	C	Si	Mn	Cr	S	P	
				MAXIMUM			
45	0,42-0,50	0,17-0,37	0,50-0,80	0,25	0,040	0,035	REF MATL
40	0.37-0,45	0,17-0,37	0,50-0,80	0,25	0,040	0,035	ALT MATL
50	0,47-0,55	0,17-0,37	0,50-0,80	0,25	0,040	0,035	ALT MATL

RESIDUAL CONTENT OF COPPER AND NICKEL SHOULD NOT EXCEED 0,25% EACH

b) MECHANICAL PROPERTIES : AS PER GOST 1050-74

GRADE OF STEEL	ULTIMATE TENSILE STRENGTH Kgf/mm²	YIELD POINT Kgf/mm²	ELONGATION %	REDUCTION IN AREA %	IMPACT STRENGTH Kgfm/cm²	HARDNESS B H N MAX	REMARKS
45	61	36	16	40	5	229	REF MATL
40	58	34	19	45	6	217	ALT MATL
50	64	38	14	40	4	241	ALT MATL

1. ALTERNATE MATERIAL : STEEL, 40 AND 50, GOST 1050-74.
2. ROLLED STOCK, CLASS 4, GROUP 'B' GOST 1051-73 MAY BE USED. TO ENSURE HIGH QUALITY OF COATING, IT IS ALLOWED TO RECTIFY THE SURFACE THE SURFACE DEFECTS OF ROLLED STOCK WITH REDUCTION OF ITS SIZE AS PER ACCURACY CLASS 5.
3. UNSPECIFIED TOLERANCE OF DIMENSIONS FOR HOLES AS PER H14, FOR SHAFTS AS PER h 14 AND THE REST OF THE $\pm \frac{IT\,14}{2}$
4. DRILL MARK NOT EXCEEDING ϕ 3mm IS PERMITTED ON SURFACE A.
5. THERE MAY BE NO COATING ON INNER SURFACES.
6. (D) COATING Zn 3 Cr AS PER ~~ШЛ-104~~ ШЛ 483-82 WITH RELIEVING OF HYDROGEN EMBRITTLEMENT.
7. COATING Cd 9, CHROMATIZING IN ACCORDANCE WITH ~~ШЛ-104~~ ШЛ 569-84 (E) WITH ELIMINATION OF HYDROGEN EMBRITTLEMENT.
8. FLATS FROM HEXAHEDRON UP TO 2 mm WIDE ARE ALLOWED AT ϕ6
9. *DIMENSIONS FOR REFERENCE.
10. *1 DIMENSIONS SHOULD BE ENSURED BY TOOL.

(E) EQUIVALENT MATERIAL STEEL 45C8 TO IS:1570

PILOT SAMPLE SHOULD BE APPROVED BY A H S P BEFORE BULK PRODUCTION

EST WT	TO BE STAMPED OR MARKED WHERE INDICATED THUS # (LETTERS)
0.045 Kg	

ALL SHARP EDGES AND CORNERS TO BE REMOVED UNLESS OTHERWISE STATED MACHINED CORNERS TO HAVE R OUTSIDE R INSIDE EQUIVALENT CHAMFERS ARE PERMISSIBLE.

ISSUE	DATE	NATURE OF AMENDMENTS
E	12-8-10	4th Alt. Comm. Meeting Minutes Point No.11 Dt: 26-10-09
D	06.4.86	AUTHY NOTN No BK 82-207
C	06.4.88	AUTHY NOTN No. BK 85-141
B	06.4.88	AUTHY NOTN NO BK 84-676
A	15-2-88	AUTHY. NOTN. NO. BK 81-1406

DRN
CHD
TCD
APPD
DATE 28-5-86
SCALE: 1 : 1
DIMENSIONS IN mm
TOLERANCE ON DIMNS UNLESS OTHERWISE STATED IS: 2102-69
ALL THREADS TO CONFORM TO

MATERIAL: HEXAGON BAR 22.4 GOST 8560-7 45-Б GOST 1051-73

USED ON: СБ 20-29-00-8 13 СБ 3329 00 11 (A)

CONTROLLERATE OF INSPECTION (HEAVY VEHICLES) AVADI

TITLE: CLAMPING NUT

D S CAT NUMBER

DRAWING NUMBER 329-29

(A8)

SIZE A2

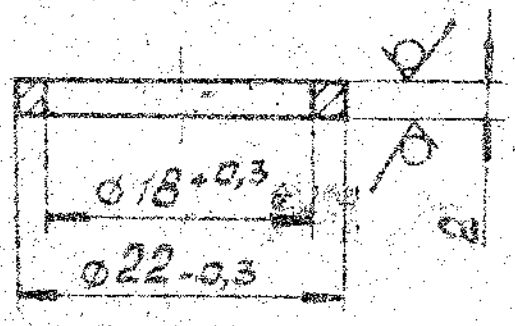

1. ALTERNATE MATERIAL IS COPPER M2 AND, M3, GOST 859-78.

2. ANNEAL.

USED ON
* СБ 20-29-08-8

25/40

PILOT SAMPLE SHOULD BE APPROVED BY A H S P BEFORE BATCH PRODUCTION

	EST. MASS 0,0029 Kg	
	SCALE 2 : 1	M1 GOST 859-78

СБ 20-06-09-2
СБ 20-29-00-8 *

GASKET

329-30

10/9/87

329-32-1

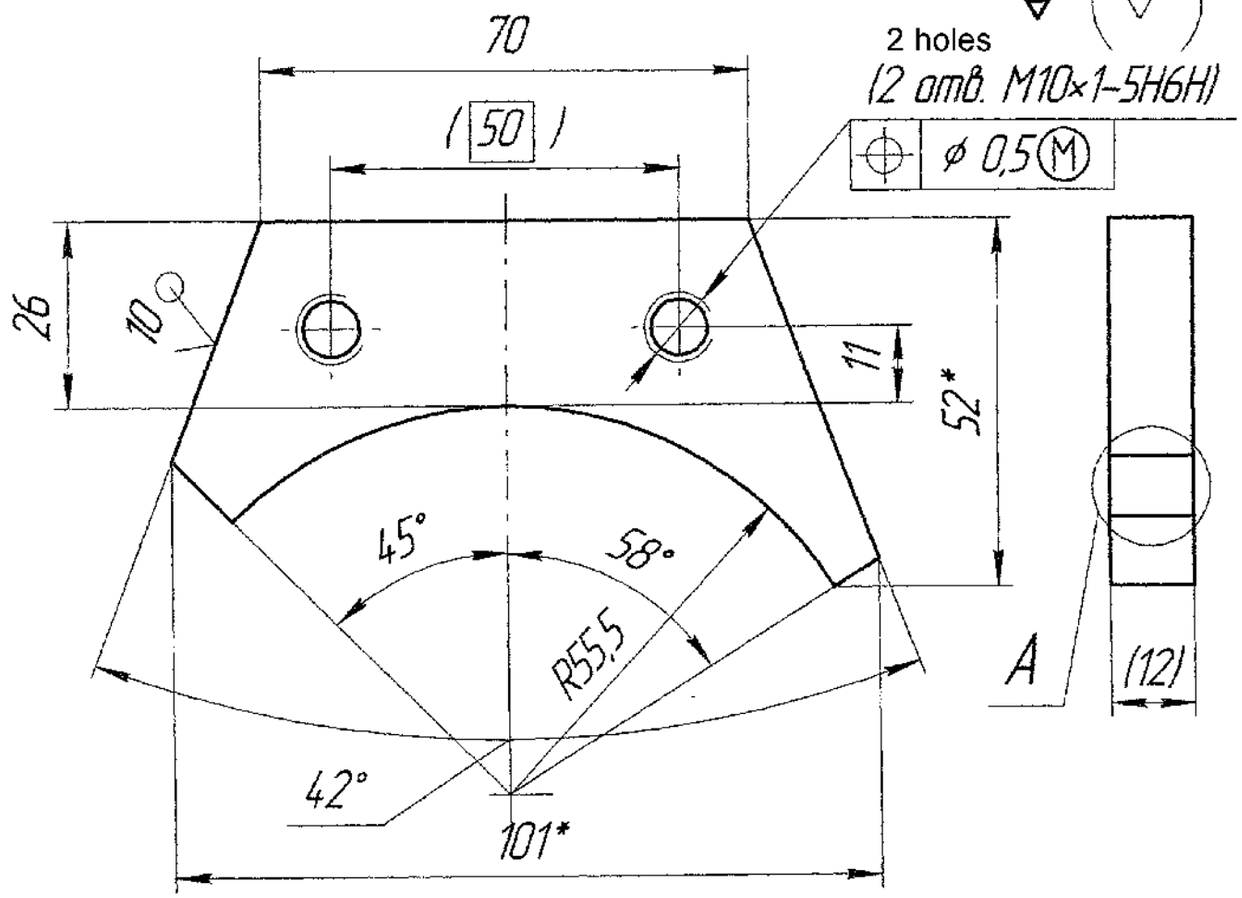

Code	Figure
Обозначение	Рис.
329-32-1	1
-01	2

Fig. 1
Рис.1

A

Fig. 2
Рис.2

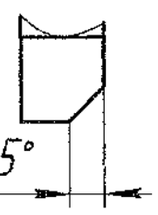

5max×45° 5max×45°

1. Размеры в скобках-после сборки.
2. Неуказанные предельные отклонения размеров ±0,5мм.
3. * Размеры для справок.

1. Dimensions in brackets - after welding.
2. Unspecified limit deviations of dimensions : ± 0.5 mm.
3. * Dimensions for reference

Изм	Лист	№ докум.	Подп.	Дата
1	Зам.	2001-307		

Trans. & Ckd. by : M/s SWYAZ
Authenticated by :
Approved by :
Engine Factory, Avadi

329-32-1

SELF
Полка
GOST

Лит.	Масса	Масштаб
0,1	Weight 0,4	Scale 1:1
Лист	Листов 1	
Sheet	Sheets	

SHEET. Б-ПН-16 ГОСТ 19903-74
Лист 345-09Г2С-св ГОСТ 19281-89

F15
108

Подп. и дата
Инв. № дубл.
Взам. инв. №
Подп. и дата
Инв. № подл. 44785

DRAWING NUMBER
329-33-2

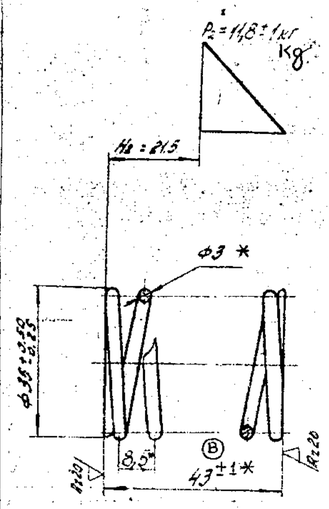

1. DIRECTION OF SPRING COILING R.H.
2. n = 4.5 (WORKING COILS).
3. n_1 = 6.5 ± 0.5 (TOTAL MEMBER OF COILS).
4. VARIATION IN PITCH OF WORKING COILS SHOULD NOT EXCEED 0.5mm.
5. NON-SQUARENESS OF GROUND FACES RELATIVE TO THE AXIS OF SPRING SHOULD NOT EXCEED 0.8 mm ON SPRING LENGTH.
6. EXTERNAL DIAMETER OF END COILS MAY BE INCREASED TO 36 mm, maximum.
7. GAP BETWEEN THE COMPRESSED COILS SHOULD NOT EXCEEDZO.3 mm.
8. LENGTH OF ARC OF MACHINED SURFACE OF END COILS SHOULD NOT BE LESS THAN 0.65 OF CIRCUMFERENCE LENGTH.
9. AFTER COIL-TO-COIL COMPRESSION THE SPRING SHOULD NOT HAVE ANY RESIDUAL DEFORMATION.
10. COATING: GLYPTAL VARNISH ГФ -95 GOST 8018-70 IN ACCORDANCE WITH (C) ~~U.1 09-73.~~ U.1 628-86
11. VARNISH OVERLAPS AS WELL AS ABSENCE OF VARNISH ARE ALLOWED. AT PLACES END COIL FITTING; OVER LAPS OF VARNISH ON SPRING END FACE AT PLACES OF CONTACT WITH FIXTURE ARE ALLOWED. TO BE ACCEPTED AS PER STANDARD.
12. * DIMENSIONS FOR REFERENCE.

EXPLANATORY NOTE:

B. REFERENCE MATERIAL QUOTED :

CARBON STEEL COLD DRAWN WIRE CATAGORY II, DIAMETER 3 mm (±0.03) NORMAL ACCURACY AS PER GOST 9389-75 AND MANUFACTURED IN ACCORDANCE WITH GRADE 70 OF GOST 1050-74.

a) CHEMICAL COMPOSITION AS PER GOST 1050-74

GRADE OF STEEL	CONTENT OF ELEMENTS %					
	C	Si	Mn	Cr	S	P
				MAXIMUM		
70	0.67 - 0.75	0.17 - 0.37	0.50 - 0.80	0.25	0.040	0.035

RESIDUAL CONTENT OF COPPER AND NICKEL SHOULD NOT EXCEED 0.25 % EACH.

b) MECHANICAL PROPERTIES AS PER GOST 9389-75.

ULTIMATE TENSILE STRENGTH Kgf/mm²	No. OF BENDS (Min)	No. OF TWISTS (Min)
165 - 190	5	13

(D) EQUIVALENT MATERIAL
Gr. DH/DM IS:4454-2001

PILOT SAMPLE SHOULD BE APPROVED BY A H S P BEFORE BULK PRODUCTION.

EST. MASS	TO BE STAMPED OR MARKED WHERE INDICATED THUS # (LETTERS)
0.04 Kg	

ALL SHARP EDGES AND CORNERS TO BE REMOVED UNLESS OTHERWISE STATED MACHINED CORNERS TO HAVE R OUTSIDE R INSIDE EQUIVALENT CHAMFERS ARE PERMISSIBLE.

ISSUE	DATE	NATURE OF AMENDMENTS
D	16-8-10	4th Alt.Comm.Meeting Minutes Point No.13 Dt:26-10-09
C	6-2-94	AUTHY.NOTN.NO. 88-259.
B	26-9-93	AUTHY. NOTN. No. BK90-328.
A	15-2-83	AUTHY. NOTN. NO. BK 81-406

DRN
CHD
TCD
APPD
DATE 02.6.86
SCALE - 1 : 1
DIMENSIONS IN mm.
TOLERANCE ON DIMNS UNLESS OTHERWISE STATED.
ALL THREADS CONFORM TO

MATERIAL:- WIRE II - 3 GOST 9389-75

USED ON:- CG 20-29-00-8
CG 3329 00 13 (A)

CONTROLLERATE OF INSPECTION (HEAVY VEHICLES) AVADI

TITLE:- SPRING

D S CAT NUMBER

DRAWING NUMBER 329-33-2

(A 8) SIZE A2

DRAWING NUMBER
329-34-3

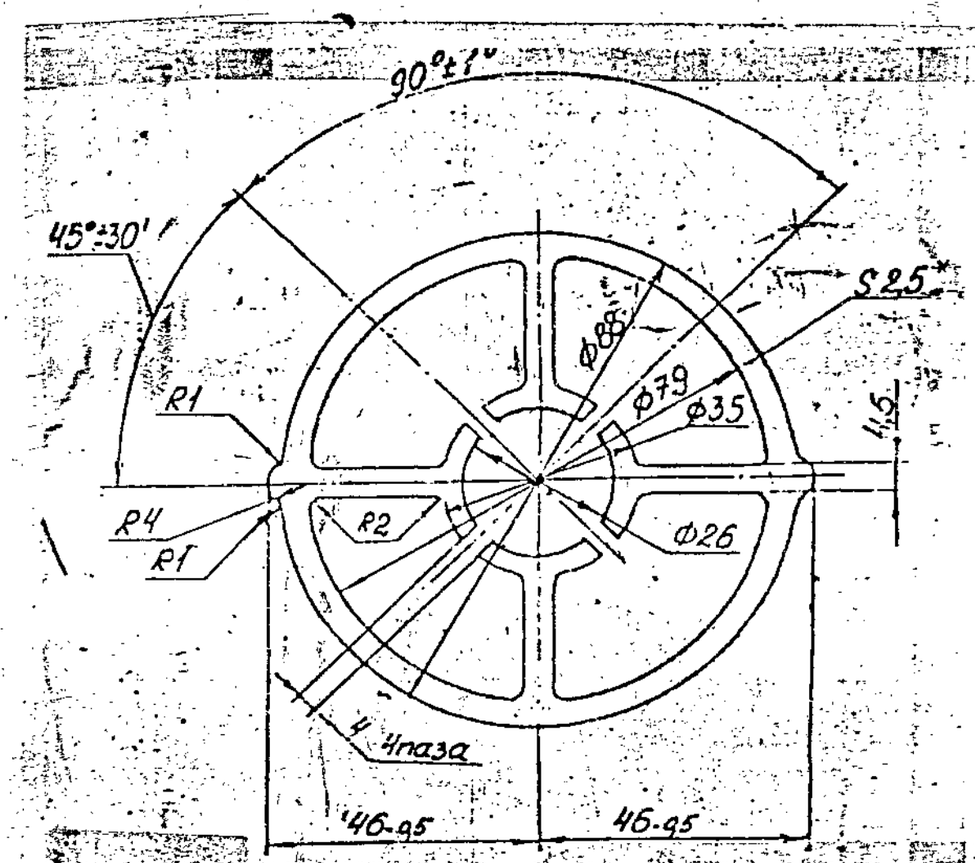

EXPLANATORY NOTE:

MATERIAL QUOTED: GASKET BOARD Б 2-5 GOST 9347-74.

CARD BOARD & CARD BOARD GASKETS INTENDED FOR GASKETS FOR FLANGES AND OTHER JOINTS.

Б = B = UNIMPREGNATED: 2·5 +0·25 = THICKNESS OF CARDBOARD.

TECHNICAL REQUIREMENTS:

1. FIBRE COMPOSITION %
   a) UNBLEACHED CONIFEROUS SULPHATE PULP OF GRADE HC2 (NS-2) = 27 (MIN)
   b) WASTE PAPER OF GRADE MC-1 (MS) AND MC-5 (MS) = 73 (MIN).
2. WEIGHT PER UNIT VOLUME g/cm³ = 0·75 (MIN).
3. ABSORPTIVITY AFTER 6 HOURS OF COMPLETE IMMERSION % IN WATER = 120
4. ULTIMATE TENSILE STRENGTH IN TRANSVERSE DIRECTION IN kgf/mm² = 1·6 (MIN)
5. LINEAR DEFORMATION IN TRANSVERSE DIRECTION AFTER HOLDING THE SAMPLE IN HYDROSTAT FOR 24 HOURS % = 0·8 (MIN).
6. MOISTURE CONTENT % = 10±2
7. CARD BOARD SHOULD HAVE NATURAL FIBRE COLOUR.

1. *COARSE FLUFFINESS AND TEAR-OUTS ARE NOT ALLOWED ALONG THE CONTOUR.*
2. *UNSPECIFIED TOLERANCES OF DIMENSIONS ±0.5mm.*
3. ** DIMENSION FOR REFERENCE.*

⊕ ALT. MATERIAL Ⓐ
POLYAMIDE ПА6-21 SECONDARY
OST 6-06-C4-79

DRAWING INDIANISED BASED ON RUSSIAN ORIGINAL
ISSUE No:2 (BK 84-179).

PILOT SAMPLE SHOULD BE APPROVED BY A H S P BEFORE BULK PRODUCTION

EST. WT. 0.005 Kg

TO BE STAMPED OR MARKED WHERE INDICATED THUS # (LETTERS)

ALL SHARP EDGES AND CORNERS TO BE REMOVED UNLESS OTHERWISE STATED MACHINED CORNERS TO HAVE R OUT SIDE R INSIDE EQUIVALENT CHAMFERS ARE PERMISSIBLE.

ISSUE	DATE	NATURE OF AMENDMENTS
A	14-11-94	AUTHY: LT. No. 90241/ AHSP/ENG DT. 13-9-94

DRN
CHD
TCD
APPD
DATE 2-6-89
SCALE:- 1 : 1
DIMENSIONS IN mm
TOLERANCE ON DIMNS UNLESS OTHERWISE STATED IS:2102-69
ALL THREADS TO CONFORM TO

MATERIAL:- ⊕ GASKET BOARD Б 2.5 Ⓐ GOST 9347-74.

USED ON C6 329-61-1

CONTROLLERATE OF QUALITY ASSURANCE(HEAVY VEHICLES) AVADI

TITLE
OUTLET DISTANCE PIECE

D S CAT NUMBER

DRAWING NUMBER 329-34-3

SIZE A3

DRAWING NUMBER

СБ 329 08 6

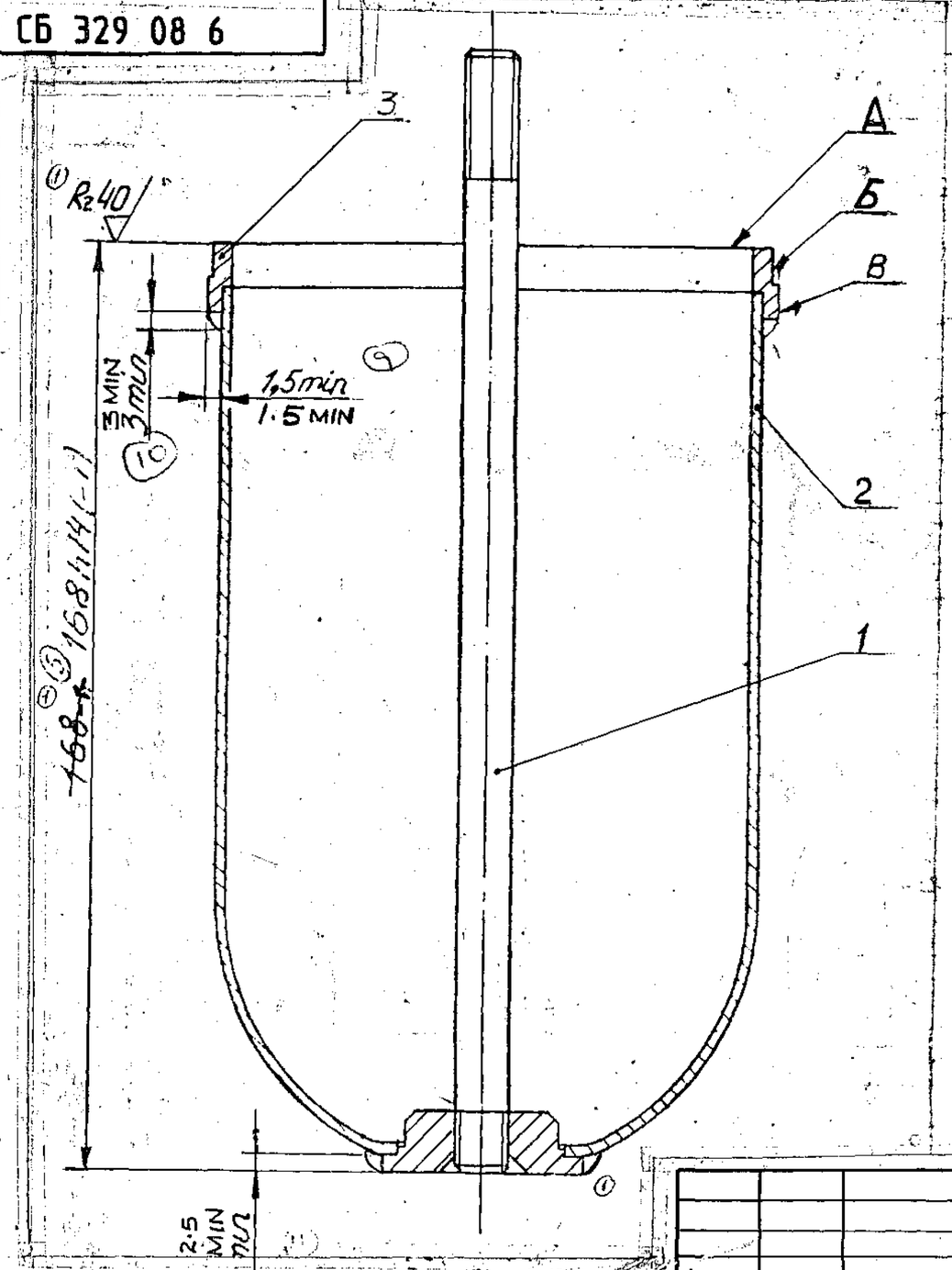

1. NON-SQUARENESS OF SURFACE A RELATIVE TO THE AXIS OF BOWL SHOULD NOT EXCEED 0.4 mm. (TO BE ENSURED BY TOOL).
2. NON-FLATNESS OF SURFACE A SHOULD NOT EXCEED 0.16 mm.
3. ECCENTRICITY OF SURFACE Б RELATIVE TO THE STUD SHOULD NOT EXCEED 0.5 mm. (MMC).
4. COATING : BAKELITE ЛБС-1 IN ACCORDANCE WITH ЦЛ-10-73 IN TWO LAYERS.
5. THERE SHOULD NOT BE ANY BAKELITE ON THREAD AND ON SURFACE A.
6. BOWL SHOULD BE PRESSURE-TESTED BY AIR AT A PRESSURE OF 4 ... 5 kgf/cm^2 IN WATER BATH.
7. ELECTRIC ARC WELDING ELECTRIC-ARC WELDING IN AN ATMOSPHERE OF SHIELDING GAS IS ALLOWED.
8. PROJECTION OF WELD BEYOND SURFACE B SHOULD NOT EXCEED 0.5 mm.

PILOT SAMPLE SHOULD BE APPROVED BY A H S P BEFORE BULK PRODUCTION

EST WT	TO BE STAMPED OR MARKED WHERE INDICATED THUS # (LETTERS)
1.086 Kg	

ALL SHARP EDGES AND CORNERS TO BE REMOVED UNLESS OTHERWISE STATED MACHINED CORNERS TO HAVE R OUT-SIDE R INSIDE EQUIVALENT CHAMFERS ARE PERMISSIBLE

ISSUE	DATE	NATURE OF AMENDMENTS
A	15-2-88	AUTHY. NOTN. NO. BK 81-406

DRN		MATERIAL: —	USED ON: СБ 329 00 11 13 (A)
CHD			
TCD			
APPD		CONTROLLERATE OF INSPECTION (HEAVY VEHICLES) AVADI	
DATE	30-5-86		
SCALE: 1 : 1			
DIMENSIONS IN mm		TITLE: SUB ASSY FILTER BOWL	
TOLERANCE ON DIMNS UNLESS OTHERWISE STATED IS : 2102-69			
ALL THREADS TO CONFORM TO		D S CAT NUMBER	DRAWING NUMBER СБ 329 08 6

(A-8)

SIZE A3

USED ON

CB 329 00 13 (A)

ITEM	DRAWING NUMBER	D S CAT NUMBER	DESCRIPTION	NO OFF	REMARKS
	CB 329 08 6		SUB ASSY - FILTER BOWL	1	
	& ITEM LIST				
1	CB 329 03 7		SUB ASSY COUPLING STUD	1	
	& ITEM LIST				
2	329 24 3		FILTER BOWL	1	
3	329 56		RING	1	

ISSUE	DATE	NATURE OF AMENDMENTS	ISSUE	DATE	NATURE OF AMENDMENTS
A	15-2-88	AUTHY. NOTN. NO. BK 81-406			

DRN		CONTROLLERATE OF INSPECTION (HEAVY VEHICLES) AVADI		
CHD		TITLE SUB ASSY - FILTER BOWL		
TCD				
APPD		SHT NO 1 OF 1	D S CAT NUMBER	ITEM LIST FOR CB 329 08 6
DATE	02.6.86			

Format Формат	Zone Зона	Item Поз.	Code Обозначение	Nomenclature Наименование	Qty. Кол.	Remark Примечание
				Documentation		
				Документация		
				Assembly Drawing		
A2			сб. 329-58-2СБ	Сборочный чертёж		
				Parts		
				Детали		
A4		2	329-59-1 Rib	Ребро	1	
A4		3	329-60-1 Rib	Ребро	1	
A4		4	329-76-1 Plate	Планка	1	
			Variable date for modification			
			Переменные данные	для исполнений		
				Сб.329-58-2		
			Sheet	Лит. 0_1		
				Parts		
				Детали		
A4		1	329-32-1 Self	Полка	1	
A1		5	329-77 Support	Стойка	1	

Подп. и дата

Инв. № дубл.

Взам. инв. №

Подп. и дата

Инв. № подл. 44826

Trans. & Ckd. by : M/s SWYAZ	Подп.	Дата	сб.329-58-2	Letter Лит.	Sheet Лист	Sheets Листов
Authenticated by :			BRACKET Кронштейн	- - -	1	3
Approved by :				Р 5/100	Р/5	
Engine Factory, Avadi						

Format Формат	Zone Зона	Поз. Item	Code Обозначение	Nomenclature Наименование	Qty. Кол.	Remark Примечание
				Сб.329-58-2-01		
			Sheet	Лит.O_1		
				Parts		
				Детали		
A4		1	329-32-1-01 Self	Полка	1	
A1		5	329-77-01 Support	Стойка	1	

Trans. & Ckd. by :
M/s SWYAZ

Authenticated by :

Approved by :

Engine Factory, Avadi

Подп.	Дата

Сб.329-58-2

Sheet

Лист 2

Подп. и дата | Инв. № дубл. | Взам. инв. № | Подп. и дата | Инв. № подл.

MODIFICATION RECORD SHEET

Mod.	Number of Sheets (Pages)				Total Sheets (Pages) In document	Doc. No.	Incoming No. of attached document & date.	Signature	Date
	To be modified	To be replaced	New	Withdrawal					
1						2001-307			

Signature & date	
Duplicate Inv. No.	
Interchg. Inv. No.	
Signature & date	
Original Inv. No.	

Mod.	Sheet	Document. No.	Signature	Date	CO.329-58-2	Sheet
						3

Copied by Format A 4

СБ 329-61-1СБ (1) ЕСКД

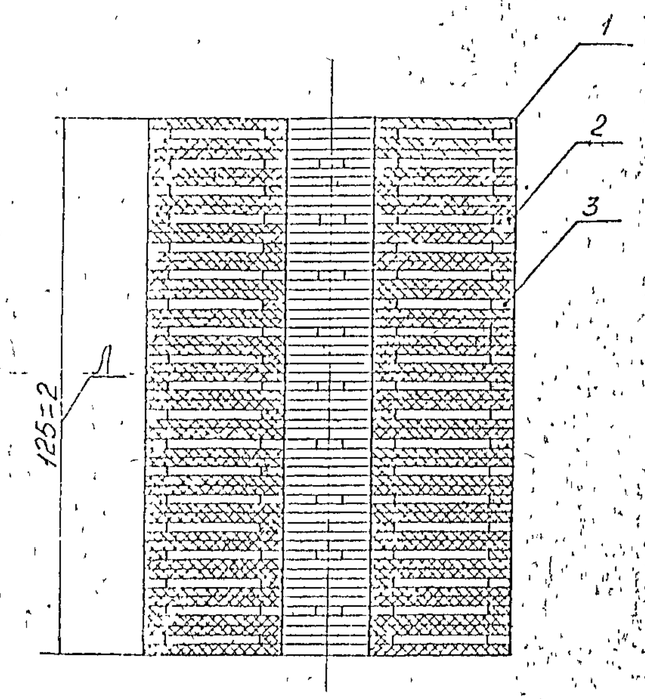

1. Чередование входных поз.3 и выходных поз.2 проставок должно соответствовать чертежу, при этом первой должна устанавливаться деталь поз. 1.

2. Набор пластин пакета склеить дисперсией поливинилацетатной ГОСТ 18992-73.

① 3. ~~Склейку пакета производить на оправке диаметром 21-0,5мм.~~ Выступы проставок располагать в одной плоскости. При необходимости оправку смазать маслом, применяемым для смазки изделия.

4. Двойные пластины поз.1 склеить двумя поясками шириной 3+2 мм, расположенными по наружному и внутреннему диаметрам пластины.

5. Проставки поз. 2 и 3 перед установкой опустить в поливинилацетатную дисперсию и при необходимости выдержать 1-2 мин. для стока дисперсии.

6. Собранный пакет сжать до размера А и выдержать в сжатом состоянии не менее 30 мин. При сжатии пластин выступающую дисперсию удалить салфеткой.

7. Допускается добавлять две пластины поз. 1 и одну проставку поз. 2.

① 8. Допуск соосности поз. 1, 2, 3 относительно общей оси 1мм в диаметральном выражении, обеспеч. инструментом.

(1)

1) ALTERNATION OF INLET AND OUTLET DISTANCE PIECES SHOULD COMPLY WITH THE DRAWING, IN THIS CASE COMPONENT, 1 SHOULD BE INSTALLED FIRST.

2) SET OF STACK PLATES SHOULD BE GLUED WITH POLYVINYL ACETATE DISPERSION IN ACCORDANCE WITH GOST 18992-73

3) PROJECTIONS OF DISTANCE PIECES SHOULD BE POSITIONED IN ONE PLANE, IF NECESSARY THE MANDREL MAY BE LUBRICATED WITH OIL

4) DOUBLE PLATES, 1 SHOULD BE GLUED BY TWO RINGS 3^{+2} mm WIDE POSITIONED ALONG THE OUTER AND INNER DIAMETER OF PLATES

5) DISTANCE PIECES , 2 AND 3 BEFORE MOUNTING SHOULD BE IMMERSED IN POLYVINYL ACETATE DISPERSION AND IF NECESSARY, KEPT FOR 1 OR 2 MINUTES , FOR DISPERSION DRAINING

6) ASSEMBLED STACK SHOULD BE COMPRESSED TO DIMENSION A AND KEPT IN THE COMPRESSED CONDITION FOR NOT LESS THAN 30 MINUTES , DURING COMPRESSION OF PLATES, SQUEEZED OUT DISPERSION SHOULD BE REMOVED BY CLOTH

7) TWO PLATES, 1 AND ONE DISTANCE PIECE MAY BE ADDED

8) TOLERANCE ON MISMATCHING OF CAM PLATES 1, 2, 3, RELATIVE TO COMMON AXIS IS 1MM DIAMETRICALY AND IS TO BE ENSURED BY TOOL

2.	1	ВК84-179
1*	2.	ВК81-408
1	1166	02-023
Изм.	Лист	№ докум.

PILOT SAMPLE SHOULD BE APPROVED BY A H S P BEFORE BULK PRODUCTION

			EST. MASS 0,24 Kg	TO BE STAMPED OR MARKED WHERE INDICATED THUS # LETTERS
			ALL SHARP EDGES AND CORNERS TO BE REMOVED UNLESS OTHERWISE STATED MACHINED CORNERS TO HAVE R OUTSIDE R INSIDE EQUIVALENT CHAMFERS ARE PERMISSIBLE	
ISSUE	DATE	NATURE OF AMENDMENTS	MATERIAL - —	USED ON - СБ 329-05-7
DRN		SCALE: 1:1	CONTROLLERATE OF QUALITY ASSURANCE(HEAVY VEHICLES) AVADI	
CHD		DIMENSIONS IN mm		
TCD		TOLERANCE ON DIMNS UNLESS OTHERWISE STATED	TITLE STACK ASSY	
APPD				
DATE 5.2.80		ALL THREADS TO CONFORM TO	D S CAT NUMBER	DRAWING NUMBER СБ 329-61-1СБ

USED ON СБ 329-05-7

ITEM LIST CREATED BASED ON RUSSIAN ORIGINAL ISSUE 2 (BK 84-179)

EDITION	ITEM	DRAWING NUMBER	D S CAT NUMBER	DESCRIPTION	NO OFF	REMARKS
		СБ 329-61-1 Сб		STACK ASSY		
		& ITEM LIST				
	1	329-25-2		FILTER PLATE	38	
	2	329-34-3		OUTLET PLATE	9	
	3	329-37-2		INLET PLATE	10	

ISSUE	DATE	NATURE OF AMENDMENTS	ISSUE	DATE	NATURE OF AMENDMENTS

DRN		CONTROLLERATE OF QUALITY ASSURANCE (HEAVY VEHICLES) AVADI		
CHD		TITLE	STACK ASSY	
TCD				
APPD		SHT No 1 OF 1	D S CAT NUMBER	ITEM LIST FOR СБ 329-61-1СБ
DATE	3/2/88			

СБ 329-69-1 | 1

ECKA

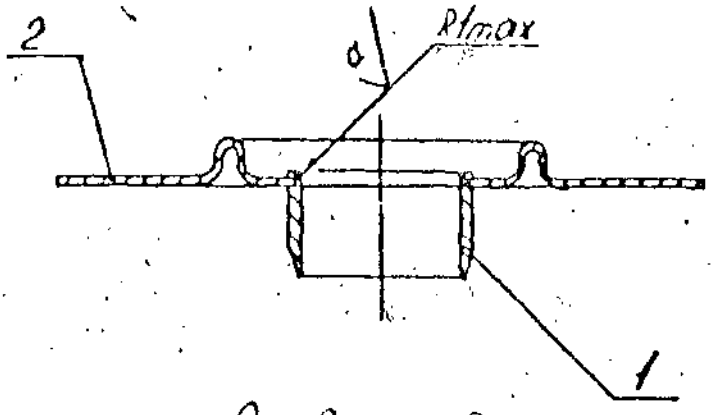

$\sqrt{x} = \sqrt{40}$ Развальцевать
TO BE ROLLED OUT.

PILOT SAMPLE SHOULD BE APPROVED BY A H S P BEFORE BULK PRODUCTION

			EST. MASS 0.052 Kg.	TO BE STAMPED OR MARKED WHERE INDICATED THUS # (LETTERS)
			ALL SHARP EDGES AND CORNERS TO BE REMOVED UNLESS OTHERWISE STATED MACHINED CORNERS TO HAVE R OUTSIDE R INSIDE EQUIVALENT CHAMFERS ARE PERMISSIBLE	
ISSUE	DATE	NATURE OF AMENDMENTS	MATERIAL: —	USED ON:- СБ 329-05-7
DRN MG		SCALE: 1 : 1	CONTROLLERATE OF QUALITY ASSURANCE(HEAVY VEHICLES) AVADI	
CHD		DIMENSIONS IN mm		
TCD MG		TOLERANCE ON DIMNS UNLESS OTHERWISE STATED	TITLE: PRESSURE FLANGE ASSY	
APPD				
DATE 3/2/88		ALL THREADS TO CONFORM TO	D S CAT NUMBER	DRAWING NUMBER СБ 329-69-1

DRG. MODIFIED BASED ON RUSSIAN ORIGINAL ISSUE 2 (BK 85-610)

FAC 33-683

USED ON	ITEM	DRAWING NUMBER	D S CAT NUMBER	DESCRIPTION	No OFF	REMARKS
CB 329-05-7		Cb 329-69-1		PRESSURE FLANGE ASSY.	1	
		& ITEM LIST.				
	1	329-11-6		BUSHING	1	
	2	329-13-9		PLATE	1	

ISSUE	DATE	NATURE OF AMENDMENTS	ISSUE	DATE	NATURE OF AMENDMENTS

DRN	lg	CONTROLLERATE OF QUALITY ASSURANCE (HEAVY VEHICLES) AVADI
CHD	[illegible]	TITLE: PRESSURE FLANGE ASSY.
TCDI	lg	
APPD	[illegible]	SHT. No. 1 OF 1 / D S CAT NUMBER / ITEM LIST FOR Cb 329-69-1
DATE	3/2/88	

ITEM LIST CREATED BASED ON RUSSIAN ORIGINAL ISSUE 2 (BK 85-610)

Format Формат	Zone Зона	Поз. Item	Code Обозначение	Nomenclature Наименование	Qty. Кол.	Remark Примечание
				Documentation		
				Документация		
				Assembly Drawing		
A2			сб.329-75-1СБ	Сборочный чертеж		
				Assembly units		
				Сборочные единицы		
A4		1	сб.329-00-7 Fine filter of fuel	Фильтр тонкой	2	
				очистки топливный		
A4		2	сб.329-58-2 Bracket	Кронштейн	1	
A4		3	сб.329-58-2-01 Bracket	Кронштейн	1	
				Parts		
				Детали		
A4		5	351-50 Nut	Гайка М10	6	
A4		6	356-29 Bolt	Болт М10×34	4	

Подп. и дата | Инв. № дубл. | Взам. инв. № | Подп. и дата | Инв. № подл. 44835

1	–	2001-298		
Trans. & Ckd. by : M/s SWYAZ			Подп.	Дата
Authenticated by :				
Approved by :				
Engine Factory, Avadi				

Installation of fine filter of fuel

сб.329-75-1

Установка фильтра тонкой очистки топливного

Letter Лит.	Sheet Лист	Sheets Листов
0,1	1	2

АБ 104

Format Формат	Zone Зона	Поз.	Item	Code Обозначение	Nomenclature Наименование	Qty. Кол.	Remark Примечание
					Standard articles		
					Стандартные изделия		
A4		10	353-26	Spring washer	Шайба пружинная 10Т 65Г	10	
				GOST	ГОСТ 6402-70		

Подп. и дата

Инв. № дубл.

Взам. инв. №

Подп. и дата

Инв. № подл.

Trans. & Ckd. by :
M/s SWYAZ

Authenticated by :

Approved by :

Engine Factory, Avadi

Подп.	Дата

Sheet

сб.329-75-1

Лист 2

A15 / 105

сб.329-75-1СБ

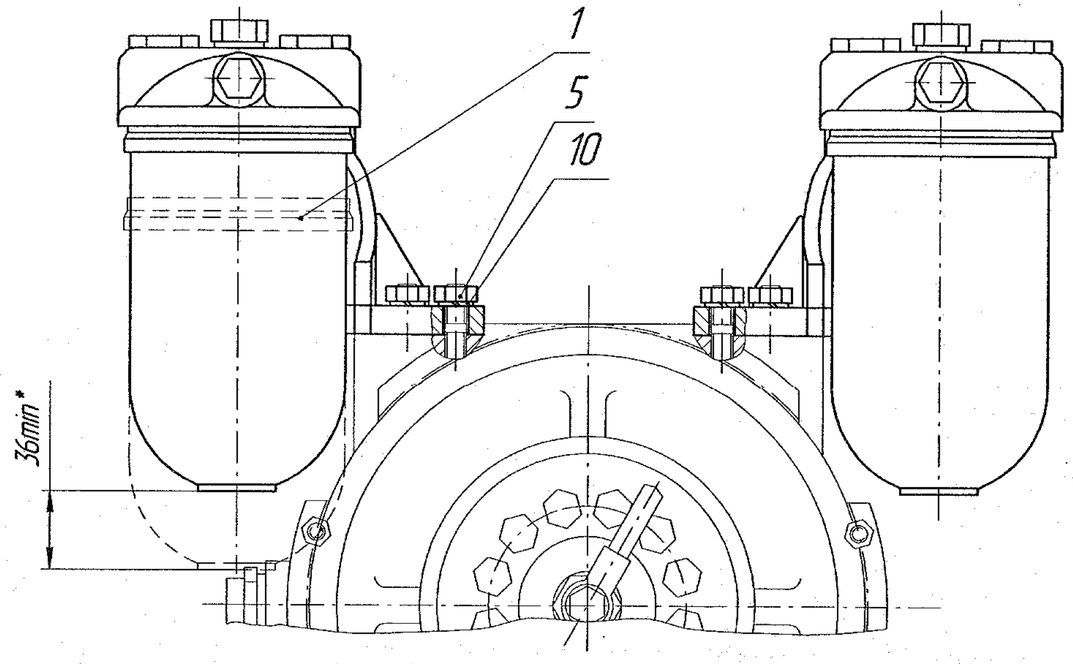

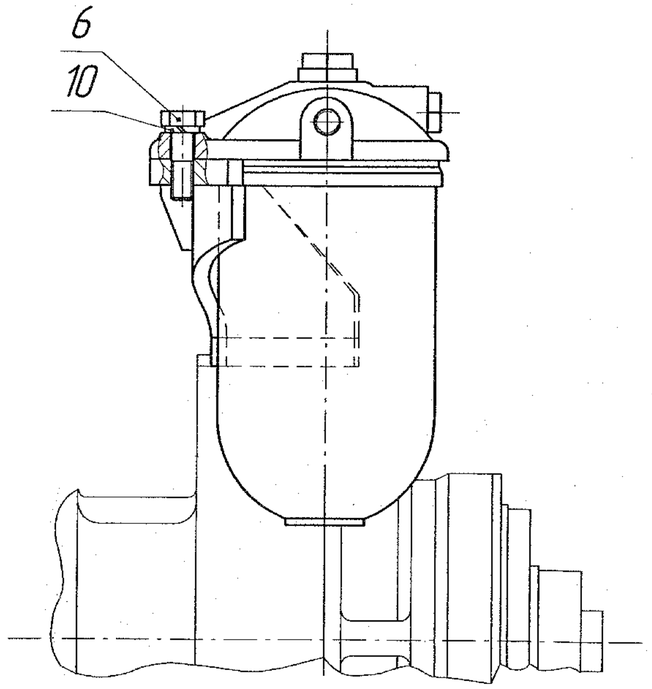

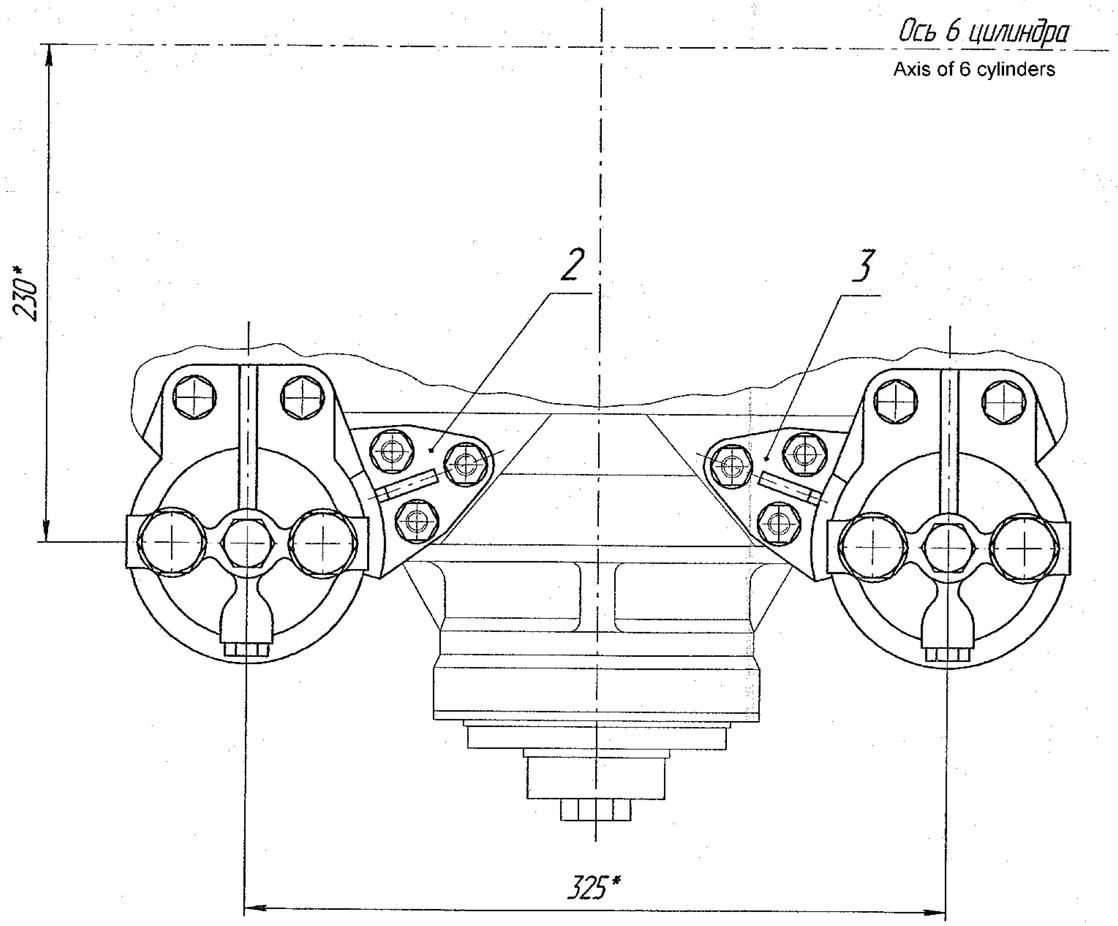

1. * Размеры для справок

1. * Dimensions for reference.

1	-	2001-298			сб.329-75-1СБ		
Изм.	Лист	№ докум.	Подп.	Дата	Установка фильтра тонкой очистки топливного Сборочный чертёж	Лит. 0₁	Масса Weight / Масштаб Scale 1:2
Trans. & Ckd. by : M/s SWYAZ						Лист	Листов 1
Authenticated by :					Installation of fine filter of fuel Assembly Drawing	Sheet	Sheets
Approved by :							
Engine Factory, Avadi							

Формат А2

Инв. № подл. 44836 | Подп. и дата | Взам. инв. № | Инв. № дубл. | Подп. и дата

сб.329-01-7

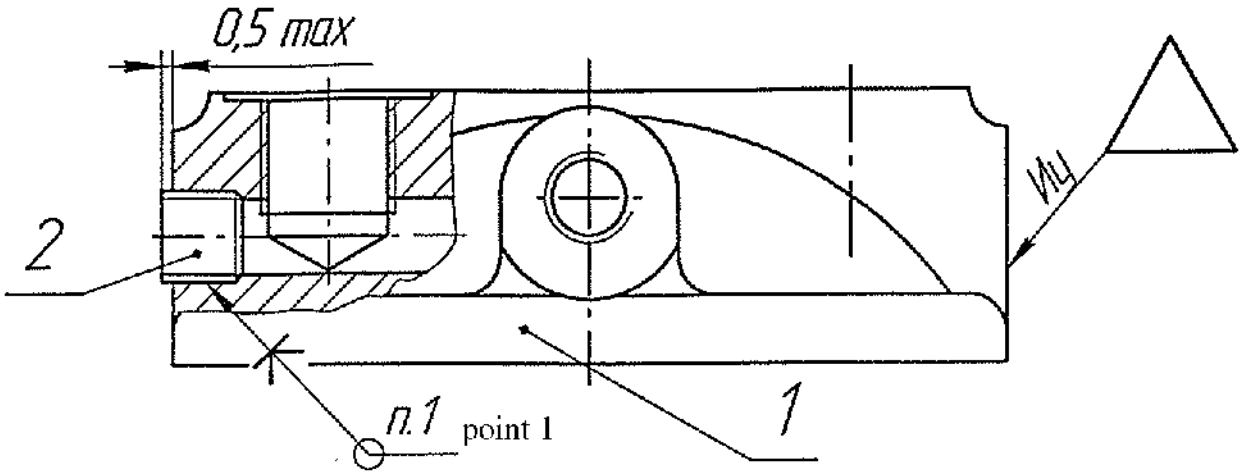

1. Герметик анаэробный Анатерм-5МД ТУ 2257-339-00208947-2000 по ИЛ-652-86.

2. Сборочная единица должна быть герметичной. Испытать воздухом под давлением (0,5±0,05)МПа [(5±0,5)кгс/см^2] в водяной ванне в течение 2 мин., не менее. Пропуск воздуха по резьбовому соединению не допускается.

1. Sealing compound anaerobic Anaterm-5МД ТУ 2257-339-00208947-2000 as per ИЛ-652-86.
2. Assembly units should be airtight. Check by air at pressure (0.5±0.05) MPa [(5±0.5) kgf/cm2] in water bath for 2 minutes minimum. Passing of air on threaded joints is not permitted.

Формат / Format	Зона / Zone	Поз. / Items	Code / Обозначение	Nomenclature / Наименование	Кол. / Qty.	Примечание / Remark
				Parts		
				Детали		
				Filter cover		
A1		1	329-09-4	Крышка фильтра	1	
A4		2	356-62-4	Заглушка Plug	1	

4		516-06		

сб.329-01-7

Trans. & Ckd. By:
M/s Swyaz
Authenticated By:

Approved By:
Engine Factory, Adavi

FILTER COVER
Крышка фильтра
Сборочный чертеж
Assembly drawing

Letter / Лит.	Weight / Масса	Scale / Масштаб
	1,22	1:1
Лист / Sheet	Листов / Sheets	1

44629

47469

Копировал Формат A4

сб.329-58-2СБ

сб.329-58-2 – изображено represented

сб.329-58-2-01 – зеркальное отражение

mirror image

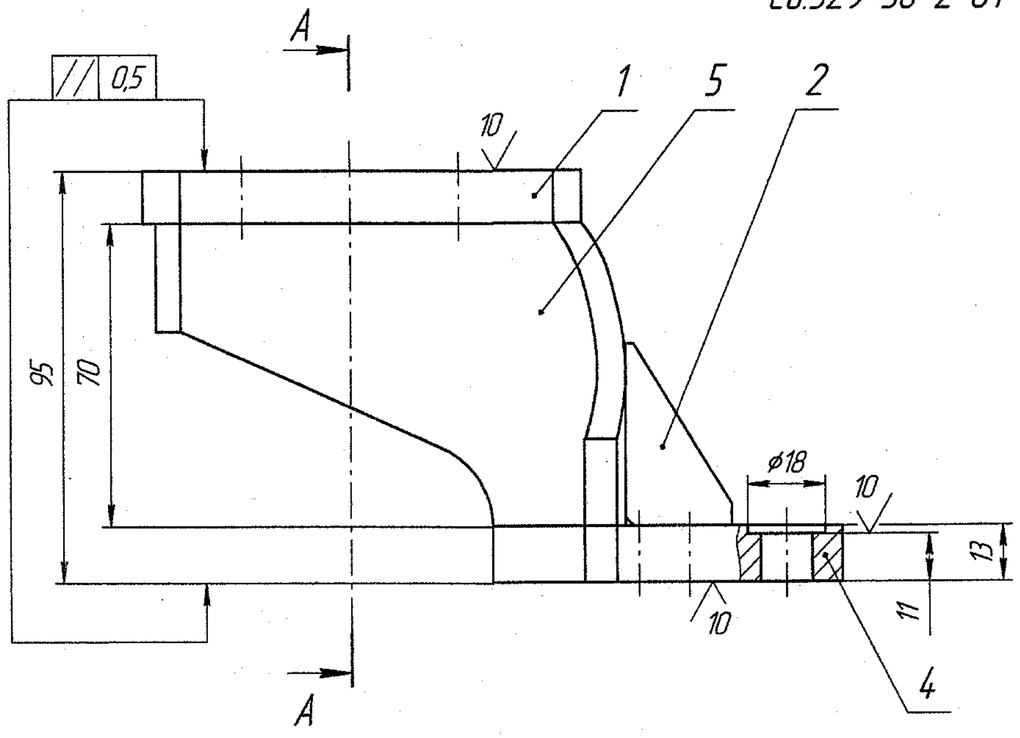

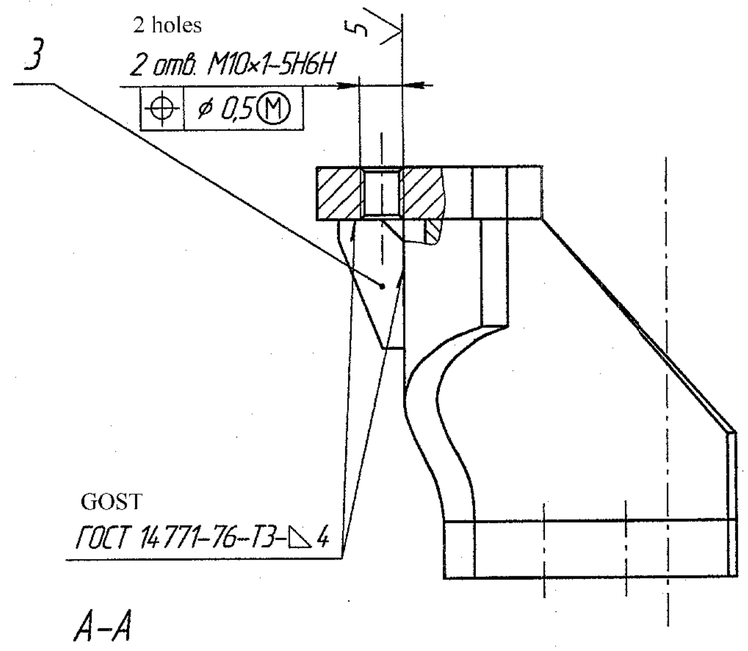

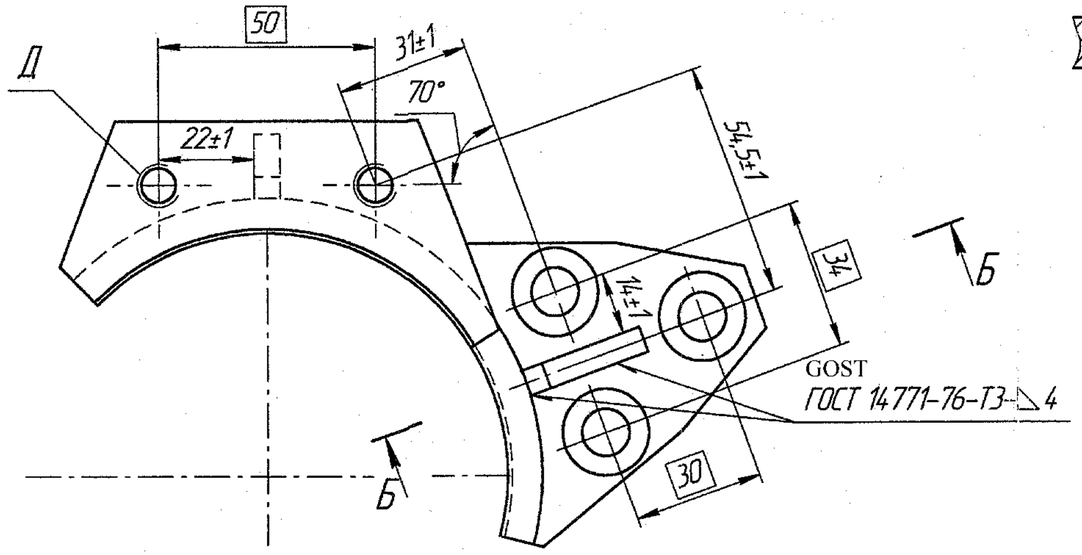

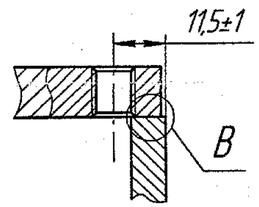

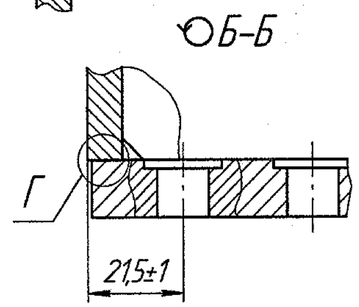

1. Неуказанные предельные отклонения размеров ±0,5мм.
2. Покрытие – лакокрасочное грунт АС-0195 – 1 слой, эмаль ПФ-115 ГОСТ 6465-76 цвет голубой – 1 слой.
3. Сварная конструкция I класса.
4. Допускается производить мех. обработку деталей поз.1 до сварки сборочной единицы.
5. Резьбу предохранять от покрытия. Допускается калибр
6. Сварка электро-дуговая по ГОСТ 14771-76.
7. Сварной шов около отв.Д с △3, на участке 12мм, не бол

1. Unspecified limit deviation of dimensions is ± 0.5 mm.
2. Coating - paint and varnish primer AC-0195-1 layer, enamel ПФ-115 GOST 6465-76 blue colour-1 layer.
3. Welded design I class.
4. It is permitted to carry out machining of part item 1 before welding of assembly units.
5. Thread is protected from coating. Gauge is permitted.
6. Electric arc welding as per GOST 14771-76.
7. Welding seams around hole Д with △3, on section 12 mm maximum.

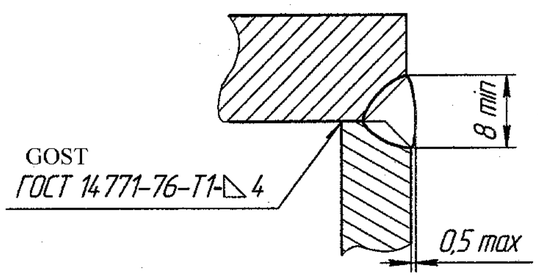

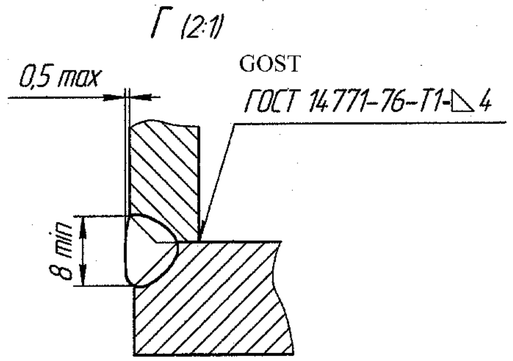

Инв. № подл.	Подп. и дата	Взам. инв. №	Инв. № дубл.	Подп. и дата			
47460		44827					

3	31-04			
Trans. & Ckd. By: M/s Swyaz		BRACKET	сб.329-58-2СБ	
Authenticated By:		Кронштейн	Лит.	Масса 1,05
Approved By: Engine Factory, Adavi		Сборочный чертёж	Лист	Лис
		Assembly drawing		

Копировал Формат