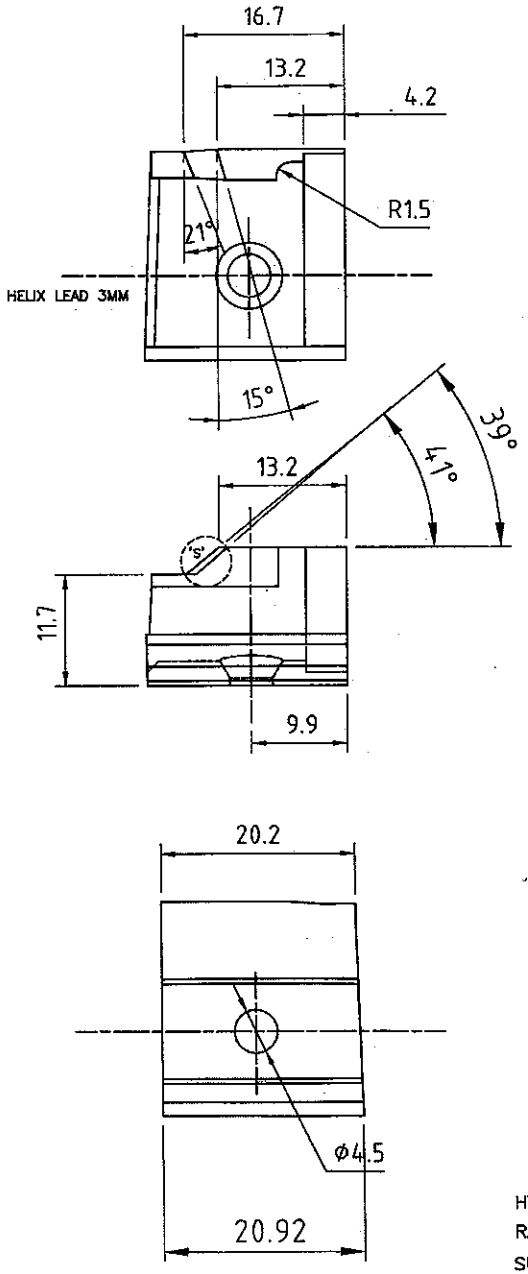

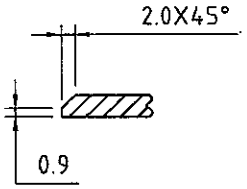

PART SECTION 'A–A'

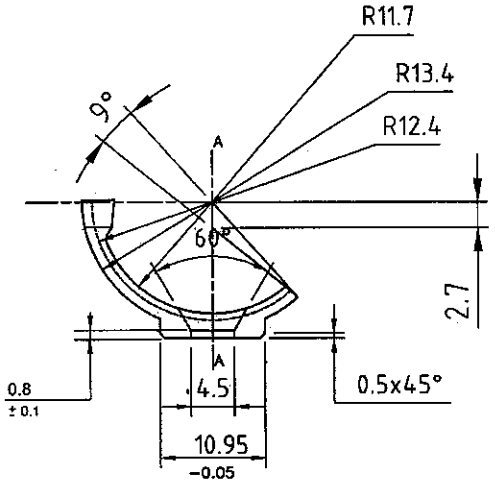

PROTECTIVE FINISH:–

PHOSPHATE TO SPECN. JSS 0465–01:1994, CLASS II (ACCELERATED) OIL FINISH.

MATERIAL: BS: 970 PT1:1983, GR 817 M40 (OR) En–24

(OR) BS: 970 PT1:1983, GR 826 M31 (OR) En–25

(OR) BS: 970 PT1:1983, GR 826 M40 (OR) En–26

UN CONTROLLED COPY

HT/HARDNESS:–

RAW MATERIAL TO BE HARDENED AND TEMPERED TO 300 – 350 HV

SURFACE 'S' TO BE INDUCTION HARDENED TO A DEPTH OF 1mm

MINIMUM 450–500HV

PART NO.	DESCRIPTIONS	NO OFF	MATERIAL	TREATMENT	REMARKS
1	BULLET GUIDE	1	REFER ABOVE		

DGM/PROJECT

SIGNATURE & DATE

TRACED

DRAWN

CHECKED

HOS/D&DO

OFFICER/PRODN.

OFFICER/D&DO

APPROVED ON. 18.07.2016

AMENDMENTS | SIG. & DATE

SUB: BULLET GUIDE

FOR: TRICHY ASSAULT RIFLE

DES.REF.NO.

DRG. No.: TAR-K-1101

ORDNANCE FACTORY TIRUCHIRAPPALLI–16.

SCALE ——

STORE DRG.NO. K–1101

OPERATION NO. ——

SHEETS: 1

SHEET No.: 1