DRAWING NUMBER
СБ 20-18-215

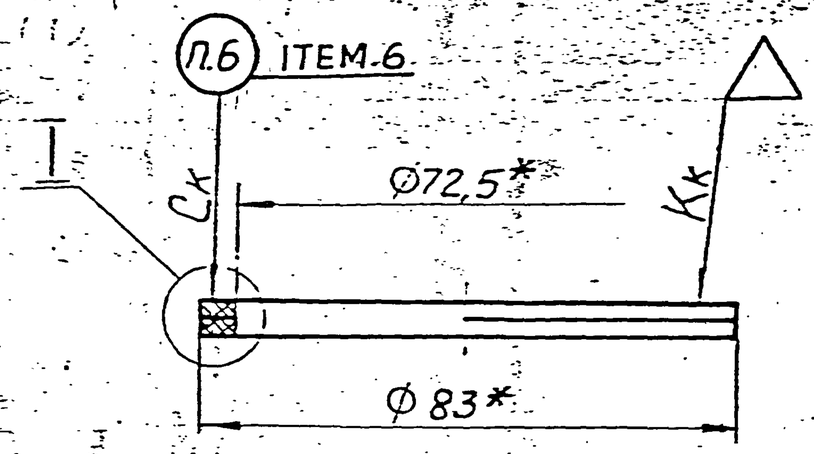

I SCALE 5:1

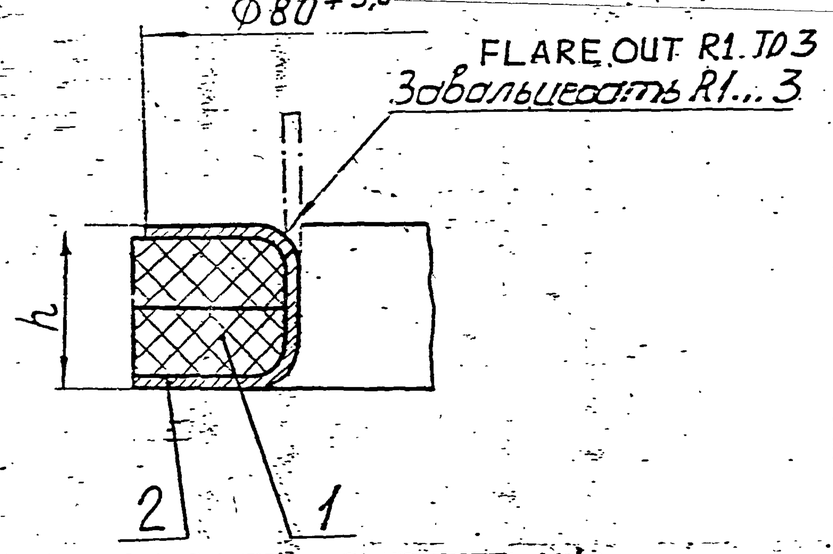

GROUP Группа	h мм
I	4,4-4,6
II	4,6-4,8
III	4,8-5,0
IV	5,0-5,4

1. CALIBRATE BY STATIC LOAD 490 ± 49N (50±5kg). MEASURE DIMENSION h UNDER SPECIFIED LOAD.
2. DIVIDE INTO GROUPS AS PER DIMENSION h IN ACCORDANCE WITH THE TABLE.
3. NO. DENTS, NICKS OR NOTCHES ARE TOLERATED ON BEARING SURFACES.
4. ACCEPT AGAINST STANDARD.
5. SELECT BY SETS OF 3 PIECES OF ONE DIMENSION GROUP.
6. MARK WITH TYPE Ц Р-3 GOST 2930-62.
7. * DIMENSIONS ARE GIVEN FOR REFERENCE.

PILOT SAMPLE SHOULD BE APPROVED BY A H S P BEFORE BULK PRODUCTION

EST. WT. 0.012 kg.

TO BE STAMPED OR MARKED WHERE INDICATED THUS # (LETTERS)

ALL SHARP EDGES AND CORNERS TO BE REMOVED UNLESS OTHERWISE STATED MACHINED CORNERS TO HAVE R OUT SIDE R INSIDE EQUIVALENT CHAMFERS ARE PERMISSIBLE

ISSUE	DATE	NATURE OF AMENDMENTS

DRN		
CHD		
TCD		
APPD	V. Romanov	
DATE	20-6-91	
SCALE	1:1	
DIMENSIONS IN mm		
TOLERANCE ON DIMNS UNLESS OTHERWISE STATED IS : 2102-69.		
ALL THREADS TO CONFORM TO		

MATERIAL:- [illegible]

USED ON СБ 20-18-201
СБ 20-18-00-4
СБ 20-18-202

CONTROLLERATE OF QUALITY ASSURANCE (HEAVY VEHICL AVADI

TITLE GASKET ASSY.

D S CAT NUMBER

DRAWING NUMBER СБ 20-18-215

SIZE A3

USED ON	ITEM	DRAWING NUMBER	D S CAT NUMBER	DESCRIPTION	NO. OFF	REMARKS
		C6 20-18-215		GASKET ASSY		
		& ITEM LIST				
C6 20-18-00-4 C6 20-18-201 C6 20-18-202	1	20-18-216		GASKET	2	
	2	20-18-240		SHELL	1	

ISSUE	DATE	NATURE OF AMENDMENTS	ISSUE	DATE	NATURE OF AMENDMENTS

DRN		CONTROLLERATE OF QUALITY ASSURANCE (HEAVY VEHICLES) AVADI		
CHD				
TCD		TITLE: GASKET. ASSY		
APPD		SHT. No. 1 OF 1	D S CAT NUMBER	ITEM LIST FOR C6 20-18-215
DATE	02-08-89			

DRAWING NUMBER
20-18-209

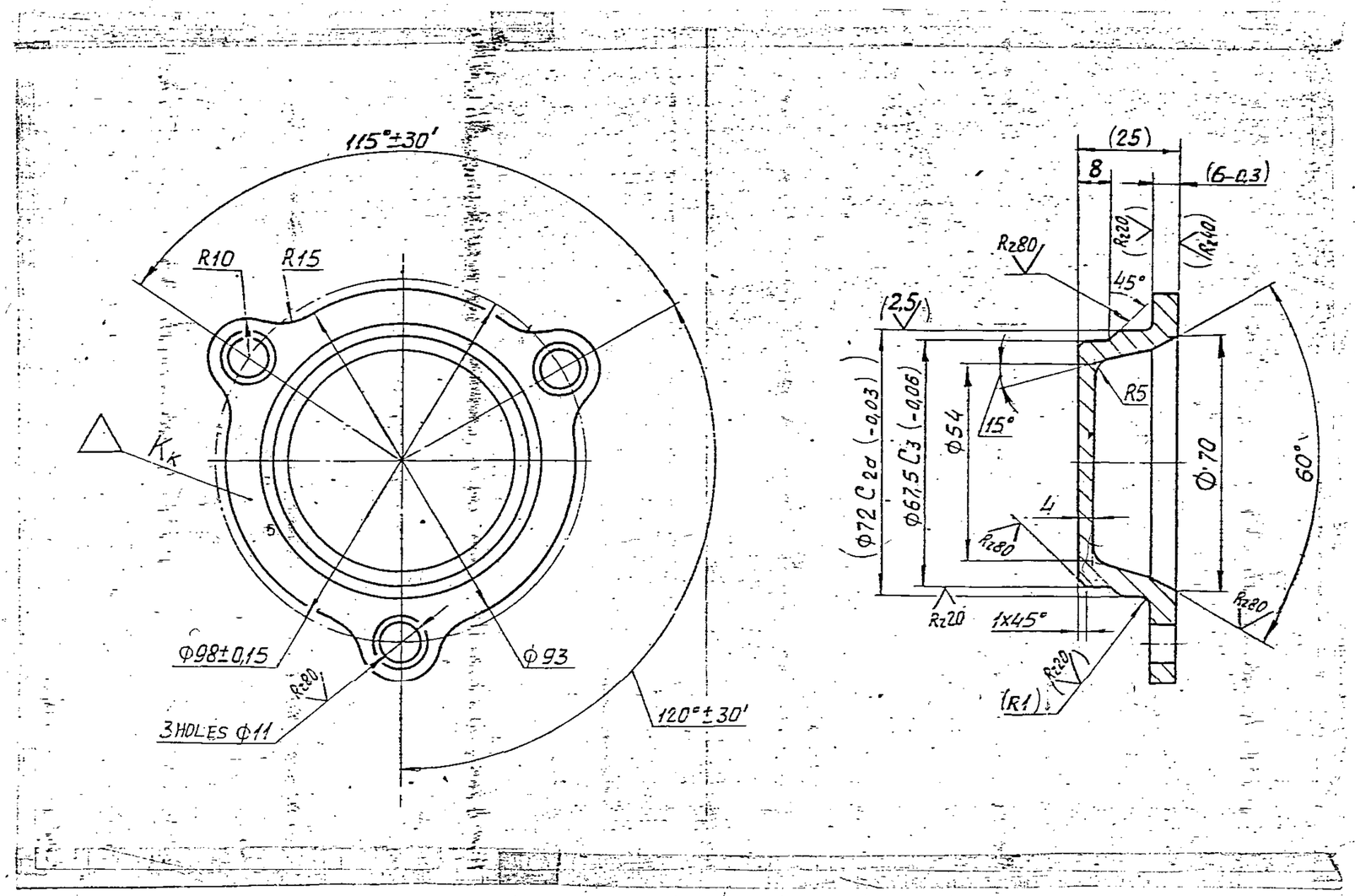

1. UNSPECIFIED LIMIT DEVIATIONS FOR DIMENSIONS ARE AS PER ACCURACY CLASS III GOST 2009-55.
2. UNSPECIFIED LIMIT DEVIATIONS OF DIMENSIONS ARE AS FOLLOWS:
   FOR HOLES AS PER A7,
   SHAFTS AS PER B7,
   OTHERS AS PER CM7.
3. DIMENSIONS AND SURFACE FINISH ARE GIVEN IN BRACKETS AFTER IN ASSEMBLY.

EXPLANATORY NOTE:-

MATERIAL QUOTED:
12 X 18 H 9 T Л GOST 2176-77.
CASTING MADE OF RICH-ALLOY STEEL HAVING SPECIAL PROPERTIES.

CHEMICAL COMPOSITION: %
CARBON = 0.12 (MAX.); SILICON = 0.20-1.00;
MANGANESE = 1.00-2.00; CHROMIUM = 17-0-20.0;
NICKEL = 8.00-11.00; TITANIUM = 0.60-0.80;
COPPER = 0.30 (MAX); SULPHUR = 0.030 (MAX)
PHOSPHORUS = 0.035 (MAX).

MECHANICAL PROPERTIES:

YIELD STRENGTH kgf/mm^2 (MIN) = 20
ULTIMATE STRENGTH kgf/mm^2 (MIN) = 45
ELONGATION % (MIN) = 25
REDUCTION IN AREA % (MIN) = 32
IMPACT STRENGTH $kgfm./cm^2$ (MIN) = 6
HARDENING AT 1100 TO 1150°C, COOLING IN WATER.

PILOT SAMPLE SHOULD BE APPROVED BY A H S P BEFORE BULK PRODUCTION.

EST. WT. 0.5 kg.	TO BE STAMPED OR MARKED WHERE INDICATED THUS (LETTERS)

ALL SHARP EDGES AND CORNERS TO BE REMOVED. UNLESS OTHERWISE STATED MACHINED CORNERS TO HAVE R OUTSIDE R - INSIDE. EQUIVALENT CHAMFERS ARE PERMISSIBLE.

DRN		MATERIAL :- 12X18H9TЛ GOST 2176-77
CHD		USED ON CB 20-18-203
TCD		
APPD	V. Romanov	CONTROLLERATE OF QUALITY ASSURANCE (HEAVY VEHICLES) AVADI
DATE	3-8-91	
SCALE :- 1:1		
DIMENSIONS IN mm		TITLE : COVER
TOLERANCE ON DIMNS UNLESS OTHERWISE STATED IS 2102-69		
ALL THREADS TO CONFORM TO		D S CAT NUMBER / DRAWING NUMBER 20-18-209

ISSUE 12 - 1638-81

SIZE A2

DRAWING NUMBER
20-18-210

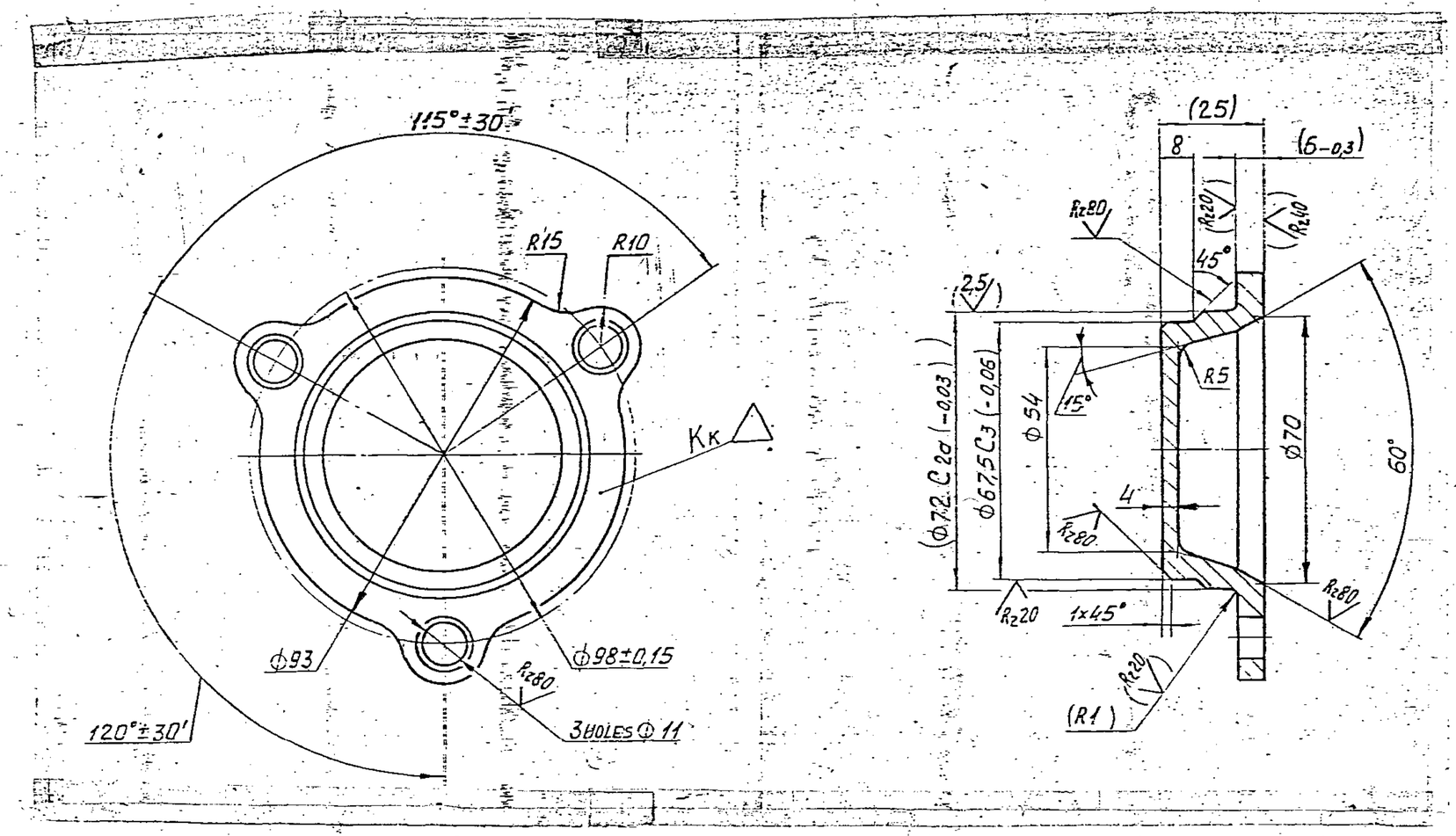

1. UNSPECIFIED LIMIT DEVIATIONS OF CASTING DIMENSIONS ARE AS PER ACCURACY CLASS III GOST 2009-55.
2. UNSPECIFIED LIMIT DEVIATIONS OF DIMENSIONS ARE AS FOLLOWS:
   FOR HOLES AS PER A7,
   SHAFTS AS PER B7,
   OTHERS AS PER CM8.
3. DIMENSIONS AND SURFACE FINSH ARE GIVEN IN BRACKETS AFTER ASSEMBLY.

EXPLANATORY NOTE:-

MATERIAL QUOTED:

12X18H9TЛ GOST 2176-77

CASTING MADE OF RICH-ALLOY STEEL HAVING SPECIAL PROPERTIES.

CHEMICAL COMPOSITION :%

CARBON = 0.12 (MAX); SILICON = 0.20-1.00;
MANGANESE = 1.00-2.00; CHROMIUM = 17.00-20.00;
NICKEL = 8.00-11.00; TITANIUM = 0.60-0.80;
COPPER = 0.30 (MAX); SULPHUR = 0.030 (MAX);
PHOSPHORUS = 0.035 (MAX).

MECHANICAL PROPERTIES:

YIELD STRENGTH Kgf/mm² (MIN) = 20
ULTIMATE STRENGTH Kgf/mm² (MIN) = 45
ELONGATION % (MIN) = 25
REDUCTION IN AREA % (MIN) = 32
IMPACT STRENGTH Kgf/cm² (MIN) = 6
HARDENING - AT 1100 TO 1150°C; COOLING IN WATER.

PILOT SAMPLE SHOULD BE APPROVED BY A H S P BEFORE BULK PRODUCTION.

EST. WT. 0.5 kg	TO BE STAMPED OR MARKED WHERE INDICATED THUS (LETTERS)

ALL SHARP EDGES AND CORNERS TO BE REMOVED. UNLESS OTHERWISE STATED MACHINED CORNERS TO HAVE R OUTSIDE R INSIDE. EQUIVALENT CHAMFERS ARE PERMISSIBLE.

DRN		MATERIAL :- 12X18H9TЛ GOST 2176-77	USED ON CБ 20-18-204
CHD			
TCD			
APPD	V. Romanov	CONTROLLERATE OF QUALITY ASSURANCE (HEAVY VEHICLES) AVADI	
DATE	3-8-91		
SCALE :- 1:1			
DIMENSIONS IN mm		TITLE : COVER	
TOLERANCE ON DIMNS UNLESS OTHERWISE STATED IS 2102-69			
ALL THREADS TO CONFORM TO		D S CAT NUMBER	DRAWING NUMBER 20-18-210

ISSUE 12-1638-81

SIZE A2

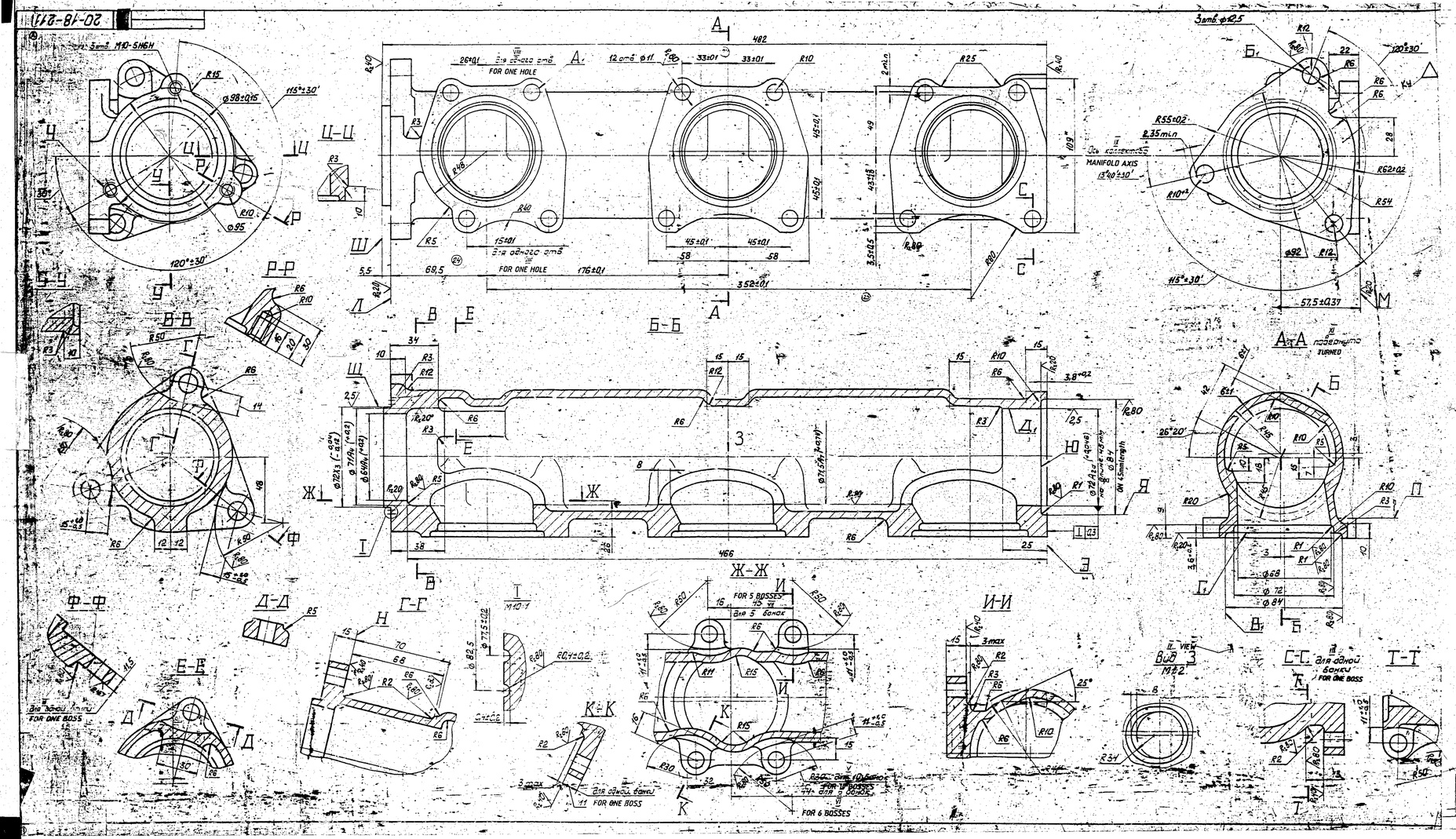

1. CONTROL GROUP III TO TT-11-HB 197 ... 255, LOW TEMPERATURE MALLEABLIZING.
2. REQUIREMENTS APPLIED TO A CASTING ARE TO TT 4 Л 310 - 7/66 AND III ACCURACY CLASS, GOST 1855-55. CASTING INNER SURFACE SHOULD BE CLEAN.
3. SUBJECT THE CASTING TO A WATER PRESSURE TEST WITH WATER WARMED UP TO 70 ... 80°C AND DELIVERED UNDER 0.35 ± 0.05 MPa (3.5 ± 0.5 Kg/cm²) PRESSURE AND HOLDING FOR 3 + 1 Min. WATER LEAKAGE IS NOT ALLOWED.
4. NON-INDICATED LIMIT DEVIATIONS OF DIMENSIONS HOLES - BY A7, SHAFTS - BY B7, THE REST - BY CM8.
5. TOLERANCE OF M SURFACE PLANARITY RELATIVE TO TOTAL JOINING PLANE IS 0.1mm.
6. TOLERANCE OF П SURFACE PLANARITY IN THE CASTING RELATIVE TO TOTAL JOINING PLANE IS 1.5 mm.
7. TOLERANCE OF Л SURFACE PLANARITY IS 0.1mm.
8. TOLERANCE OF Л SURFACE PERPENDICULARITY RELATIVE TO M SURFACE IS 0.3mm.
9. TOLERANCE OF H SURFACE PARALLELISM RELATIVE TO Л SURFACE IS 0.16mm WITHIN EACH BOSS.
10. COATING A 50 ... 200 IS MADE BY THE METHOD OF SPRAYING OVER EXTERNAL SURFACE: Л, М, Ш, Щ, З, Ю, Я, Д₁, Г₁, В₁, SURFACE: 3 HOLES Ч, 12 HOLES А₁, 3 HOLES Б₁, SHOULD BE PROTECTED FROM COATING. FOR 12 HOLES А₁ AND 3 HOLES Б₁ THE FOLLOWING IS ALLOWED: ABSENCE OF COATING AT 2mm DISTANCE FROM HOLE EDGES: COATING TRACE IN HOLES MAKE ACCEPTANCE TO STANDARD.
11. * THE DIMENSION IS FOR REFERENCES.

PILOT SAMPLE SHOULD BE APPROVED BY A H S P BEFORE BULK PRODUCTION.

EST WT. 8.7 Kg

TO BE STAMPED OR MARKED WHERE INDICATED THUS ⊕ LETTERS!

ALL SHARP EDGES AND CORNERS TO BE REMOVED UNLESS OTHERWISE STATED. MACHINED CORNERS TO HAVE R OUTSIDE R INSIDE EQUIVALENT CHAMFERS ARE PERMISSIBLE.

ISSUE	DATE	NATURE OF AMENDMENTS	AUTHY. LT. No. B32564/	DRN	CHD	TCD	APPD	DATE 16.3.86	SCALE 1:1
A	5.3.93								

DIMENSIONS IN mm
TOLERANCE ON DIMS UNLESS OTHERWISE STATED IS 2102-68
ALL THREADS TO CONFORM TO

MATERIAL - SPECIAL CAST IRON AS PER Л 310-7/66
USED ON - СБ 20-19-211
CONTROLLERATE OF QUALITY ASSURANCE (HEAVY VEHICLES) AVADI
TITLE: R.H. EXHAUST MANIFOLD
O S CAT NUMBER
TOP-WING CHASSIS
20-19-211

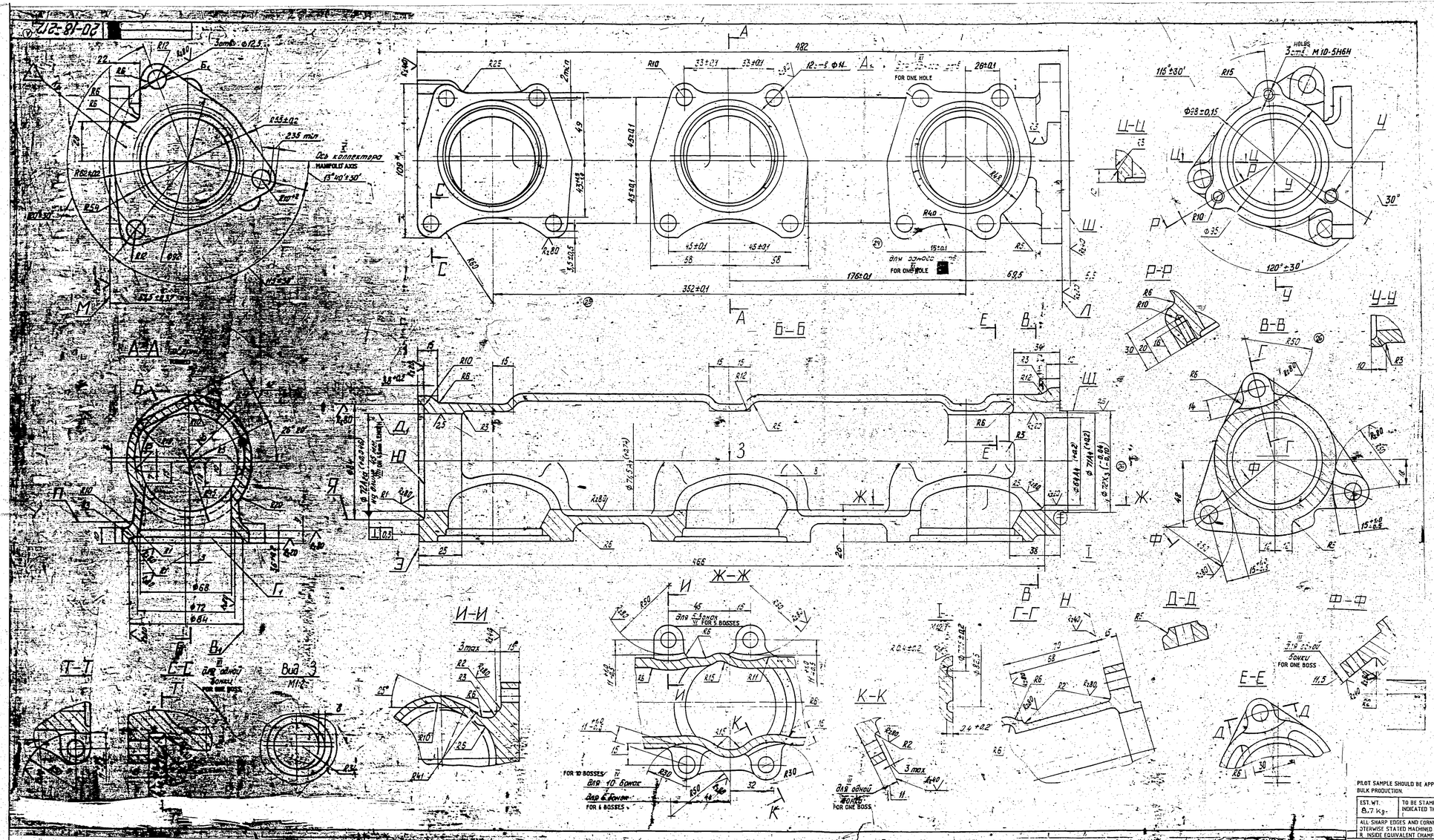

1. CONTROL GROUP III TO TT-11. HB 197---255, LOW TEMPERATURE MALLEABLIZING.
2. REQUIREMENTS APPLIED TO A CASTING ARE TO TT 4 Л 310-7/66 AND III ACCURACY CLASS, GOST 1855-55. CASTING INNER SURFACE SHOULD BE CLEAN.
3. SUBJECT THE CASTING TO A WATER PRESSURE TEST WITH WATER WARMED UP TO 70---80°C DELIVERED UNDER 0.35±0.05 MPa (3.5±0.5 Kgf/cm²) PRESSURE AND HOLDING FOR 3+1 Min. WATER LEAKAGE IS NOT ALLOWED.
4. NON-INDICATED LIMIT DEVIATIONS OF DIMENSIONS. HOLES - BY A7, SHAFTS - BY B7. THE REST - BY CM8.
5. TOLERANCE OF M SURFACE PLANARITY RELATIVE TO TOTAL JOINING PLANE IS 0.1mm.
6. TOLERANCE OF П SURFACE PLANARITY IN THE CASTING RELATIVE TO TOTAL JOINING PLANE IS 1.5mm.
7. TOLERANCE OF Л SURFACE PLANARITY IS 0.1mm.
8. TOLERANCE OF Л SURFACE PERPENDICULARITY RELATIVE TO M SURFACE IS 0.3mm.
9. TOLERANCE OF H SURFACE PARALLELISM RELATIVE TO Л SURFACE IS 0.16mm WITHIN EACH BOSS.
10. COATING A 50---200 IS MADE BY THE METHOD OF SPRAYING OVER EXTERNAL SURFACE; Л M, Ш, Щ, З, Ю, Я, А₁, Г, Б, SURFACE 3 HOLES Ч, 12 HOLES А₁ AND 3 HOLES Б₁ SHOULD BE PROTECTED FROM COATING. FOR 12 HOLES А₁ AND 3 HOLES Б₁ THE FOLLOWING IS ALLOWED: ABSENCE OF COATING AT 2mm DISTANCE FROM HOLE EDGES; COATING TRACE IN HOLES. MAKE ACCEPTANCE TO STANDARD
11. THE DIMENSION IS FOR REFERENCES.

PILOT SAMPLE SHOULD BE APPROVED BY A H S P BEFORE BULK PRODUCTION.

EST. WT. 8.7 kg.	TO BE STAMPED OR MARKED WHERE INDICATED THUS ⊕ (LETTERS)

ALL SHARP EDGES AND CORNERS TO BE REMOVED UNLESS OTHERWISE STATED MACHINED CORNERS TO HAVE R OUTSIDE R INSIDE EQUIVALENT CHAMFERS ARE PERMISSIBLE.

ISSUE	DATE	NATURE OF AMENDMENTS
A	5-3-92	AUTHY LT. № 832441/ПО ПЕТ.Д 2-24

DRN
CHD
TCD
APPD
DATE
SCALE - 1:1
DIMENSIONS IN mm
TOLERANCE ON DIMNS UNLESS OTHERWISE STATED IS 2102 - 69
ALL THREADS TO CONFORM TO

MATERIAL - SPECIAL CAST IRON AS PER TTУЛ 310-7/66

USED ON - СЕ 20-18-202

CONTROLLERATE OF QUALITY ASSURANCE (HEAVY VEHICLES) AVADI

TITLE: L.H. EXHAUST MANIFOLD

D S CAT NUMBER

DRAWING NUMBER 20-18-212

DRAWING NUMBER
20-18-213

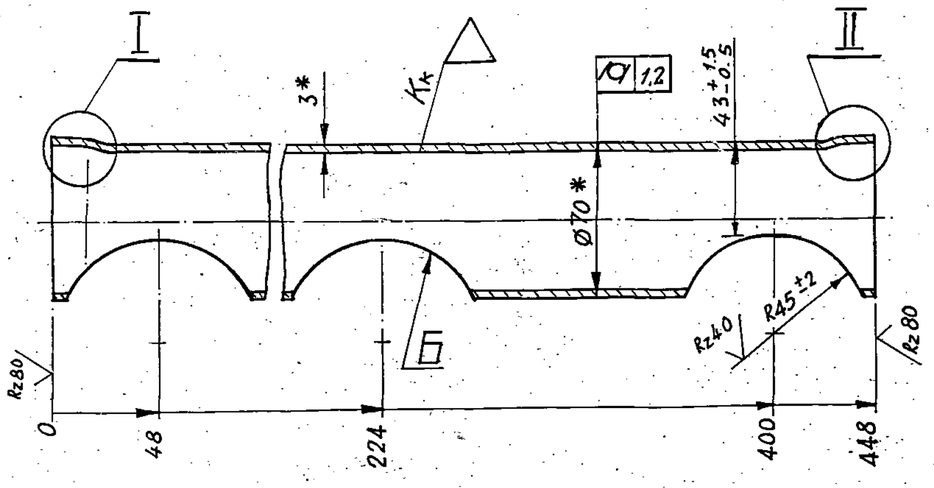

I
SCALE 1:1

II
SCALE 1:1

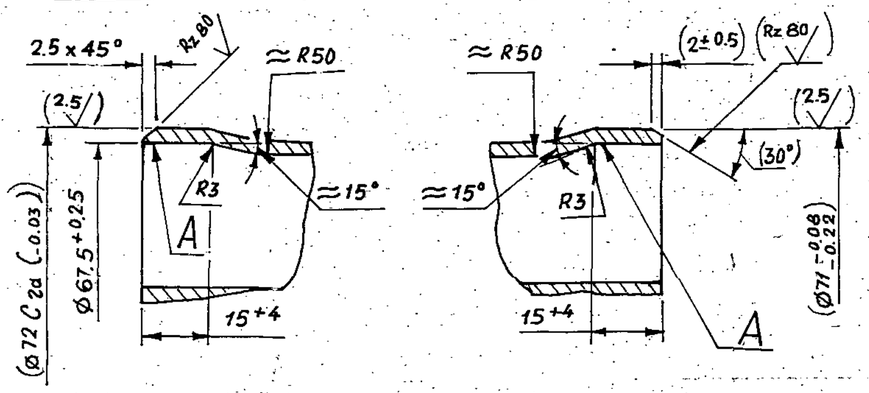

1. UNSPECIFIED LIMIT DEVIATIONS OF DIMENSIONS ARE AS FOLLOWS FOR HOLES - AS PER A7,
   SHAFTS - AS PER B7,
   OTHERS - AS PER CM8.
2. THICKNESS OF PIPE WALLS IN SECTIONS TO BE MACHINED SHOULD BE AT LEAST 1.8mm.
3. FINISH OF SURFACE A AFTER FLARE-UP IS ACCEPTED AGAINST STANDARD.
4. DIMENSIONS AND SURFACES FINISH ARE GIVEN IN BRACKETS AFTER ASSEMBLY.
5. MACHINING OF THREE HOLES Б MAY BE CARRIED OUT IN ASSEMBLIES ASSY. 20-18-203, ASSY. 20-18-204
6. * DIMENSIONS ARE GIVEN FOR REFERENCE.

EXPLANATORY NOTE:

MATERIAL QUOTED:
PIPE 70X3-12X18 H10T GOST 9941-81
- SEAMLESS COLD AND WARM DEFORMED STEEL PIPES
70 = EXTERNAL DIAMETER ; 3 = THICKNESS OF PIPE HAVING NORMAL MANUFACTURING ACCURACY WITH NON-UNIFORM LENGTH.
12X18 H10T = GRADE OF MATERIAL

CHEMICAL COMPOSITION :- (AS PER GOST 5632-72)

CARBON	= 0.12 (MAX)
SILICON	= 0.8 (MAX)
MANGANESE	= 2.0 (MAX)
CHROMIUM	= 17.0 - 19.0
SULPHUR	= 0.020 (MAX)
PHOSPHORUS	= 0.035 (MAX)
NICKEL	= 9.0 - 11.0
TITANIUM	= 0.8 (MAX)

MECHANICAL PROPERTIES:

ULTIMATE TENSILE STRENGTH Kgf/mm^2	= 56 (MIN)
PRECENTAGE ELONGATION Kgf/mm^2	= 35 (MIN)
YIELD POINT Kgf/mm^2	= 22 (MIN)
DENSITY g/cm^3	= 7.95 (MIN)

PILOT SAMPLE SHOULD BE APPROVED BY A H S P BEFORE BULK PRODUCTION.

EST. WT. 1.8 Kg.	TO BE STAMPED OR MARKED WHERE INDICATED THUS (LETTERS)

ALL SHARP EDGES AND CORNERS TO BE REMOVED. UNLESS OTHERWISE STATED MACHINED CORNERS TO HAVE R OUT - SIDE R INSIDE. EQUIVALENT CHAMFERS ARE PERMISSIBLE.

ISSUE	DATE	NATURE OF AMENDMENTS

DRN	G. Nanjunda	MATERIAL :- PIPE - 70X3-12X18 H10T GOST 9941-81
CHD		USED ON CБ 20-18-203, CБ 20-18-204
TCD	G. Nanjunda	
APPD	V. Ramaraju	CONTROLLERATE OF QUALITY ASSURANCE (HEAVY VEHICLES) AVADI
DATE	20-3-92	
SCALE :- 1:2		
DIMENSIONS IN mm		TITLE : MANIFOLD PIPE
TOLERANCE ON DIMNS UNLESS OTHERWISE STATED IS 2102-69		
ALL THREADS TO CONFORM TO		D S CAT NUMBER
		DRAWING NUMBER 20-18-213

SIZE A2

DRAWING NUMBER
20-18-216

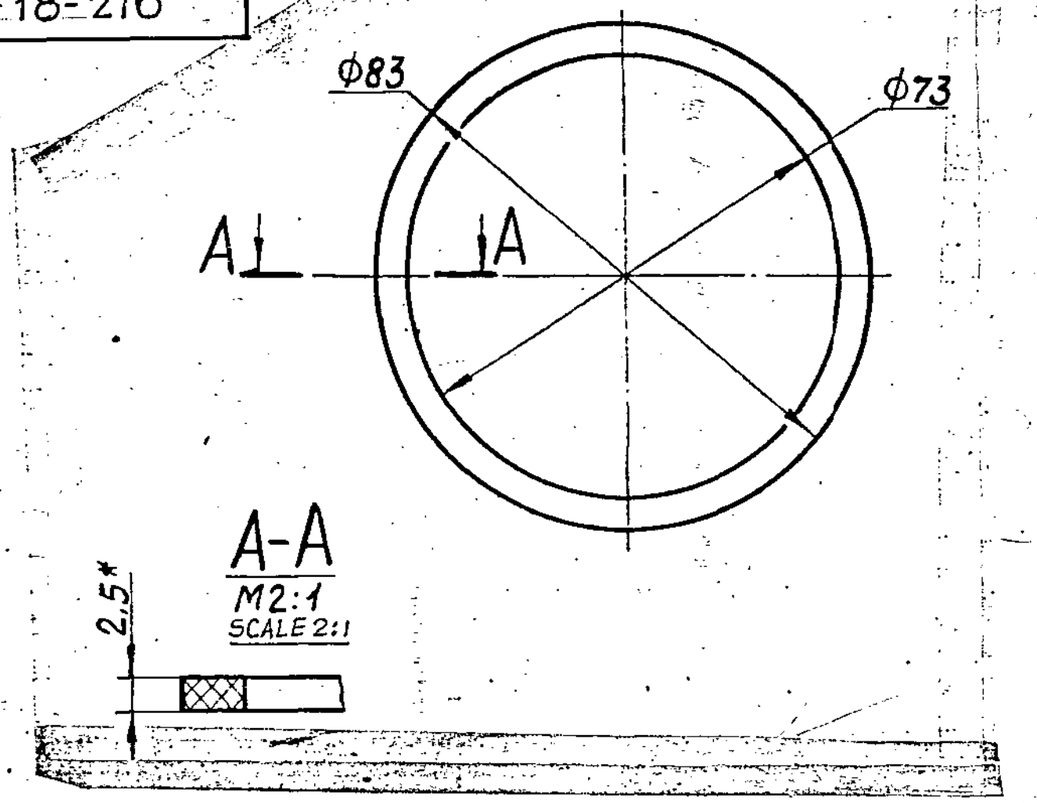

1. UNSPECIFIED LIMIT DEVIATIONS OF DIMENSIONS ARE AS FOLLOWS:
   FOR HOLES AS PER A7,
   SHAFTS AS PER B7,
2. * DIMENSION IS GIVEN FOR REFERENCE.

EXPLANATORY NOTE:-

MATERIAL QUOTED:

ASBESTOS BOARD KAП- 2.5 GOST 2850-80

KAП (KAP) = ASBESTOS MILLBOARD FOR PACKING JOINTS.

PHYSICAL AND MECHANICAL PROPERTIES:

1. DENSITY kgf/m^3 = 900 TO 1200
2. ULTIMATE TENSILE STRENGTH kgf/cm^2
   (a) IN LONGITUDINAL DIRECTION (MIN) = 25
   (b) IN TRANSVERSE DIRECTION (MIN) = 15
3. % MOISTURE CONTENT (MAX) = 3
4. LOSS OF WEIGHT BY CALCINATION % (MAX) = 18

PILOT SAMPLE SHOULD BE APPROVED BY A H S P BEFORE BULK PRODUCTION

EST. WT. 0.004 kg.

TO BE STAMPED OR MARKED WHERE INDICATED THUS # (LETTERS)

ALL SHARP EDGES AND CORNERS TO BE REMOVED UNLESS OTHERWISE STATED MACHINED CORNERS TO HAVE R OUT SIDE R INSIDE EQUIVALENT CHAMFERS ARE PERMISSIBLE.

ISSUE	DATE	NATURE OF AMENDMENTS

DRN		MATERIAL:- ASBESTOS BOARD KAП-2.5 GOST 2850-80
CHD		USED ON C5 20-18-215
TCD		
APPD	V. Romano	CONTROLLERATE OF QUALITY ASSURANCE (HEAVY VEHICLES) AVADI.
DATE	31-8-91	
SCALE:- 1:1		
DIMENSIONS IN mm		TITLE GASKET
TOLERANCE ON DIMNS UNLESS OTHERWISE STATED IS : 2102-69.		
ALL THREADS TO CONFORM TO		D S CAT NUMBER –
		DRAWING NUMBER 20-18-216

SIZE A3

ISSUE 6 - 1638-81

DRAWING NUMBER
20-18-240

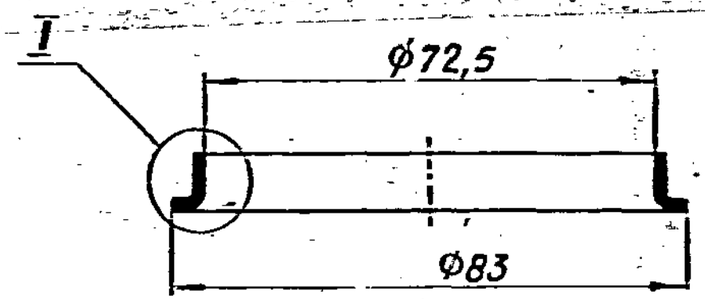

I
M5:1
SCALE 5:1

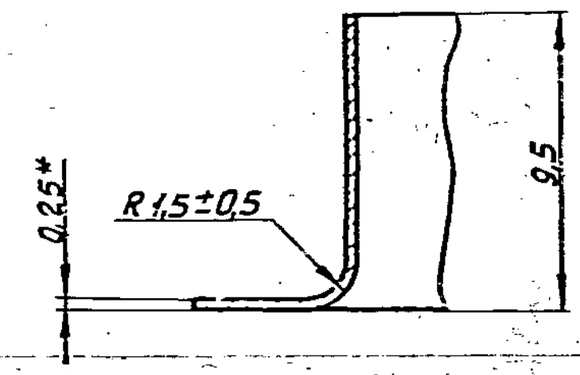

1. UNSPECIFIED LIMIT DEVIATIONS OF DIMENSIONS ARE AS FOLLOWS
   FOR HOLES AS PER A7,
   * FOR SHAFTS AS PER B7.
2. DIMENSION IS GIVEN FOR REFERENCE.

EXPLANATORY NOTE:

MATERIAL QUOTED : STRIP M 0.25 M3 GOST 1173-77

M = SOFT ; 0.25 = THICKNESS ;

M3 = GRADE OF COPPER AS PER GOST 859-78

CHEMICAL COMPOSITION (AS PER GOST 859-78)

BASIC CONSTITUENT = Cu + Ag (MIN) = 99.5

IMPURITIES :

BISMUTH = 0.003 ; ANTIMONY = 0.05 ;

ARSONIC = 0.01 ; IRON = 0.05 ; NICKEL = 0.2 ;

LEAD = 0.05 ; TIN = 0.05 ; SULPHUR = 0.01 ; OXYGEN = 0.05

MECHANICAL PROPERTIES (AS PER GOST 1173-77)

MATERIAL CONDITION = SOFT

TENSILE STRENGTH Kgf/mm^2 (MIN) = 20

% ELONGATION (MIN) = 30.

PILOT SAMPLE SHOULD BE APPROVED BY A H S P BEFORE BULK PRODUCTION

EST. WT. 0.004 Kg.

TO BE STAMPED OR MARKED WHERE INDICATED THUS # (LETTERS)

ALL SHARP EDGES AND CORNERS TO BE REMOVED UNLESS OTHERWISE STATED MACHINED CORNERS TO HAVE R OUT SIDE R INSIDE EQUIVALENT CHAMFERS ARE PERMISSIBLE.

ISSUE	DATE	NATURE OF AMENDMENTS

DRN		MATERIAL STRIP M 0.25 M3 GOST 1173-77	USED ON C5 20-18-215
CHD			
TCD			
APPD			
DATE	15-7-91	CONTROLLERATE OF QUALITY ASSURANCE (HEAVY VEHICLES) AVADI	
SCALE	1:1		
DIMENSIONS IN mm		TITLE SHEEL	
TOLERANCE ON DIMNS UNLESS OTHERWISE STATED IS : 2102-69.			
ALL THREADS TO CONFORM TO		D S CAT NUMBER	DRAWING NUMBER 20-18-240

ISSUE B - 1635-81

SIZE A3

DRAWING NUMBER
20-18-241

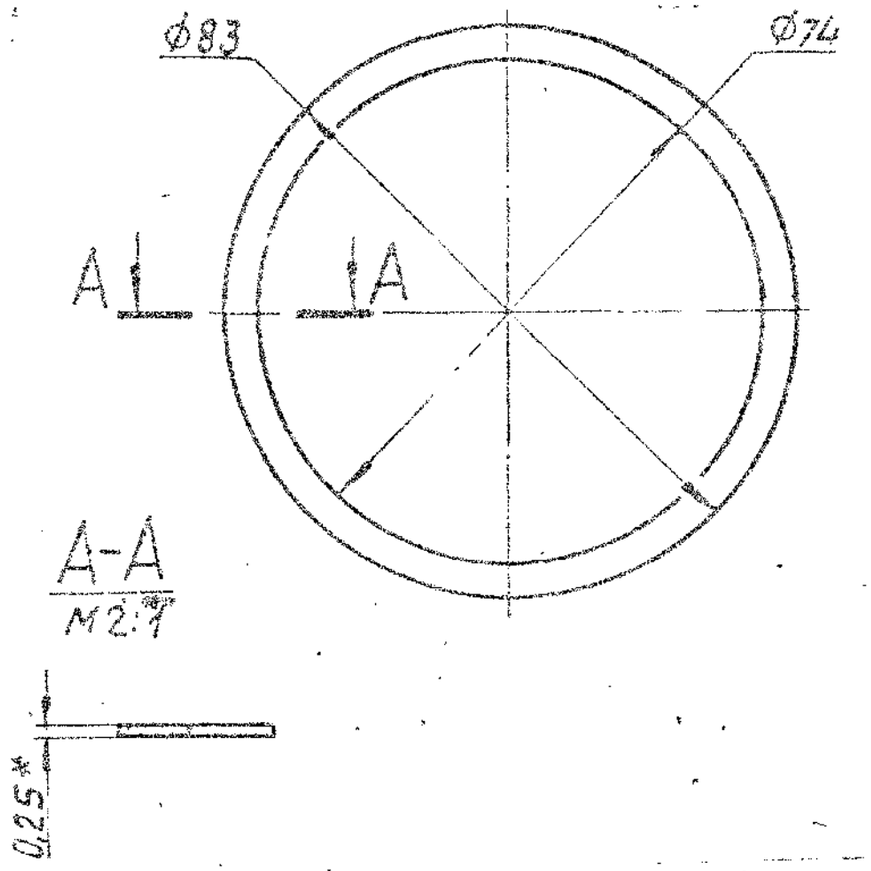

EXPLANATORY NOTE:

MATERIAL QUOTED: STRIP-M 0.25 M3 GOST 1173-77

M = SOFT ; 0.25 = THICKNESS ;

M3 = GRADE OF COPPER AS PER GOST 859-78

CHEMICAL COMPOSITION (AS PER GOST 859-78) %

BASIC CONSTITUENT = Cu+Ag (MIN) = 99.5

IMPURURITIES: %

BISMUTH = 0.003 ; ANTIMONY = 0.05 ;

ARSENIC = 0.01 ; IRON = 0.05 ; TIN = 0.05 ;

NICKEL = 0.2 ; LEAD = 0.05 ; SULPHUR = 0.01 ;

OXYGEN = 0.05 %

MECHANICAL PROPERTIES (AS PER GOST 1173-77)

MATERIAL CONDITION = SOFT

TENSILE STRENGTH kgf/mm^2 (MIN) = 20

% ELONGATION (MIN) = 30

1. UNSPECIFIED LIMIT DEVIATIONS OF DIMENSIONS ARE AS FOLLOWS:

   FOR HOLES AS PER A7,

   SHAFTS AS PER B7,

2. DIMENSIONS GIVEN FOR REFERENCE

(5), (12), (25)

PILOT SAMPLE SHOULD BE APPROVED BY A H S P BEFORE BULK PRODUCTION

EST. WT. 0.003 kg.

TO BE STAMPED OR MARKED WHERE INDICATED THUS # (LETTERS)

ALL SHARP EDGES AND CORNERS TO BE REMOVED UNLESS OTHERWISE STATED MACHINED CORNERS TO HAVE R (OUT SIDE R) OR EQUIVALENT CHAMFERS ARE PERMISSIBLE

DRN		
CHD		
TCD		
APPD		
DATE	15-7-91	
SCALE	1:1	
DIMENSIONS IN mm		
TOLERANCE ON DIMNS UNLESS OTHERWISE STATED IS : 2102-69.		
ALL THREADS TO CONFORM TO		

MATERIAL STRIP M 0.25 M3 GOST 1173-77

USED ON CB 20-18-201, CB 20-18-202, CB 20-18-00-4

CONTROLLERATE OF QUALITY ASSURANCE (HEAVY VEH) AVADI

TITLE: RING

D'S CAT NUMBER

DRAWING NUMBER 20-18-241

ISSUE	DATE	NATURE OF AMENDMENTS

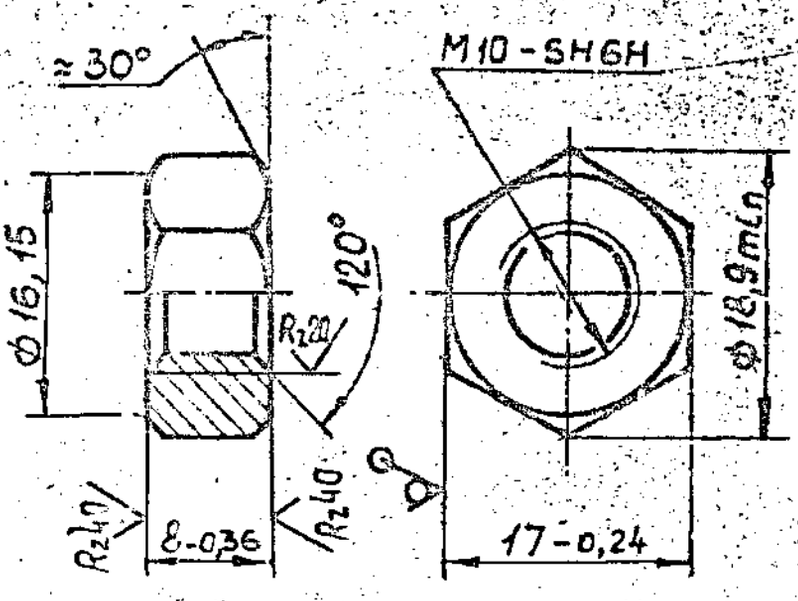

Ⓐ **EQUIVALENT MATERIAL STEEL**
45C8 TO IS:1570

** HEXAHEDRON $\frac{\text{17-5 GOST 8560-78}}{\text{45 GOST 1050-74}}$

COATING : COPPER-PLATED, 6 MICRONS THICK.

Ⓑ Восстановлено с подлинника
Ⓒ Верно 4/II-82г. /Осипов/

Инв. № подл. | Подпись и дата

PILOT SAMPLE SHOULD BE APPROVED BY A.H.S.P. BEFORE BULK PRODUCTION

A	13.8.10	4th Alt.Comm. Meeting Minutes Point No.11 Dt: 26-10-09	EST. MASS 1000 PIECES 11,370 Kg.
ISSUE	DATE	NATURE OF AMENDMENTS	MATERIAL:- ** SEE ABOVE
DRN		SCALE : 2 : 1	USED ON:- T,20 - 18 - 00 - 4
CHD		DIMENSIONS IN mm	CONTROLLERATE OF QUALITY ASSURANCE(HEAVY VEHICLES) AVADI
TCD		TOLERANCE ON DIMS UNLESS OTHERWISE STATED	TITLE: NUT M10-5H6Hx8,0-36 GOST 5927-70
APPD		ALL DIMENSIONS TO CONFORM TO	DS CAT NUMBER
DATE 28-1-88			DRAWING NUMBER 20-51-10

TO BE STAMPED OR MARKED WHERE INDICATED THUS # LETTER J

ALL SHARP EDGES AND CORNERS TO BE REMOVED UNLESS OTHERWISE STATED MACHINED CORNERS TO HAVE R OUTSIDE R INSIDE EQUIVALENT CHAMFERS ARE PERMISSIBLE

20-51-10

DRAWING NUMBER
20-56-10

Rz40/ (√)

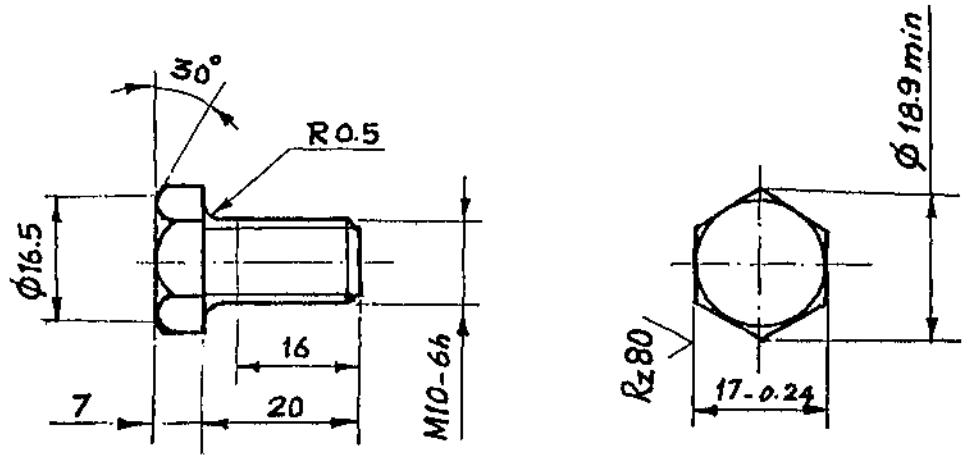

1. INSPECTION GROUP IV AS PER TECHNICAL REQUIREMENTS TT-11, HB 209 TO 241.
2. UNSPECIFIED LIMIT DEVIATIONS OF DIMENSIONS ARE AS FOLLOWS: FOR SHAFTS - AS PER B_7,
   OTHERS - AS PER CM_8.
3. (A) BOLT SHALL BE FORGED FROM HEAT RESISTING STEEL 22 Cr 13 TO IS 1570 OR EN 56B TO BS 970.

PILOT SAMPLE SHOULD BE APPROVED BY A H S P BEFORE BULK PRODUCTION.

		EST. WT. 0.025g	TO BE STAMPED OR MARKED WHERE INDICATED THUS ⫼ (LETTERS)
		ALL SHARP EDGES AND CORNERS TO BE REMOVED UNLESS OTHERWISE STATED MACHINED CORNERS TO HAVE R OUTSIDE R INSIDE EQUIVALENT CHAMFERS ARE PERMISSIBLE.	
A	8.3.02	AUTHY LT No. 93702/EFA/IFD/GCF/IND-III/300 dt 4-3-02	MATERIAL:- (A) 20X13 GOST 5632-72 (STRENGTH CLASS 8.8) / USED ON CБ 20-18-201, CБ 20-18-202
ISSUE	DATE	NATURE OF AMENDMENTS	
DRN m.Ramchandra		SCALE:- 1:1 DIMENSIONS IN mm	CONTROLLERATE OF QUALITY ASSURANCE (HEAVY VEHICLES) AVADI.
CHD		TOLERANCE ON DIMENSIONS UNLESS OTHERWISE STATED IS 2102-69	TITLE BOLT M10X20
TCD m.Ramchandra		ALL THREADS CONFORM TO	D S CAT NUMBER / DRAWING NUMBER 20-56-10
APPD S.d.			
DATE 27-03-96			
SIZE A4			

DRAWING NUMBER
СБ 20-18-215

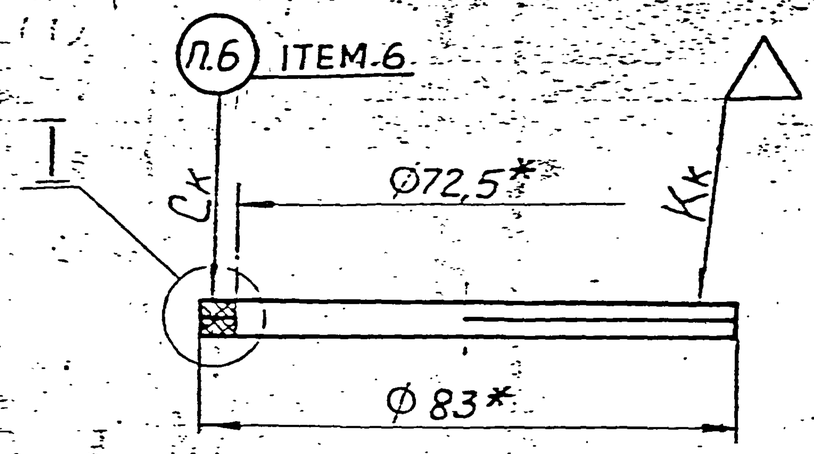

I SCALE 5:1

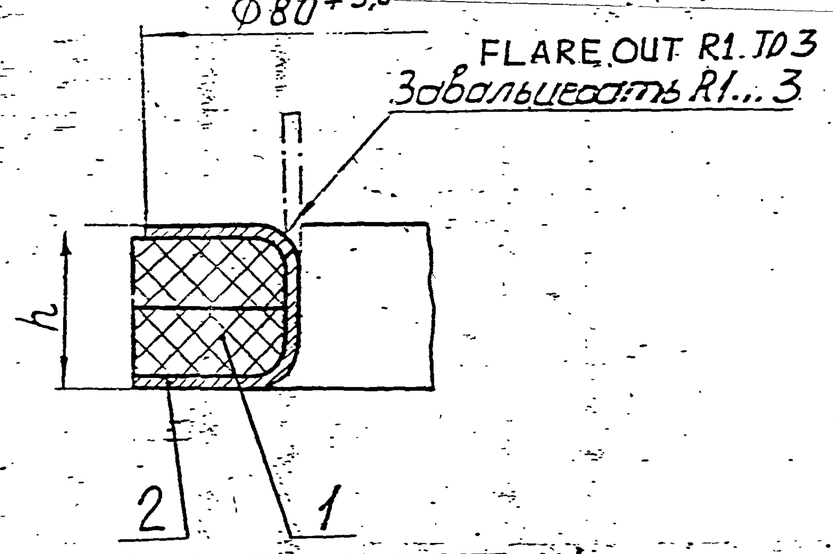

GROUP Группа	h мм
I	4,4-4,6
II	4,6-4,8
III	4,8-5,0
IV	5,0-5,4

1. CALIBRATE BY STATIC LOAD 490 ± 49N (50±5kg). MEASURE DIMENSION h UNDER SPECIFIED LOAD.
2. DIVIDE INTO GROUPS AS PER DIMENSION h IN ACCORDANCE WITH THE TABLE.
3. NO. DENTS, NICKS OR NOTCHES ARE TOLERATED ON BEARING SURFACES.
4. ACCEPT AGAINST STANDARD.
5. SELECT BY SETS OF 3 PIECES OF ONE DIMENSION GROUP.
6. MARK WITH TYPE Ц Р-3 GOST 2930-62.
7. * DIMENSIONS ARE GIVEN FOR REFERENCE.

PILOT SAMPLE SHOULD BE APPROVED BY A H S P BEFORE BULK PRODUCTION

EST. WT. 0.012 kg.

TO BE STAMPED OR MARKED WHERE INDICATED THUS # (LETTERS)

ALL SHARP EDGES AND CORNERS TO BE REMOVED UNLESS OTHERWISE STATED MACHINED CORNERS TO HAVE R OUT SIDE R INSIDE EQUIVALENT CHAMFERS ARE PERMISSIBLE

ISSUE	DATE	NATURE OF AMENDMENTS

DRN		
CHD		
TCD		
APPD	V. Romanov	
DATE	20-6-91	
SCALE	1:1	
DIMENSIONS IN mm		
TOLERANCE ON DIMNS UNLESS OTHERWISE STATED IS : 2102-69.		
ALL THREADS TO CONFORM TO		

MATERIAL:- [illegible]

USED ON СБ 20-18-201
СБ 20-18-00-4
СБ 20-18-202

CONTROLLERATE OF QUALITY ASSURANCE (HEAVY VEHICL AVADI

TITLE GASKET ASSY.

D S CAT NUMBER

DRAWING NUMBER СБ 20-18-215

SIZE A3

USED ON	ITEM	DRAWING NUMBER	D S CAT NUMBER	DESCRIPTION	NO. OFF	REMARKS
		C6 20-18-215		GASKET ASSY		
		& ITEM LIST				
C6 20-18-00-4 C6 20-18-201 C6 20-18-202	1	20-18-216		GASKET	2	
	2	20-18-240		SHELL	1	

ISSUE	DATE	NATURE OF AMENDMENTS	ISSUE	DATE	NATURE OF AMENDMENTS

DRN		CONTROLLERATE OF QUALITY ASSURANCE (HEAVY VEHICLES) AVADI		
CHD				
TCD		TITLE: GASKET. ASSY		
APPD		SHT. No. 1 OF 1	D S CAT NUMBER	ITEM LIST FOR C6 20-18-215
DATE	02-08-89			

ITEM	DRAWING NUMBER	D S CAT NUMBER	DESCRIPTION	NO. OFF	REMARKS
	CB 20-18-00-4 & ITEM LIST		EXHAUST MANIFOLD ~~ASSY~~		
1	CB 20-18-201 & ITEM LIST		R.H. EXHAUST MANIFOLD ASSY	1	
2.	CB 20-18-202 & ITEM LIST		L.H. EXHAUST MANIFOLD ASSY	1	
3.	CB 20-18-215 & ITEM LIST		GASKET ASSY	6	
4	20-18-241		RING	18	MAXIMUM OF QUANTITY
5	20-51-10		NUT M10	24	
6	353-15		LOCKING WASHER 11	24	

1A

ISSUE	DATE	NATURE OF AMENDMENTS	ISSUE	DATE	NATURE OF AMENDMENTS

DRN		CONTROLLERATE OF QUALITY ASSURANCE (HEAVY VEHICLES) AVADI		
CHD		TITLE: EXHAUST MANIFOLD ~~ASSY~~		
TED				
APPD		SHT No 1 OF 1	D S CAT NUMBER	ITEM LIST FOR CB 20-18-00-4
DATE	17-2-89			

DRAWING NUMBER
СБ 20-18-00-4

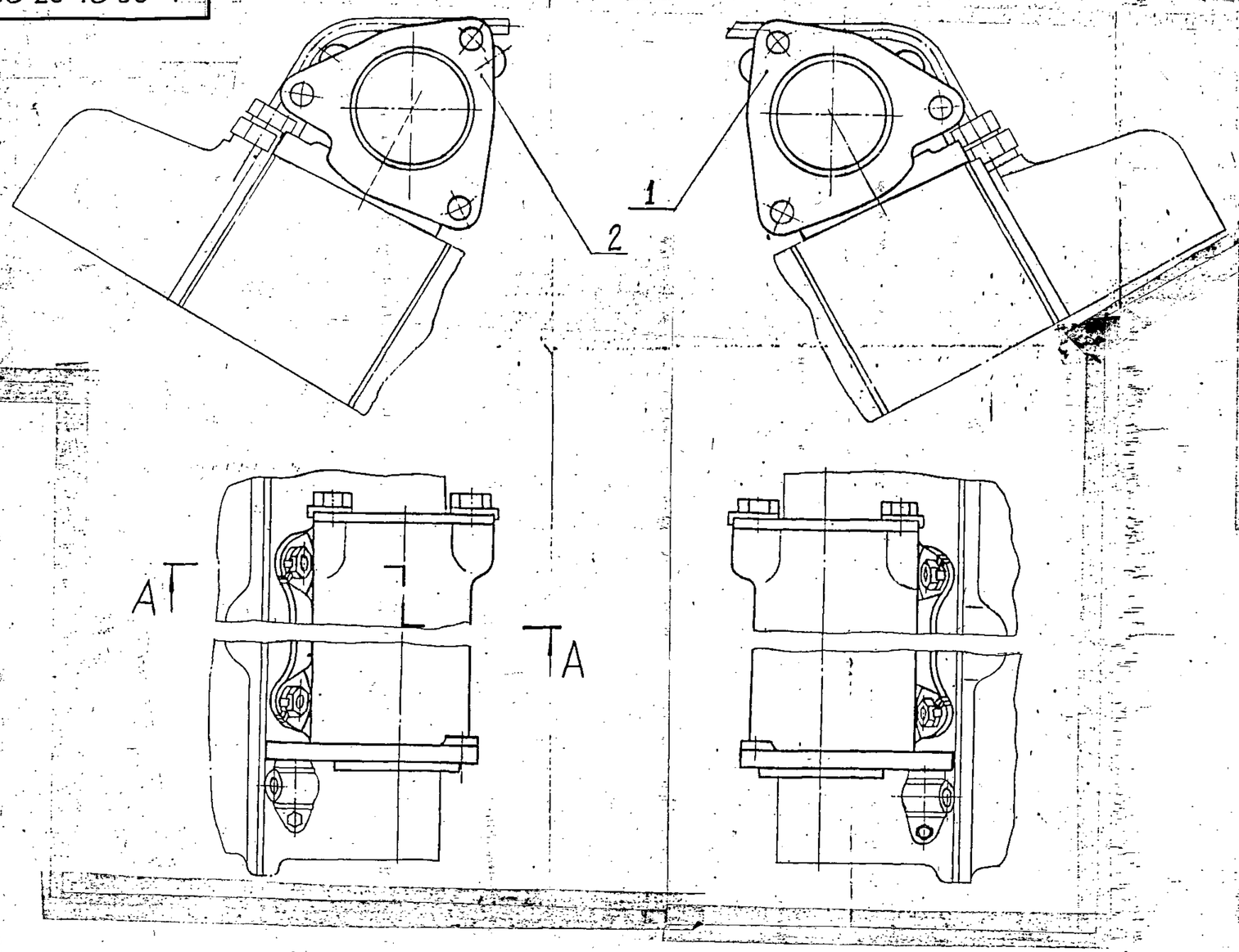

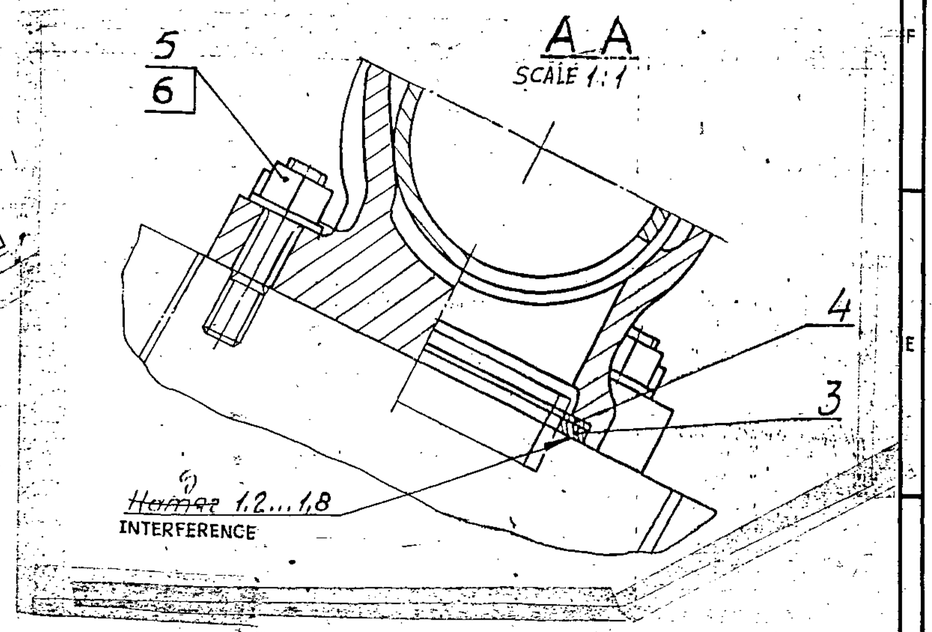

1. SELECT RINGS (REF. No. 4) IN ACCORDANCE WITH THE TABLE TO ENSURE INTERFERENCE ALONG GASKET (REF. No. 3)
2. BEFORE ASSEMBLING THE GASKET (REF. No. 2) AND EACH RING (REF. No. 4) SHOULD BE COATED ON BOTH SIDES WITH A MIXTURE OF VARNISH KO-815 GOST 11066-74 (90 TO 92 PARTS BY WEIGHT) AND POWDER ПАП-1 OR ПАП-2 GOST 5494-71 (8 TO 10 PARTS BY WIEGHT.)
3. TIGHTEN NUTS (REF. No. 5) WITH TORQUE ≈ 30 NM (3 kgf.m) OR WITH WRENCH WITH HANDLE L = 0.2 M BY HAND.
4. THE MANIFOLD FLANGES SHOULD FIT THE HEAD SURFACE. LOCAL CLEARANCE OF NOT MORE THAN 0.1 mm IS ALLOWED.

GROUP NO. OF GASKETS (REF. NO. 3)	NUMBER OF RINGS (REF. No. 4)
I	3 PCS
II	2 PCS
III	1 PC
IV	—

PILOT SAMPLE SHOULD BE APPROVED BY A H S P BEFORE BULK PRODUCTION.

EST. WT.	TO BE STAMPED OR MARKED WHERE INDICATED THUS # (LETTERS)
—	

ALL SHARP EDGES AND CORNERS TO BE REMOVED UNLESS OTHERWISE STATED MACHINED CORNERS TO HAVE R OUTSIDE R INSIDE EQUIVALENT CHAMFERS ARE PERMISSIBLE.

ISSUE	DATE	NATURE OF AMENDMENTS

DRN	
CHD	
TCD	
APPD	V. Romanov
DATE	7-9-91
SCALE :- 1:2	
DIMENSIONS IN mm.	
TOLERANCE ON DIMNS UNLESS OTHERWISE STATED IS 2102-69	
ALL THREADS TO CONFORM TO	

MATERIAL :- —

USED ON :- —

CONTROLLERATE OF QUALITY ASSURANCE (HEAVY VEHICLES)
A V A D I

TITLE
EXHAUST MANIFOLD

D S CAT NUMBER

DRAWING NUMBER
СБ 20-18-00-4

USED ON

CB.20-18-00-4

ITEM	DRAWING NUMBER	D S CAT NUMBER	DESCRIPTION	No. OFF	REMARKS
	CB.20-18-201		RH EXHAUST MANIFOLD ASSY.	1	
			ASSEMBLY UNITS		
1	CB.20-18-203		R.H.PIPE MANIFOLD ASSY	1	
2.	CB.20-18-215		GASKET ASSY	1	
			PARTS		
3.	20-18-211		R.H.EXHAUST MANIFOLD	1	
4	20-18-241		RING	3	MAX. No.
5.	20-56-10		BOLT M10 x 20	3	
6.	353-15		LOCKING WASHER-11	3	

ISSUE	DATE	NATURE OF AMENDMENTS	ISSUE	DATE	NATURE OF AMENDMENTS

DRN	[illegible]	CONTROLLERATE OF QUALITY ASSURANCE (HEAVY VEHICLES) AVADI		
CHD	[illegible]	TITLE: R.H. EXHAUST MANIFOLD ASSY		
TCD	[illegible]			
APPD	[illegible]	SHT. No. 1 OF 1	D S CAT NUMBER	ITEM LIST FOR CB 20-18-201
DATE	17-2-89			

DRAWING NUMBER
CБ 20-18-201

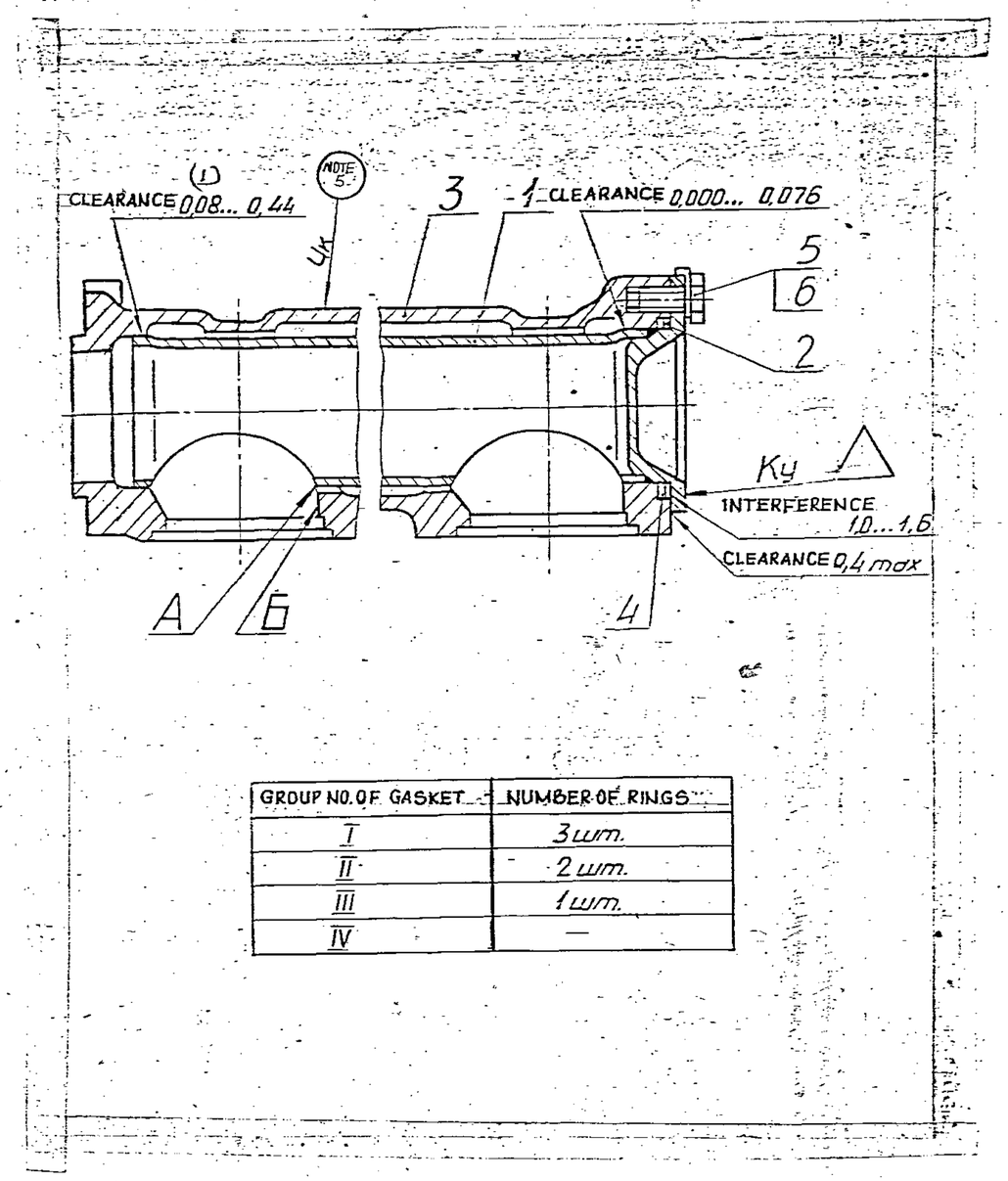

GROUP NO. OF GASKET	NUMBER OF RINGS
I	3 wm.
II	2 wm.
III	1 wm.
IV	—

1. PROJECTION OF SURFACE 'A' OVER SURFACE 'Б' IS NOT PERMITTED.
2. TO ENSURE INTERFERENCE ALONG GASKET (REF. NO 2) SELECT RINGS (REF. NO. 4.) IN ACCORDANCE WITH THE TABLE.
3. BEFORE ASSEMBLING THE GASKET (REF. NO. 2) AND EACH RING (REF. NO. 4.) SHOULD BE COATED ON BOTH SIDES WITH A MIXTURE OF VARNISH KO-815 GOST 11066-74 (90 TO 92 PARTS BY WEIGHT AND POWDER ПАП-1 OR ПАП-2 GOST 5494-71 (10 TO 8 PARTS BY WEIGHT)
4. PRESS-FIT THE PIPE (REF. NO. 1) AS FAR IT WOULD GO AND WITHOUT REMOVING LOAD, TIGHTEN THE BOLTS (REF. NO. 5.)
5. MARK WHEN ASSEMBLY 15 IS TO BE USED AS SPARES.

PILOT SAMPLE SHOULD BE APPROVED BY A H S P BEFORE BULK PRODUCTION.

EST. WT.	TO BE STAMPED OR MARKED WHERE INDICATED THUS # (LETTERS)
11.3 kg.	

ALL SHARP EDGES AND CORNERS TO BE REMOVED UNLESS OTHERWISE STATED MACHINED CORNERS TO HAVE R OUTSIDE R INSIDE EQUIVALENT CHAMFERS ARE PERMISSIBLE.

ISSUE	DATE	NATURE OF AMENDMENTS

DRN		MATERIAL :- —
CHD		USED ON :- CБ 20-18-00-4
TCD		
APPD	V. Ramaiah	CONTROLLERATE OF QUALITY ASSURANCE (HEAVY VEHICLES) AVADI
DATE	30-7-91	
SCALE :- 1:2		
DIMENSIONS IN mm.		TITLE R.H. EXHAUST MANIFOLD
TOLERANCE ON DIMNS UNLESS OTHERWISE STATED IS 2102-69		
ALL THREADS TO CONFORM TO		D S CAT NUMBER
		DRAWING NUMBER CБ 20-18-201

ISSUE 10-1927-78

SIZE A2

CB 20-18-00-4

USED ON	ITEM	DRAWING NUMBER	D S CAT NUMBER	DESCRIPTION	NO. OFF	REMARKS
		CB 20-18-202 & ITEM LIST		LH EXHAUST MANIFOLD ASSY		
	1	CB 20-18-204 & ITEM LIST		LH PIPE MANIFOLD ASSY	1	
	2	CB 20-18-215 & ITEM LIST		GASKET ASSY	1	
	3	20-18-212		LH EXHAUST MANIFOLD	1	
	4	20-18-241		RING	3	MAX. QNTY.
	5	20-56-10		BOLT M 10x20	3	
	6	353-15		LOCKING WASHER - II	3	

ISSUE	DATE	NATURE OF AMENDMENTS	ISSUE	DATE	NATURE OF AMENDMENTS

DRN		CONTROLLERATE OF QUALITY ASSURANCE (HEAVY VEHICLES) AVADI		
CHD		TITLE: L.H. EXHAUST MANIFOLD ASSY.		
TCD				
APPD				
DATE	17-2-89	SHT. No. 1 OF 1	D S CAT NUMBER	ITEM LIST FOR 20-18-202

DRAWING NUMBER
СБ 20-18-202

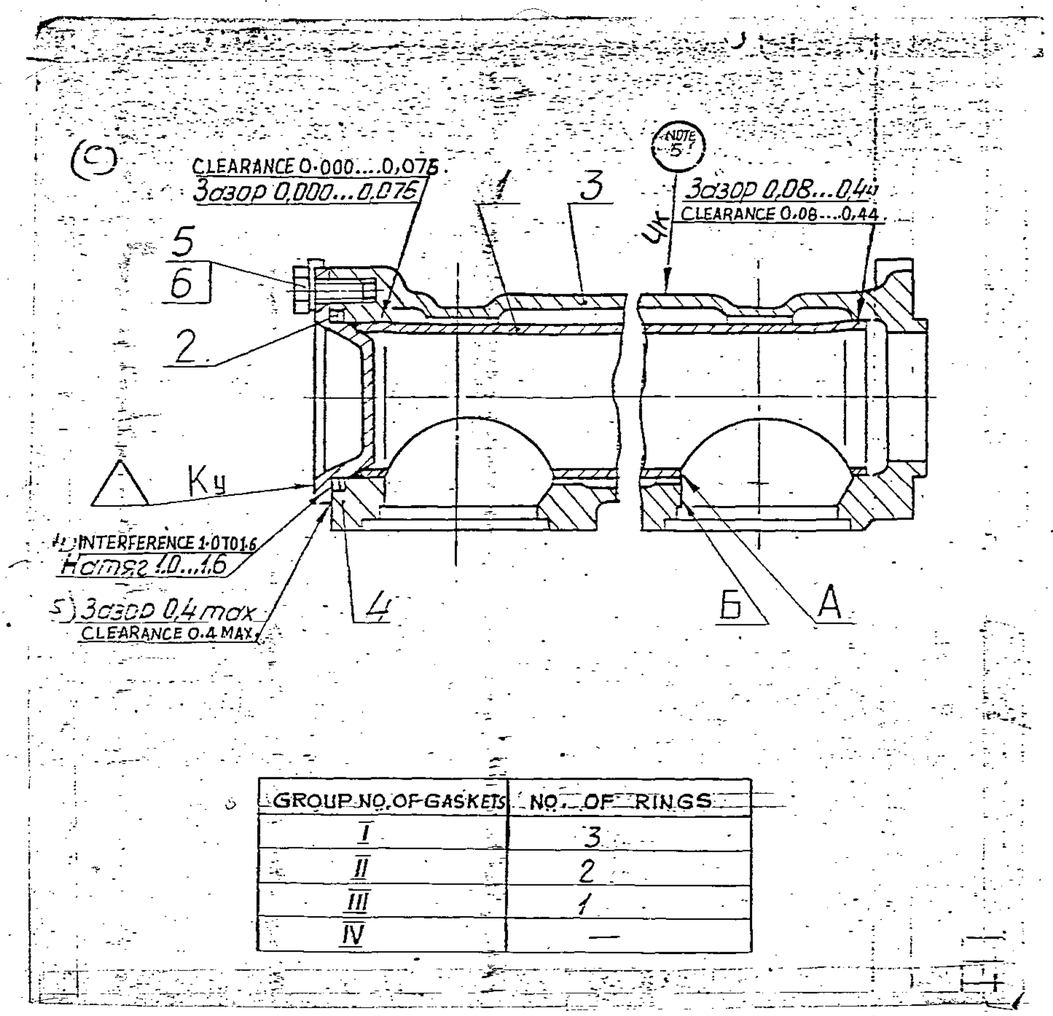

GROUP NO. OF GASKETS	NO. OF RINGS
I	3
II	2
III	1
IV	—

1. PROJECTION OF SURFACE 'A' OVER SURFACE 'Б' IS NOT ALLOWED.
2. TO ENSURE INTERFERENCE ALONG THE GASKET (REF. No. 2) SELECT RINGS (REF. No. 4) IN ACCORDANCE WITH THE TABLE.
3. BEFORE ASSEMBLING THE GASKET (REF. No. 2) AND EACH RING (REF. No. 4) SHOULD BE COATED ON BOTH SIDES WITH A MIXTURE OF VARNISH КО-815, GOST 11066-74 (90 TO 92 PARTS BY WEIGHT) AND POWDER ПАП-1 OR ПАП-2 GOST 5494-71 (10 TO 8 PARTS BY WIEGHT.)
4. PRESS FIT THE PIPE (REF. No. 1) AS FOR AS IT WOULD GO AND WITHOUT REMOVING LOAD, TIGHTEN THE BOLTS (REF. No. 5)
5. MARK WHEN THE ASSEMBLY IS TO BE USED AS SPARES.

PILOT SAMPLE SHOULD BE APPROVED BY A H S P BEFORE BULK PRODUCTION.

EST. WT.	TO BE STAMPED OR MARKED WHERE INDICATED THUS # (LETTERS)
11.3 Kg.	

ALL SHARP EDGES AND CORNERS TO BE REMOVED UNLESS OTHERWISE STATED MACHINED CORNERS TO HAVE R OUTSIDE R INSIDE EQUIVALENT CHAMFERS ARE PERMISSIBLE.

ISSUE	DATE	NATURE OF AMENDMENTS

DRN		
CHD		
TCD		
APPD	V. Romanov	
DATE	27-6-91	
SCALE :- 1:2		
DIMENSIONS IN mm.		
TOLERANCE ON DIMNS UNLESS OTHERWISE STATED IS 2102-69		
ALL THREADS TO CONFORM TO		

MATERIAL :- —

USED ON :- СБ 20-18-00-4

CONTROLLERATE OF QUALITY ASSURANCE (HEAVY VEHICLES)
A V A D I

TITLE
L.H. EXHAUST MANIFOLD ASSY.

D S CAT NUMBER

DRAWING NUMBER СБ 20-18-202

SIZE A2

USED ON	ITEM	DRAWING NUMBER	D S CAT NUMBER	DESCRIPTION	No. OFF	REMARKS
CБ.20-18-201		CБ.20-18-203		R.H.PIPE MANIFOLD ASSY		
	1.	20-18-209		COVER	1	
	2.	20-18-213		MANIFOLD PIPE	1	

ISSUE	DATE	NATURE OF AMENDMENTS	ISSUE	DATE	NATURE OF AMENDMENTS

DRN	[signature]	CONTROLLERATE OF QUALITY ASSURANCE (HEAVY VEHICLES) AVADI.		
CHD	[signature]	TITLE: R.H.PIPE MANIFOLD ASSY		
TCD	[signature]			
APPD	[signature]	SHT. No. 1 OF 1	D S CAT NUMBER	ITEM LIST FOR CБ 20-18-203
DATE	17-2-89			

DRAWING NUMBER
СБ 20-18-203

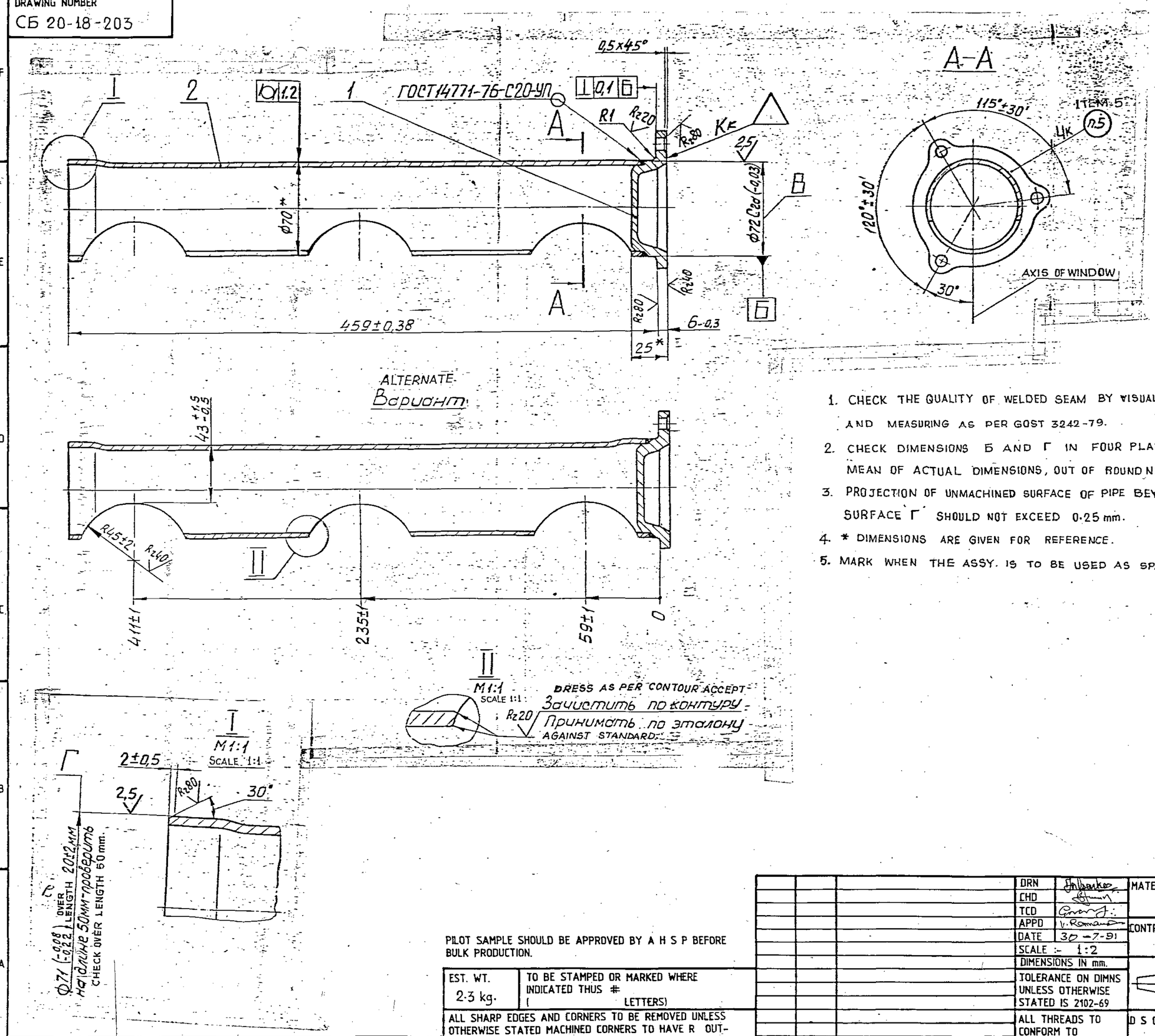

1. CHECK THE QUALITY OF WELDED SEAM BY VISUAL INSPECTION AND MEASURING AS PER GOST 3242-79.
2. CHECK DIMENSIONS Б AND Г IN FOUR PLANES FIND IT AS AN ARITHMETIC MEAN OF ACTUAL DIMENSIONS, OUT OF ROUNDNESS SHOULD NOT EXCEED 0·2mm.
3. PROJECTION OF UNMACHINED SURFACE OF PIPE BEYOND MACHINED SURFACE Г SHOULD NOT EXCEED 0·25 mm.
4. * DIMENSIONS ARE GIVEN FOR REFERENCE.
5. MARK WHEN THE ASSY. IS TO BE USED AS SPARES.

PILOT SAMPLE SHOULD BE APPROVED BY A H S P BEFORE BULK PRODUCTION.

EST. WT.	TO BE STAMPED OR MARKED WHERE INDICATED THUS # (LETTERS)
2·3 kg.	

ALL SHARP EDGES AND CORNERS TO BE REMOVED UNLESS OTHERWISE STATED MACHINED CORNERS TO HAVE R OUTSIDE R INSIDE EQUIVALENT CHAMFERS ARE PERMISSIBLE.

ISSUE	DATE	NATURE OF AMENDMENTS

DRN	Ghibenko	MATERIAL :- —
CHD		USED ON :- СБ 20-18-201
TCD		
APPD	V. Romanov	CONTROLLERATE OF QUALITY ASSURANCE (HEAVY VEHICLES) AVADI
DATE	30-7-91	
SCALE :-	1:2	
DIMENSIONS IN mm.		TITLE R.H. PIPE MANIFOLD
TOLERANCE ON DIMNS UNLESS OTHERWISE STATED IS 2102-69		
ALL THREADS TO CONFORM TO		D S CAT NUMBER / DRAWING NUMBER СБ 20-18-203

ISSUE 18-1638-81

SIZE A2

ITEM	DRAWING NUMBER	DSA NUMBER	DESCRIPTION	No OFF	REMARKS
	CB 20-18-204		L.H. PIPE MANIFOLD ASSY.		
			PARTS		
1	20-18-210		COVER	1	
2	20-18-213		MANIFOLD PIPE	1	

ISSUE	DATE	NATURE OF AMENDMENTS	ISSUE	DATE	NATURE OF AMENDMENTS

7

DRN	[illegible]	CONTROLLERATE OF QUALITY ASSURANCE (HEAVY VEHICLES) AVADI		
CHD	[illegible]	TITLE L.H.PIPE MANIFOLD ASSY		
TCD	[illegible]			
APPD	[illegible]			
DATE	17-2-89	SHT No 1 OF 1	DSCAT NUMBER	ITEM LIST FOR CB 20-18-204

DRAWING NUMBER
СБ 20-18-204

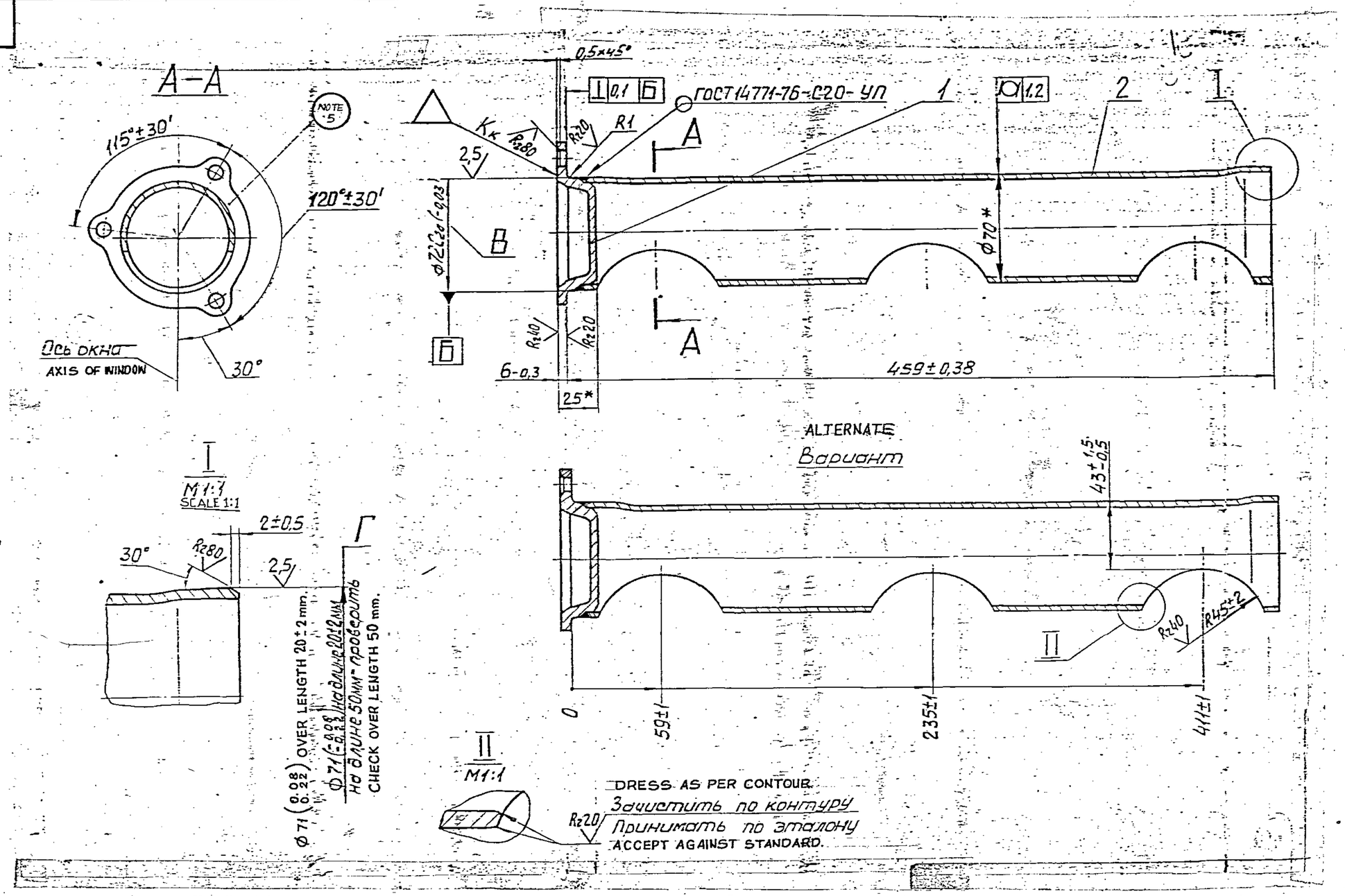

1. CHECK QUALITY OF WELDED SEAM BY VISUAL INSPECTION AND MEASURING AS PER GOST 3242-79
2. CHECK DIMENSIONS В AND Г IN FOUR PLANES AND FIND IT AS ON ARITHMETIC MEAN OF ACTUAL DIMENSIONS. OUT OF ROUNDNESS SHOULD NOT EXCEED 0.2 mm.
3. UNMACHINED SURFACE OF PIPE MAY PROJECT BEYOND MACHINED SURFACE Г BY NOTMORE THAN 0.25 mm.
4. * DIMENSIONS ARE GIVEN FOR REFERENCE.
5. MARK WHEN THE ASSEMBLY IS TO BE USED AS SPARES.

PILOT SAMPLE SHOULD BE APPROVED BY A H S P BEFORE BULK PRODUCTION.

EST. WT.	TO BE STAMPED OR MARKED WHERE INDICATED THUS # (LETTERS)
2.3 kg.	

ALL SHARP EDGES AND CORNERS TO BE REMOVED UNLESS OTHERWISE STATED MACHINED CORNERS TO HAVE R OUTSIDE R INSIDE EQUIVALENT CHAMFERS ARE PERMISSIBLE.

ISSUE	DATE	NATURE OF AMENDMENTS

DRN		MATERIAL :- —
CHD		USED ON :- СБ 20-18-202
TCD		
APPD	V. Romanov	CONTROLLERATE OF QUALITY ASSURANCE (HEAVY VEHICLES) AVADI
DATE	31-7-91	
SCALE :- 1:2		
DIMENSIONS IN mm.		TITLE L.H. PIPE MANIFOLD
TOLERANCE ON DIMNS UNLESS OTHERWISE STATED IS 2102-69		
ALL THREADS TO CONFORM TO		D S CAT NUMBER
		DRAWING NUMBER СБ 20-18-204

Issue 20-1638-81

SIZE A2

USED ON
* *
Cb 3301-15-30
Cb 3320-00-33
Cb 3338-00-16
Cb 3301-15-44
Cb 337-100, Cb 310-44, Cb 3320-00-43
SB 20-13-00-9
SB 20-18-00-4
SB 20-18-201
SB 20-18-202
SB 20-06-01-5
SB 20-06-02-5
SB 20-34-00-1
SB 20-09-00-7
SB 20-11-00-6
(A) Cb 3336-00-11
COMMON TO V-92S2 & UTD-20 ENGINES

DRAWING NUMBER
353-15

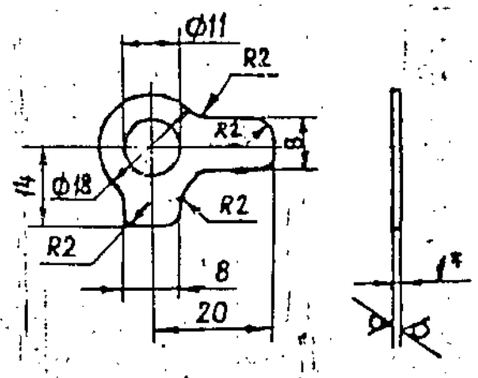

1. REQUIREMENTS PLACED UPON STAMPING ARE AS PER STANDARD B2050-16.
2. STRAIGHTEN AFTER STAMPING
3. COATING - ZINC ~~PLATED, 9 MICRONS THICK, OILED WITH REMOVAL~~ OF HYDROGEN EMBRITTLEMENT
4. * DIMENSION IS GIVEN FOR REFERENCE.

EXPLANATORY NOTE:

Material Quoted : Strip 08пс - M-2-1 GOST 503-71

Cold rolled low carbon steel strip of steel grade 08пс and condition of material - soft (M) with 2nd group of surface quality (Roughness parameter Ra ≤ 1.25 micron) and thickness = 1 mm.

Chemical composition (as per GOST 1050-74) %

C = 0.05 - 0.11, Mn = 0.35 - 0.65
Si = 0.05 - 0.17, Cr = 0.1 (max)
S = 0.040 (max), Cu = 0.25 (max)
P = 0.035 (max), Ni = 0.25 (max)

Mechanical Properties

Ultimate Tensile strength kgf/mm² = 32 - 45
Relative Elongation % = 17 (min)

(B) EQUIVALENT MATERIAL
Gr.O IS:513-1994

PILOT SAMPLE SHOULD BE APPROVED BY A H S P BEFORE BULK PRODUCTION

EST. WT. 0.0022 Kg.

TO BE STAMPED OR MARKED WHERE INDICATED THUS # (LETTERS)

ALL SHARP EDGES AND CORNERS TO BE REMOVED UNLESS OTHERWISE STATED MACHINED CORNERS TO HAVE R OUT SIDE R INSIDE EQUIVALENT CHAMFERS ARE PERMISSIBLE.

ISSUE	DATE	NATURE OF AMENDMENTS
B	17-3-10	4th Alt.Comm.Mt.Minutes Pt.No.1 Dt.26.10.09.
A	28.8.08	USED ON NUMBER ADDED

DRN
CHD
TCD
APPD
DATE 23-11-89
SCALE:- 1:1
DIMENSIONS IN mm
TOLERANCE ON DIMNS UNLESS OTHERWISE STATED IS:2102-69
ALL THREADS TO CONFORM TO

MATERIAL:- STRIP 08пс-M-2-1 GOST 503-71

USED ON * *

CONTROLLERATE OF QUALITY ASSURANCE (HEAVY VEHICLES) AVADI

TITLE LOCK WASHER 11

D S CAT NUMBER

DRAWING NUMBER 353-15

SIZE A3