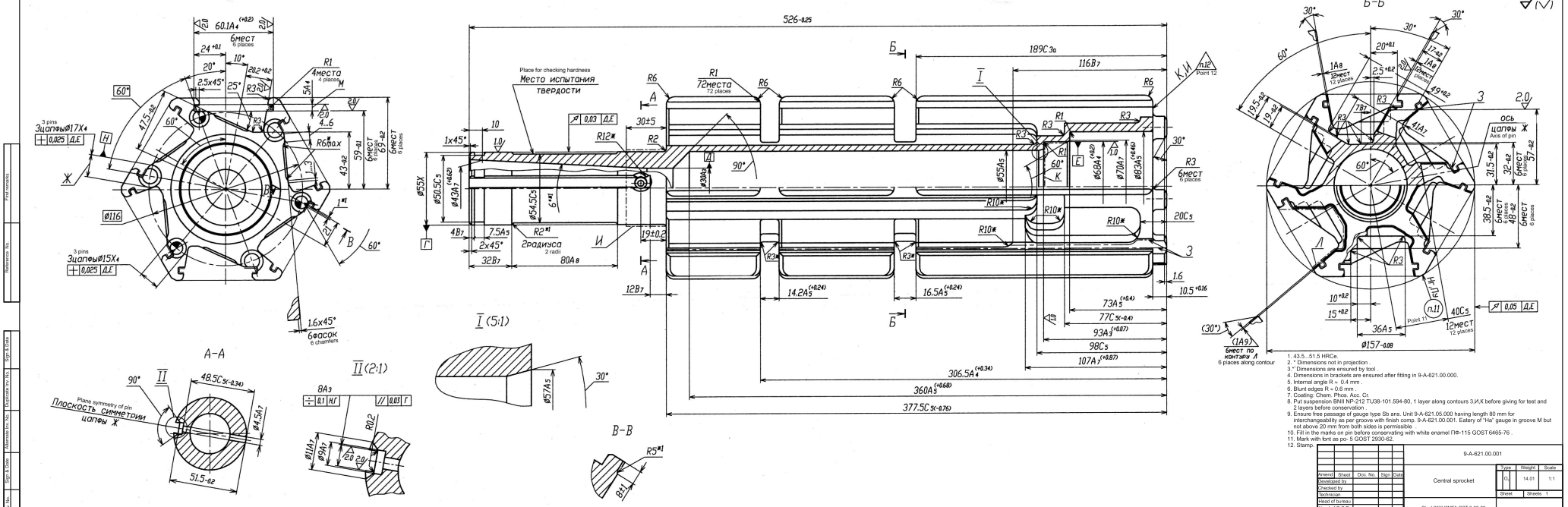

1. 43.5...51.5 HRCe.
2. * Dimensions not in projection .
3.*' Dimensions are ensured by tool .
4. Dimensions in brackets are ensured after fitting in 9-A-621.00.000.
5. Internal angle R = 0.4 mm .
6. Blunt edges R = 0.6 mm .
7. Coating: Chem. Phos. Acc. Cr.
8. Put suspension BNII NP-212 TU38-101.594-80, 1 layer along contours 3,И,К before giving for test and 2 layers before conservation .
9. Ensure free passage of gauge type Sb ans. Unit 9-A-621.05.000 having length 80 mm for interchangeability as per groove with finish comp. 9-A-621.00.001. Eatery of "Ha" gauge in groove M but not above 20 mm from both sides is permissible .
10. Fill in the marks on pin before conservating with white enamel ПФ-115 GOST 6465-76 .
11. Mark with font as po- 5 GOST 2930-62.
12. Stamp.

					9-A-621.00.001			
Amend	Sheet	Doc. No.	Sign	Date	Central sprocket	Type	Weight	Scale
Developed by						O.	14.01	1:1
Checked by						Sheet	Sheets 1	
Technician								
Head of bureau					Steel 30ХН2МFA OST 3-98-80			
Head of Q.C.D								
Approved by								

Format: A2X2