D.S.CAT. No. 1005-560438
5 SHTS SHT 1

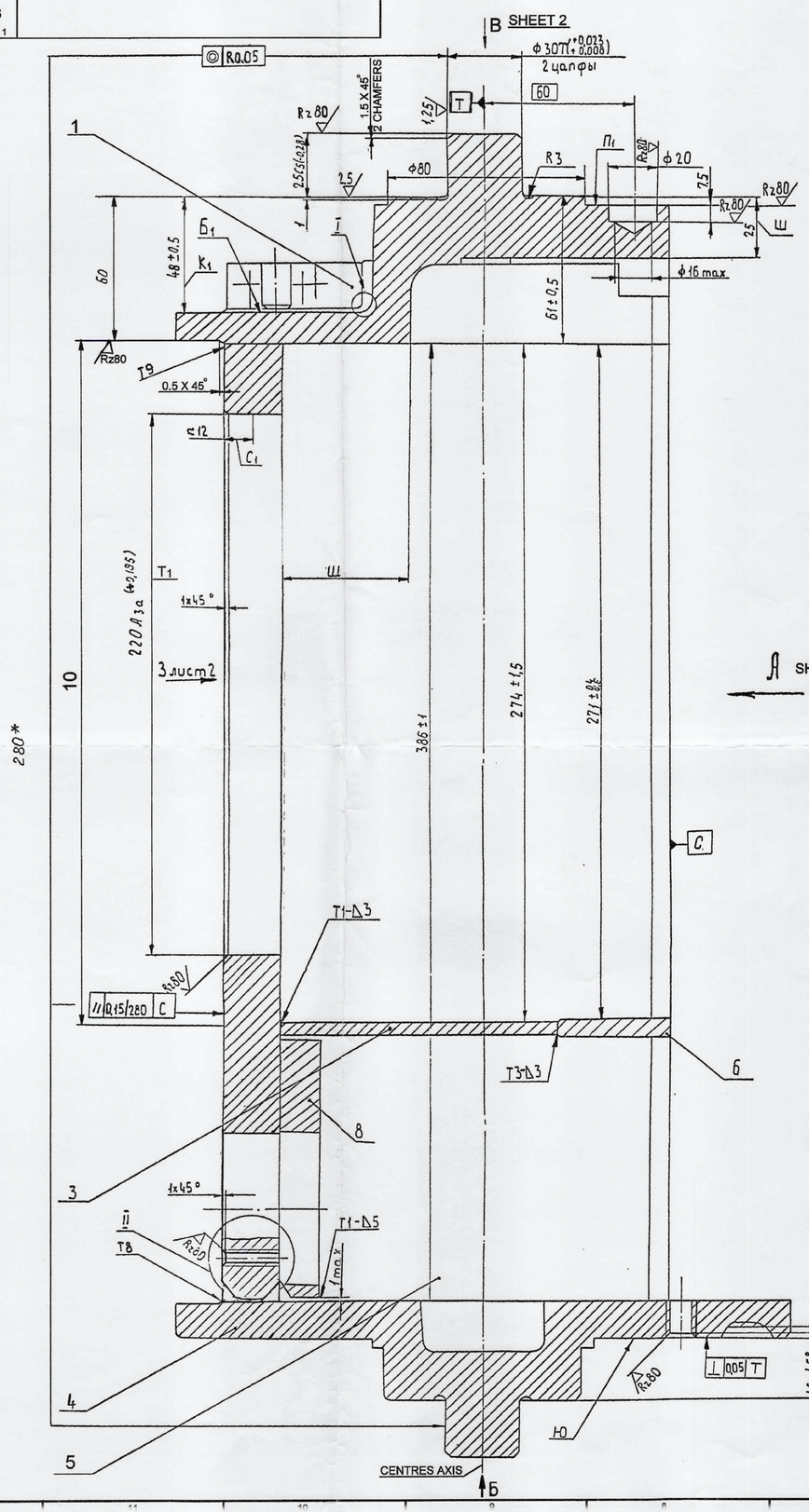

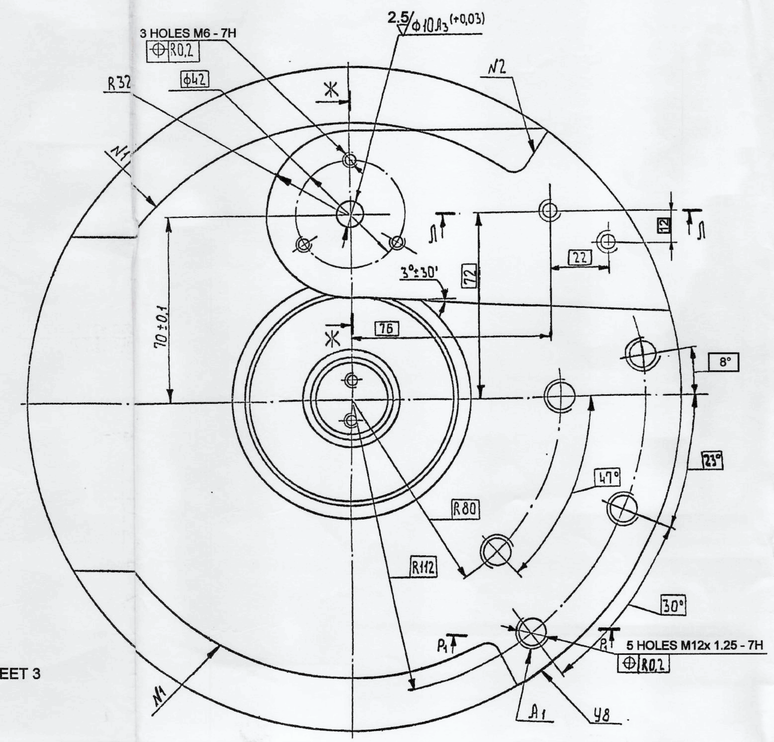

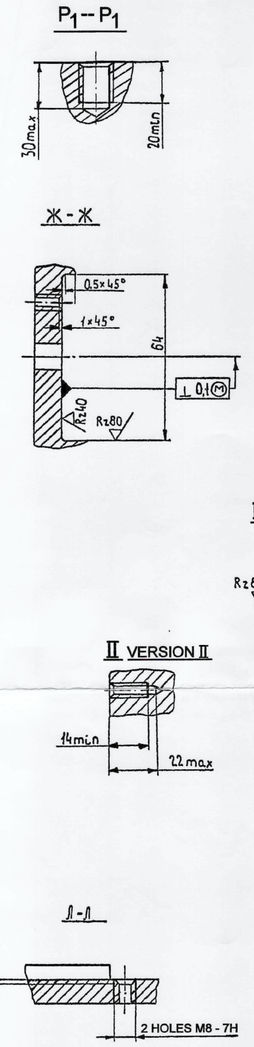

DIAGRAM FOR HEAT TREATMENT

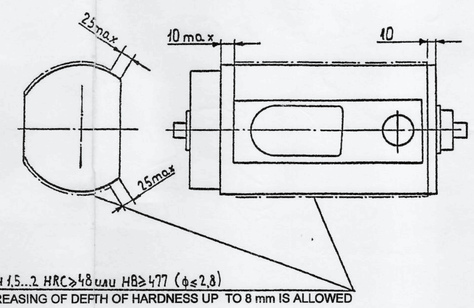

ТВ4 1,5...2 HRC≥48 или HB≥477 (ф≤2,8)
INCREASING OF DEPTH OF HARDNESS UP TO 8 mm IS ALLOWED

DATE	AUTHORITY	ZONE	AMENDMENTS	SIG AHSP	SIG. DO
25-5-09	19158-W		D.S.CAT.No. ADDED & NOMEN AMENDED.		
22-8-06			SCANNED & PRINTED WITHOUT CHANGE		

PREV DC Nos:- 16854-W & 18174-W DT 13-1-04

DRG SEALED:- 18174-W Dt. 22-09-95

DO CQA(W)

DRAWN:- | CHD:- | ASSY DRG:-
SCANNED:- PKA | CHD:- OPS | DATE:-
C/D'MAN | DO | AHSP | FOR CQA(W) | SCALE:- 1 : 1 | ESTD mass:- 42.2
MATERIAL:-
PROTECTIVE FINISH:-

SHIELD

CQA(W), JABALPUR

DESIGN No.
PART No. 675-51-сб162 СБ
5 SHTS SHT 1
DS CAT No. 5 SHTS. SHT. 1
1005-560438

D.S.CAT.No. 1005-560438
5 SHTS SHT 2

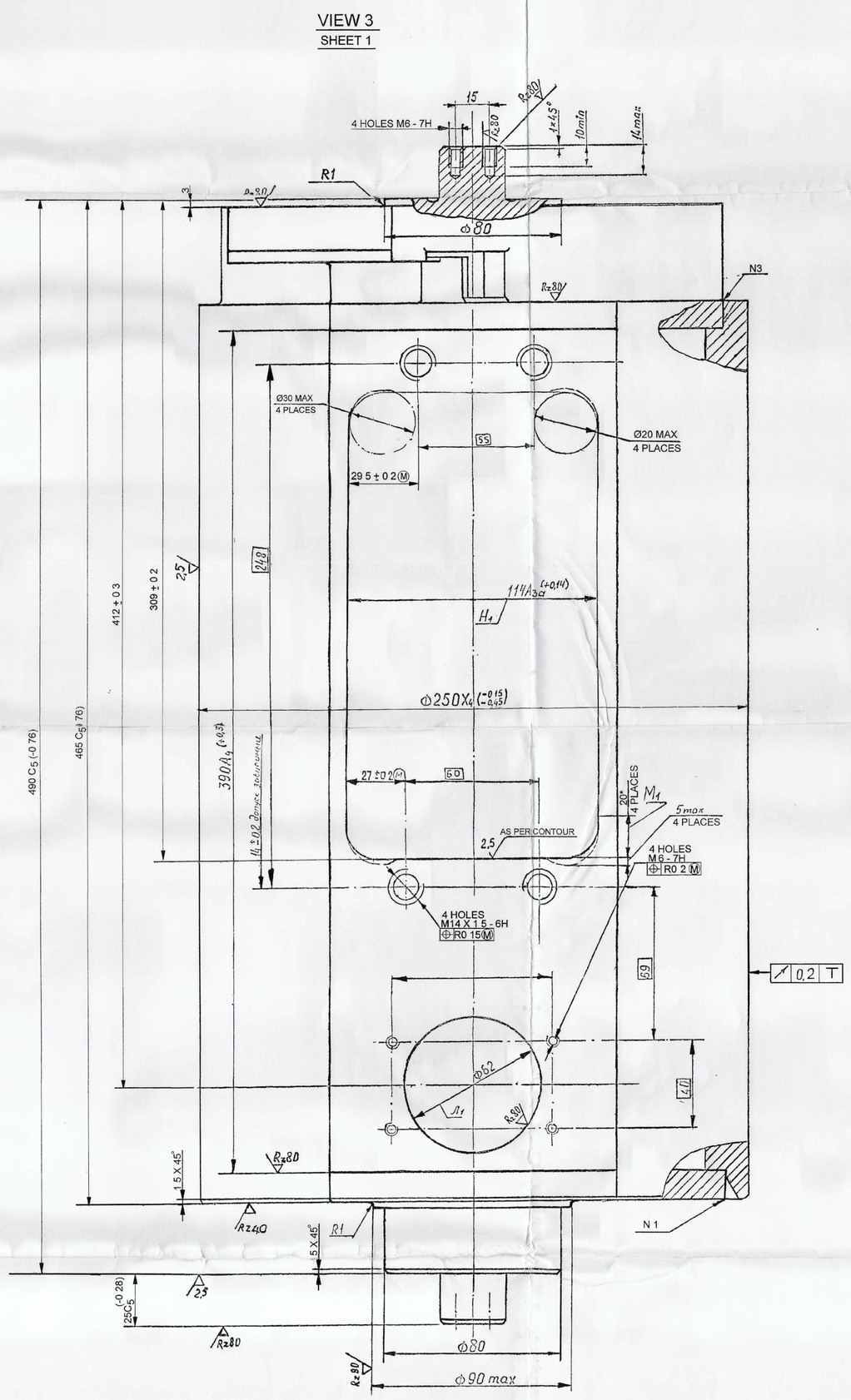

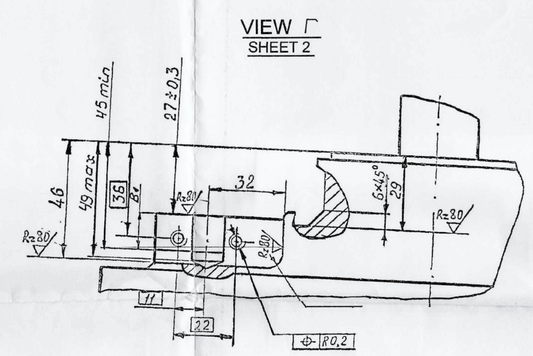

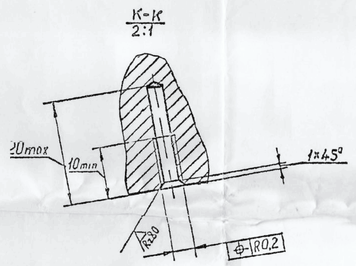

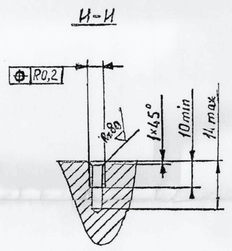

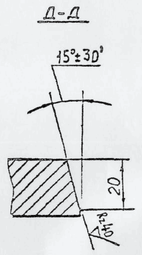

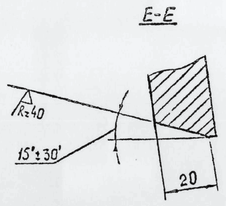

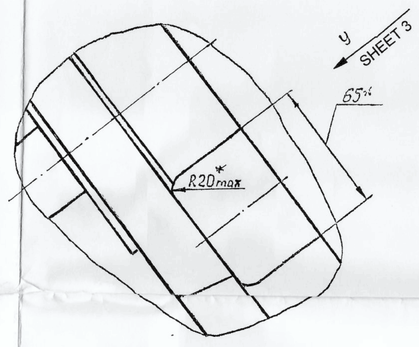

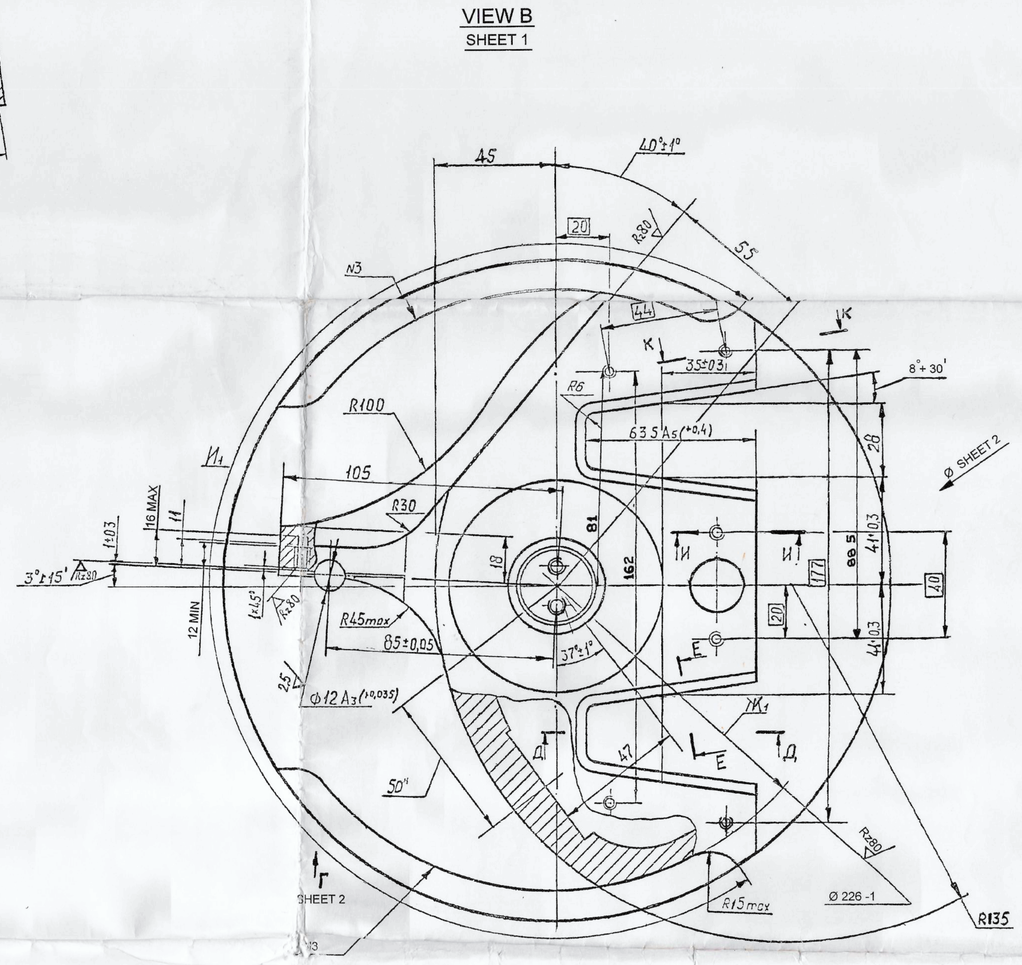

						DRAWN -	CHD -	ASSY DRG -
						SCANNED - PKA	CHD - A.D.K.	DATE -
26-5-09	19158-W		D.S CAT.No. ADDED & NOMEN AMENDED.			Ankazandy	AHSP	SCALE -
18-9-06			SCANNED & PRINTED WITHOUT CHANGE			G/DMAN	DO FOR CQA(W)	ESTD mass -
DATE	AUTHORITY	ZONE	AMENDMENTS	SIG AHSP	SIG DO	MATERIAL -		
PREV DC Nos - 16962-W & 18174-W DT 22-6-95						PROTECTIVE FINISH -		
DRG SEALED.- 18174-W DT 22-9-95								
					DO CQA(W)			

CQA(W), JABALPUR

DESIGN No

PART No 675-51-C8162C5
5 SHTS SHT 2

SHIELD

DS CAT No 1005-560438
5 SHTS. SHT. 2

D.S.CAT.No
1005 - 560438
5 SHTS SHT 3

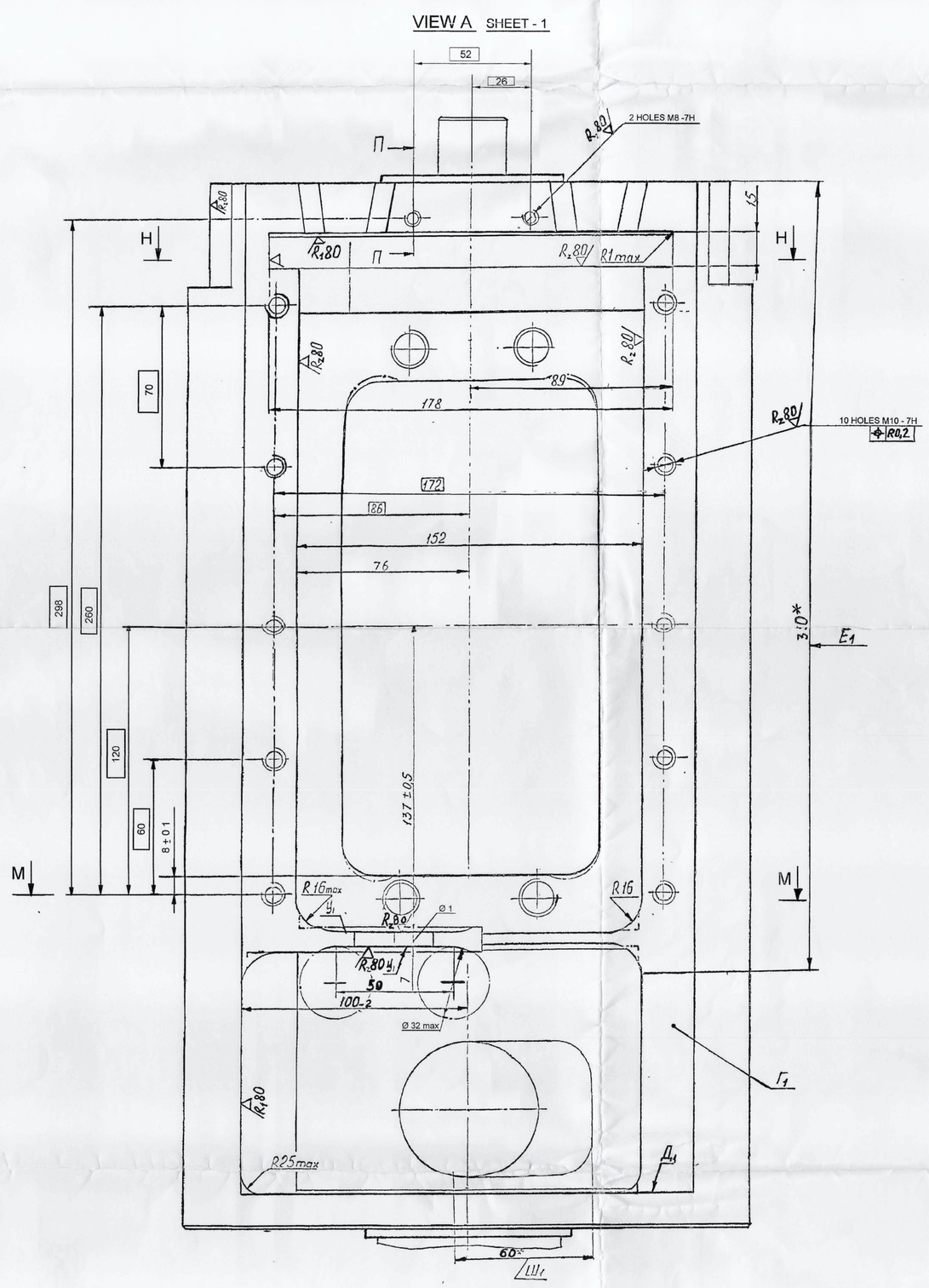

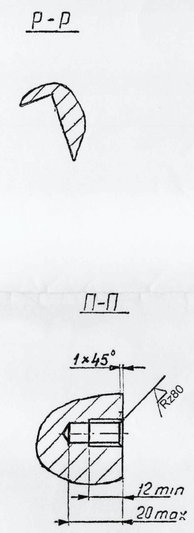

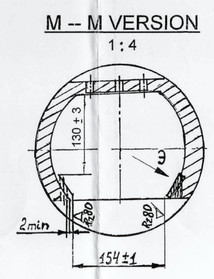

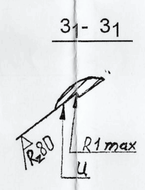

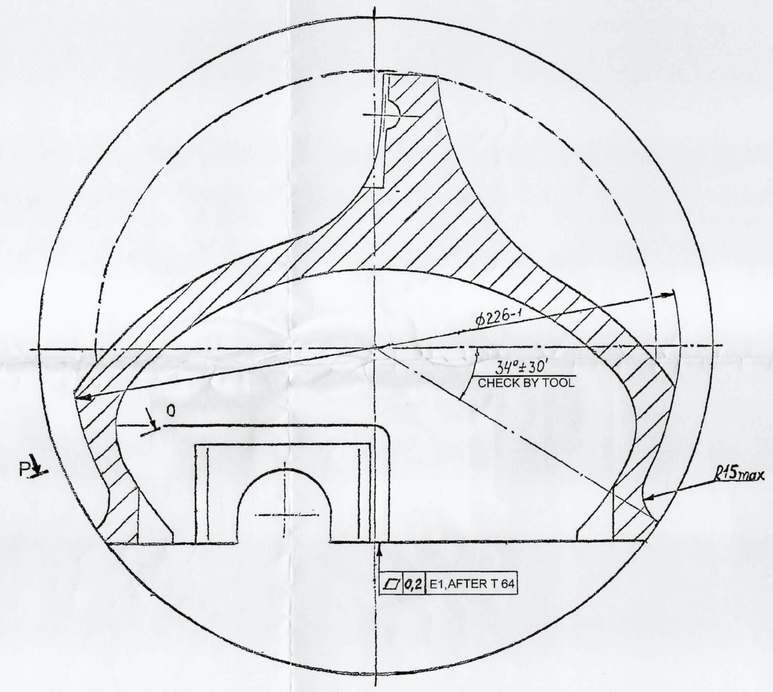

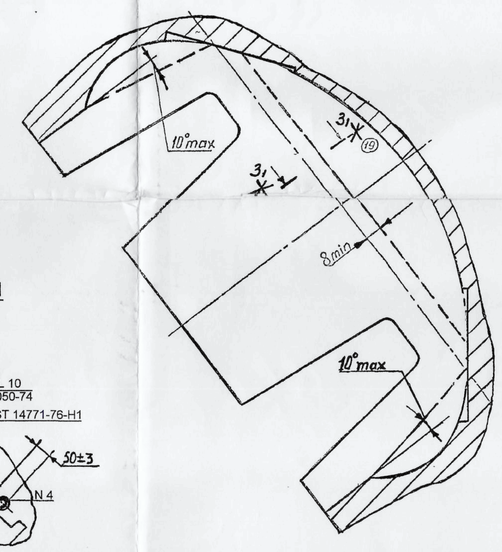

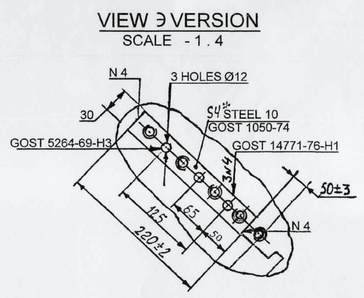

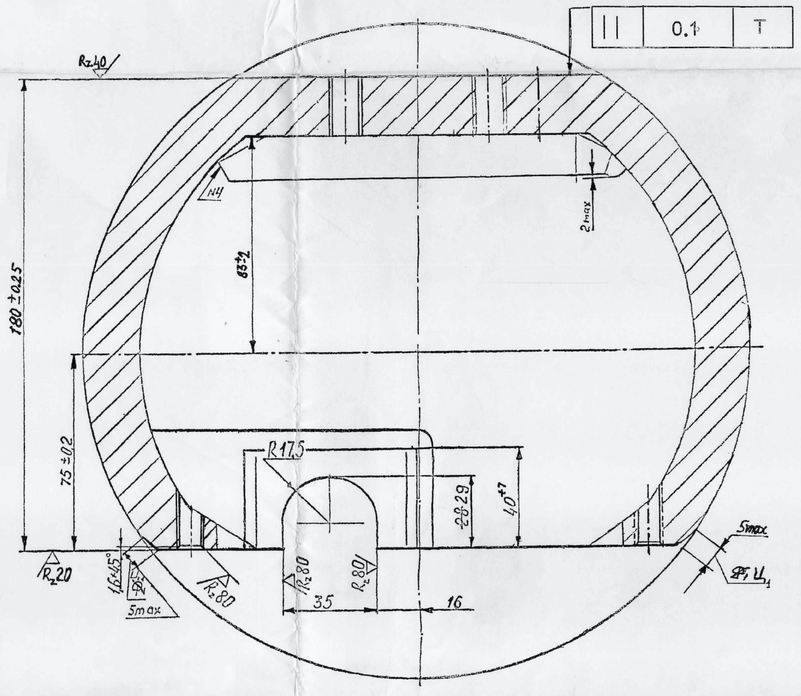

26-5-09	19158-W		D.S. CAT. No ADDED & WHEN AMENDED.				
23-9-06			SCANNED & PRINTED WITHOUT CHANGE				
DATE	AUTHORITY	ZONE	AMENDMENTS	SIG AHSP	SIG DO		

PREV DC Nos - 16854-W & 18174-W DT 22-9-95

DRG SEALED - 18174-W DT 22-9-95

DO CQA(W)

DRAWN -	CHD -		ASSY DRG -
SCANNED - PKA	CHD - O.P.S		DATE -
C/DMAN	DO	AHSP / FOR CQA(W)	SCALE -
MATERIAL -			ESTD mass -
PROTECTIVE FINISH -			

SHIELD

CQA(W), JABALPUR

DESIGN No

PART No 675-51-СБ 162 СБ
5 SHTS SHT 3

DS CAT No
1005 - 560438
5 SHTS. SHT. 3

SHIELD
675-51-CБ162 CБ

5-SHTS.
SHT-4

TECHNICAL NOTES:-

1. PERFORM WELDS ACCORDING TO STATE STANDARD GOST 14771-76 WITH WIRE CB 10ГСМТ, GOST 2246-70 IN THE CARBON DIOXIDE MEDIUM; IN THIS CASE MAKE WELDS 1,2,3 AT POINTS OF EDGE PREPARATION OF PARTS TO BE WELDED TOGETHER
2. UNSPECIFIED LIMIT DEVIATIONS OF SIZES OBTAINED AS A RESULT OF REMOVING THE LAYER OF METAL ARE AS FOLLOWS; HOLES ACCORDING TO A_7; SHAFTS ACCORDING TO B_7; OTHER VALUES ACCORDING TO CM_8.
3. ELECTROLESSLY PHOSPHATE COATING WITH SUBSEQUENT CHROMATE TREATMENT AND OILING
4. MAINTAIN SIZE III AT SURFACE II BY A THICKENED SHORT DASH LINE (VIEW Y). CUTS NOT EXCEEDING 0·5 mm ARE PERMISSIBLE ON SURFACE II.
5. AN AUXILIARY HOLE ⌀15 mm IS PERMISSIBLE ON SURFACE 10 AT THE AREA OF HOLES A_1 OR ON SURFACE II_1.
6. MAKING THE PART ACCORDING TO THE DASH-AND-DOT LINE IS PERMISSIBLE.
7. HEAT TREATMENT OF PART 5, AS WELL AS CHECKING THE PART FOR HARDNESS IS TO BE PERFORMED IN COMPLIANCE WITH THE DIAGRAM AND ACCORDING TO DIAGRAM 675-CБ3 ДB6
8. BLACK SPOTS ARE PERMISSIBLE ON SURFACE Б1.
9. ADJUSTMENT OF PART 3 IN SITU IS PERMISSIBLE.
10. EITHER PARTIAL CUTTING OF SURFACE Г1 OR INCISION (NOT EXCEEDING 2 mm) OF SURFACE Д1 IS PERMISSIBLE.
11. * SIZE IS GIVEN FOR REFERENCE

CONT SHEET-5

DATE	AUTHORITY	ZONE	NATURE	SIG AHSP	SIG DO
26 5/09	19158-W		D.S. CAT. No ADDED & NOMEN AMENDED.		
24-1-90	16854-W		DRG SLD PROV		
22 9/95	18174-W		PROV SEALING CANCELLED & DRG SLD		
29-8-92			NEW POLY NEG PREPARED		

AMENDMENTS

DRG SEALED :- 18174-W
22-9-95 DO CQA(W)

SCALE:- | ESTD MASS:- | DATE

MATL:-

ASSY DRG-

CQA(W) JABALPUR

DRN:- | CHD:-

TCD:-PD SAMAD | CHD:-

CHIEF D MAN | DO

AHSP FOR CQA(W)

DESIGN No.

PART No
675-51-CБ162 CБ
SHT 4 OF 5

DS CAT No 5 SHTS. SHT. 4
1005 - 560438

675-51-C5-162-C5
SHT 5 OF 5

SHIELD

675-51-C5 162 C5

5 SHTS
SHT 5

12. CHECK SIZES K1, Ж1 ALONG ARC И1 BY TOOLS.
13. INCREASING OF SIZE H1 BY 0·3 mm. ABOVE THE TOLERANCE LIMIT IS PERMISSIBLE AT AREAS M1.
14. THE FOLLOWING DEFECTS DETECTED AFTER MACHINING THE WELDS ARE NOT TO BE CORRECTED:-
    a) GAS PORES SINGLE NOT EXCEEDING 2 mm. IN DIA AND 2 mm. IN DEPTH, NUMBERING BY 5 Pcs AT A LENGTH OF WELD UP TO 500 mm. AND 10 Pcs AT A LENGTH OF WELD EXCEEDING 500 mm. (THE DISTANCE BETWEEN PORES IS TO BE OF AT LEAST 50 mm.)
    b) SLAG INCLUSIONS NOT EXCEEDING 3×3 mm. IN SIZE UPTO 2 mm. IN DEPTH NUMBERING BY 4 Pcs AT A LENGTH OF WELD UPTO 500 mm. AND 10 Pcs AT A LENGTH OF WELD EXCEEDING 500 mm. (THE DISTANCE BETWEEN SLAG INCLUSIONS IS TO BE OF ATLEAST 50 mm.),
    c) LACKS OF FUSION IN THE WELD ROOT NOT EXCEEDING 1·5 mm WITH METAL THICKNESS UPTO 20 mm. OR 2 mm. WITH METAL THICKNESS EXCEEDING 20 mm.
15. THE DEFECTS EXCEEDING THE PERMISSIBLE VALUES INDICATED IN ITEM 14 BY 25 PERCENT ARE TO BE CORRECTED IN COMPLIANCE WITH STANDARD OST B-3-4302-80 WITH SUBSEQUENT LAPPING OF SURFACES ACCORDING TO THE DRAWING.
16. SIZES T1 AND H1 MAY BE CHECKED AT LENGTH C1; AT THE REMAINING LENGTH, LOSSENING OF SIZES UP TO 221 AND 115 mm., RESPECTIVELY IS PERMISSIBLE.
17. BLACK SPOT IS ALLOWED ON SURFACES У1. IN THIS CASE IT IS ALLOWED TO REDUCE THE DIMENSION Ø1 TO 0·5 mm ABOVE TOLERANCE.
18. BLACK SPOT IS ALLOWED ON SECTION Ц1.
19. DURING THE MACHINING OF HOLE Д1 CUTTING INTO PART REF No 8 IS ALLOWED.
20. LOOSE FIT COVER PLATE REF No. 8 TO CYLINDER REF No 5 NOT EXCEEDING 1·5 mm. IS ALLOWED.
21. IT IS NOT ALLOWED TO WELD ON SECTION Ц1 IN JOINT OF PARTS ITEMS 4 AND 8.

26-5-09	19158-W		D.S.CAT.No.ADDED & NOMEN AMENDED.		
13-2-96			PREV DC Nos. 16854-W, 18174-W & 18216-W/DT 31-1-96		
DATE	AUTHORITY	ZONE	NATURE	SIG AHSP	SIG DO

AMENDMENTS

C/D'MAN	ASSY DRG	CQA(W) JABALPUR	
DO	ESTD mass	DESIGN No.	
AHSP FOR CQA(W)	DATE	PART No SHT 5 OF 5 675-51-C5 162 C5	
DRG. SEALED DC No 18174-W DATE:- 22-9-95	SCALE		
	DRN	DS CAT No. 5 SHTS, SHT. 5 1005-560438	
	CHD		

TRACED	R.R. Thakur	DATE 13-2-96
CHD	G.P. Shukla	