OFB

THIS DRAWING/DOCUMENT CONTAINS COMPANY PROPRIETARY INFORMATION. USE OR DISCLOSURE IN WHOLE OR IN PART SHALL NOT BE MADE WITHOUT THE WRITTEN PERMISSION OF OFB

NOTE:
1. Chamfered 0.3x45°

केवल निविदा हेतु
सन्दर्भ माँग पत्र सं0 380146
दिनांक 23-04-2018

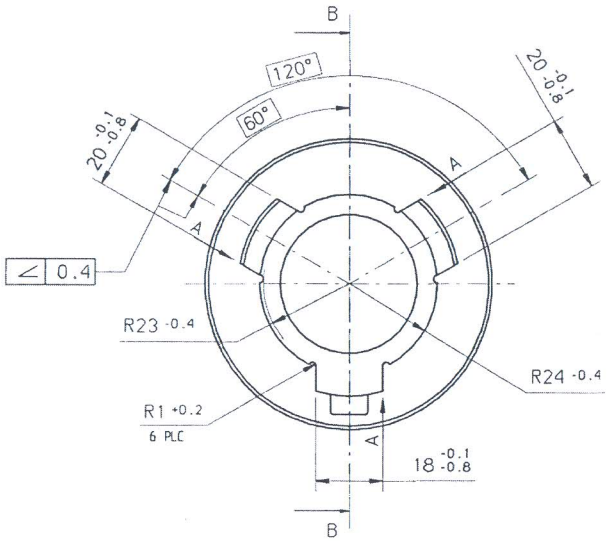

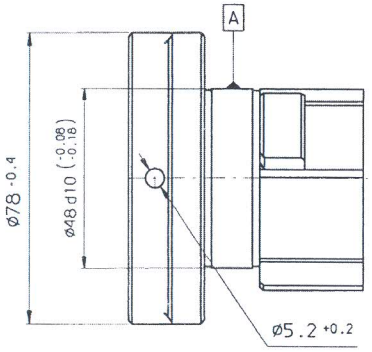

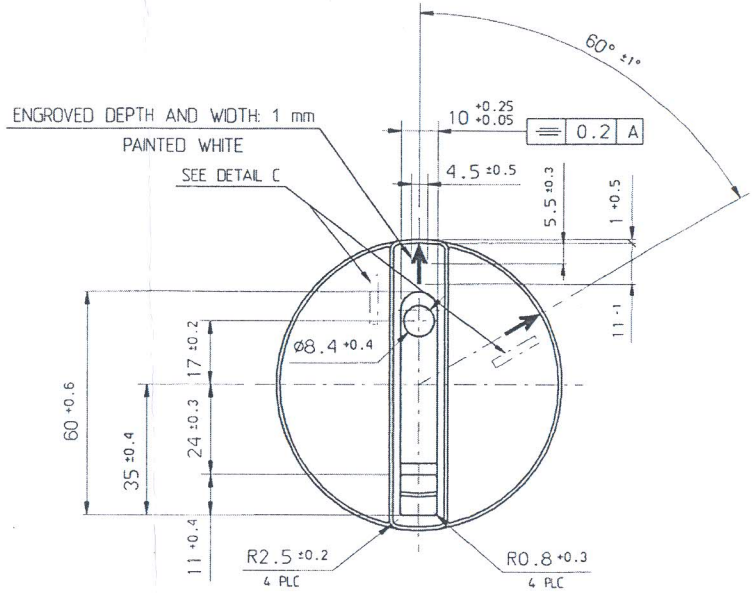

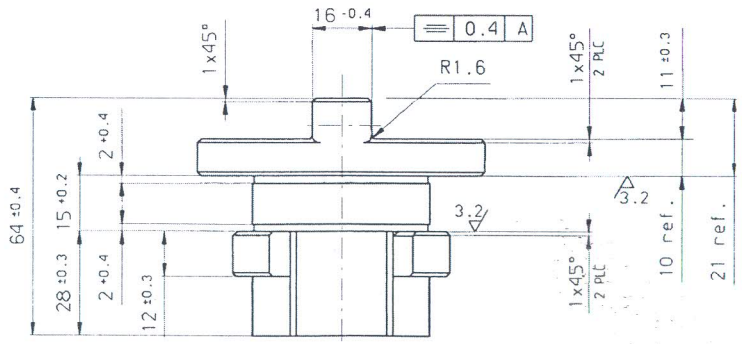

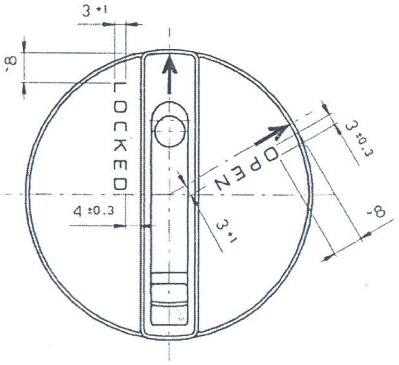

DETAIL C

ENGROVED DEPTH - 0.5
ENGOVED WIDTH - 0.7

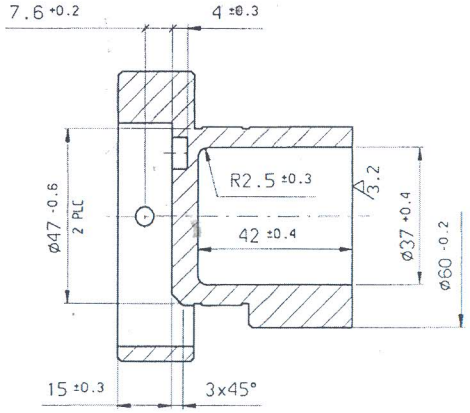

SECTION B-B

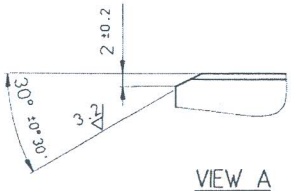

VIEW A
SCALE 2:1

DATE: 01.01.2007	ALTERNATE/ INDIGENOUS MATERIAL SPCN: BS: 3146: 1974 CLA-5 grade "A". The chemical Composition shall be C%=0.38-0.45, Si%=0.40(max), S%=0.035(max) P%=0.035(max) ,Cr%=0.90-1.20,Mo%=0.15-0.30. (REF: CQA(W) JABALPUR L.No. JB2402/CQAW:011 Dt. 12 JULY 2005)	66 JWM/CDD

6.3 (3.2)
MACHINING INSTRUCTIONS

UNSPECIFIED TOLERANCES FOR DIMENSIONS AND ANGLES
DIMENSIONS
ANGLES

HEAT TREATMENT: 28÷32 HRC

FINISH: PHOSPHATE COATING ACCORDING TO DDD-P-16232 TYPE M CL. 2

MATERIAL: 161-682-C

18914-W
Dt. 6-5-2005
DRAWING SEALED
CQA (W), JABALPUR

SHARANG 130/155MM_UG_OFB_SLB
PART NO.

UPDATED
Sh: 1
of: 1

ASSEMBLY 161-681 (176-8001)

1:1 (2:1) SCALE
A2 SIZE

NAME: BODY LOCK SAFETY

PREPD
CHD
JWM/DC
APPROVED
DC/DO
DIR/ODC

ORDNANCE DEVELOPMENT CENTRE, OFC, KANPUR

PART NO. 161-682

PART NO. 161-682

NOTES:

1. Casting according to spec.No 342 CLASS B
2. Unspecified radiuses are R1

केवल निविदा हेतु
मांग पत्र सं0 380146
दिनांक 23-04-2018

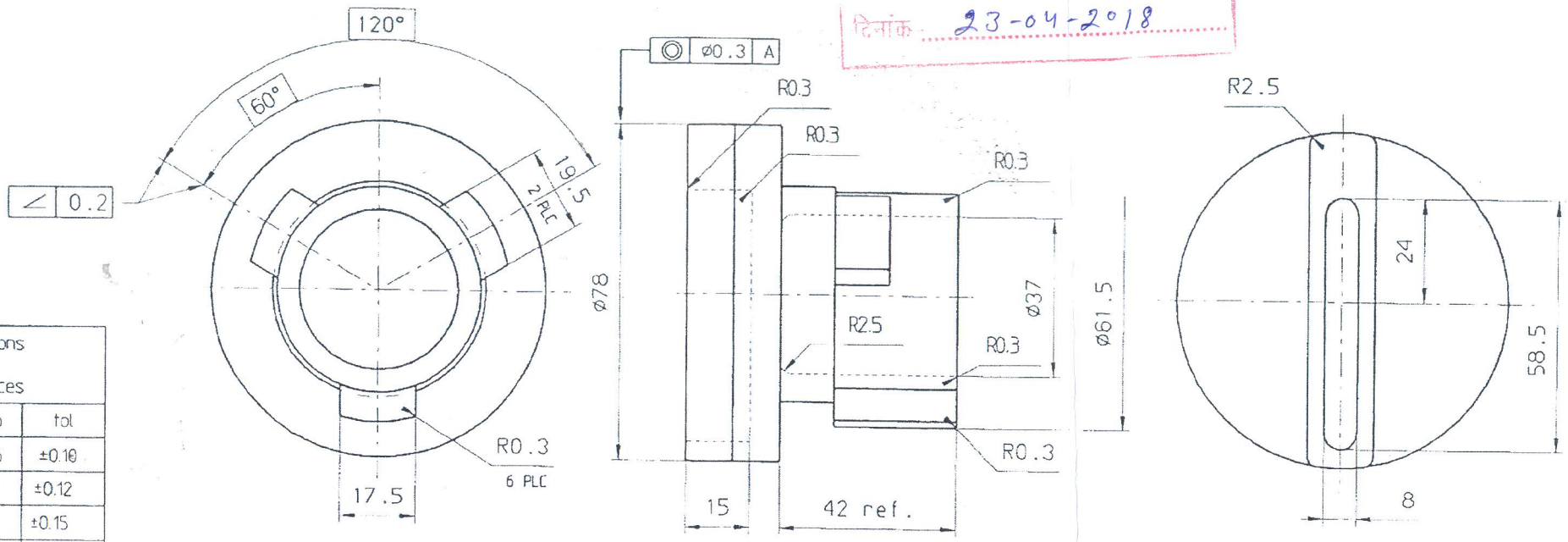

Dimensions without tolerances		
from	to	tol
	6	±0.10
6	10	±0.12
10	14	±0.15
14	18	±0.20
18	24	±0.25
24	30	±0.30
30	40	±0.37
40	50	±0.44
50	65	±0.52
65	80	±0.60

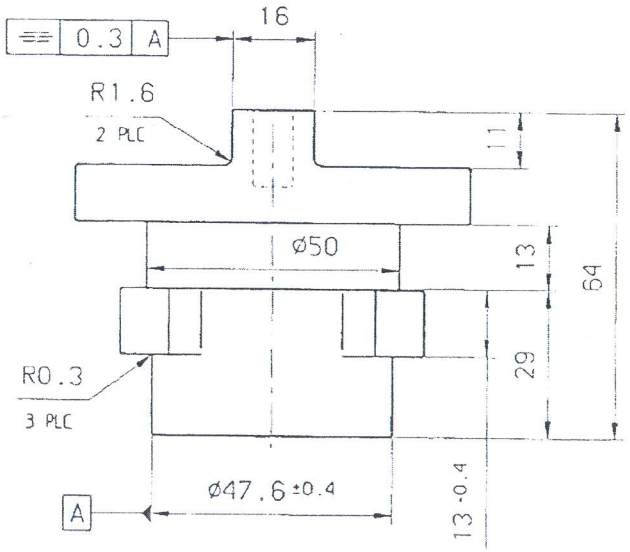

MACHINING INSTRUCTIONS	
UNSPECIFIED TOLERANCES FOR DIMENSIONS AND ANGLES	
DIMENSIONS	
ANGLES	
HEAT TREATMENT	28-32 HRc
FINISH	
MATERIAL	42CrMo4

for trade Only

ITEM	DESCRIPTION	NO OFF	MATERIAL	TREATMENT	REMARKS
SCALE NTS	COMPONENT	STDR DRG. NO. 161-682-C	FIELD GUN FACTORY KANPUR		
UNSPECIFIED TOLERANCES IS + 2000 MEDIUM					
2018	DATE	NAME	APPROVED		
DRN					
CHD					
TCD					
COMP					
APPROVED					
CHKSD					

LOCK CASTING

DRGNO 161-682-C

SHTS. 1 SHT. NO. 1