DRG. NO. GCF/50/39462

DRAWING CONVENTIONS CONFORM TO SP 46:1988
DIMNS. ARE IN mm. UNLESS OTHERWISE STATED.

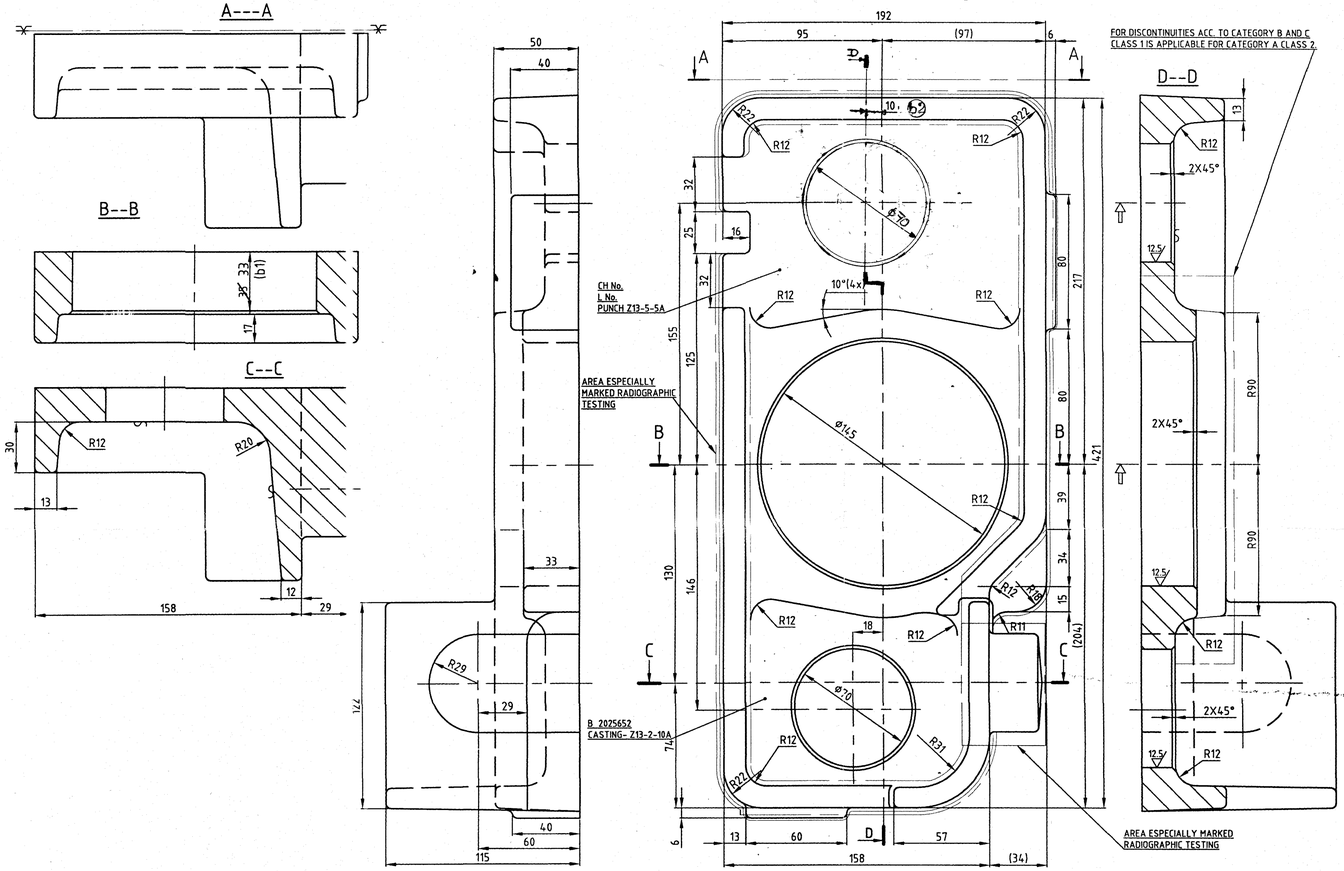

MATERIAL:- SIS 2225-24, WEIGHT- 14 Kg.

MATL.- IS:10343-1999, Gde 8Q, Cond 'QT' %S & %P TO STRICTED TO 0.035% EACH MAX.
TO ACHIEVE Rp0.2 = 600 Mpa MIN.,
Rm = 800-950 Mpa. El = 10%,
HB = 235-285

FOR COMPONENT SEE DRG. 2025634

PT.No.	NOMENCLATURE	No. OFF	MATERIAL	HARDNESS	STANDARD	SIZE	REMARKS
415/b2	REVIEWED, UPDATED					03.01.21	
	LOCATION OF HOLE Ø70						
54/b1	33 WAS 35				SK JAIN	17.02.17	
INDEX	AMENDMENTS				SIGN	DATE	

GEN. TOL. NOT SPECIFIED

LINEAR DIMENSIONS

0 – 6	±0.1
6 – 30	±0.2
30 – 120	±0.3
120 – 315	±0.5
315 – 1000	±0.8
1000-2000	±1.2

ANGULAR DIMENSIONS

0° – 10°	±1°
10° – 50°	±30'
50° – 120°	±20'
> – 120°	±10'

- UNMACHINED
- ▽ ROUGH
- ▽▽ SMOOTH
- ▽▽▽ FINISH

THE AREAS OTHER THEN SPECIFIED ARE TO BE TESTED FOR RADIOGRAPHIC LEVEL 3. ASTM E 446-78, CLASS 2. GROUP A,B AND C
GROUP D, E, F AND G ARE NOT ACCEPTED.
ONE TENSILE TEST FROM SEPARATELY CAST TESTPIESE FOR EACH CHARGE.
APPROPRIATE CASTING CLEARANCE TO BE APPLIED.
CASTING TOLERANCE ACCORDING TO SS 722 GTA 16-18.
MANUFACTURING SPECIFICATION A 2003 AND 0804092.

GABLE (CASTING) FOR 155MM DHANUSH

GUN CARRIAGE FACTORY, JABALPUR

FOR Sr. GM G.C.F.y.

2017	NAME	DATE	APPROVED
DRN.	SK JAIN	17.02.17	
CKD.			JWM/Shop
HOS/ODC			
SEC.	M/C		JWM/TR

SCALE NTS.
REF. DEM.
REF.DRG.No. 2025652

DRG. NO. GCF/50/39462

SHEET NO. OF SHEETS

DRG. No. GCF/50/40878

(FOR TRADE ACTION ONLY)

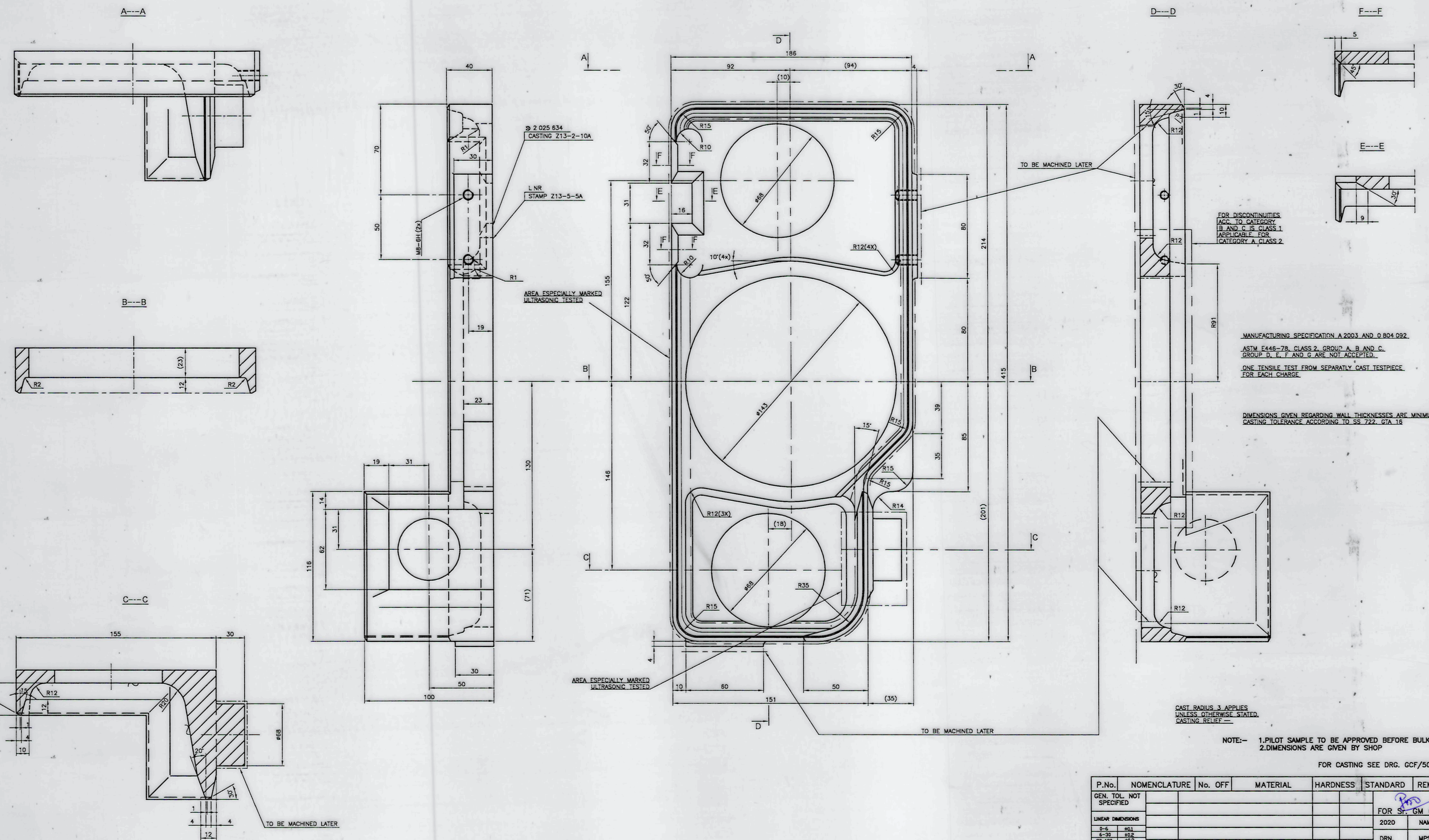

MANUFACTURING SPECIFICATION A 2003 AND 0 804 092

ASTM E446-78, CLASS 2, GROUP A, B AND C.
GROUP D, E, F AND G ARE NOT ACCEPTED.

ONE TENSILE TEST FROM SEPARATLY CAST TESTPIECE FOR EACH CHARGE

DIMENSIONS GIVEN REGARDING WALL THICKNESSES ARE MINIMUM CASTING TOLERANCE ACCORDING TO SS 722, GTA 16

CAST RADIUS 3 APPLIES UNLESS OTHERWISE STATED.
CASTING RELIEF —

NOTE:— 1.PILOT SAMPLE TO BE APPROVED BEFORE BULK SUPPLY.
2.DIMENSIONS ARE GIVEN BY SHOP

FOR CASTING SEE DRG. GCF/50/39462

P.No.	NOMENCLATURE	No. OFF	MATERIAL	HARDNESS	STANDARD	REMARKS

GEN. TOL. NOT SPECIFIED	
LINEAR DIMENSIONS	
0-6	±0.1
6-30	±0.2
30-120	±0.3
120-315	±0.5
315-1000	±0.8
1000-2000	±1.2
ANGULAR DIMENSIONS	
0-10°	±1°
10-50°	±30'
50-100°	±20'
>100°	±10'

~ UNMACHINED
▽ ROUGH
▽▽ SMOOTH
▽▽▽ FINISH

INDEX	AMENDMENTS	SIGN	DATE

FOR Sr. GM G.C.Fy.

2020	NAME	DATE
DRN.	MPS	10-10
CKD.		
APPROVED		

GABLE

(PRE—MACHINNING DRWG.)

(FOR TRADE ACTION ONLY)

MATERIAL
"IS:10343-1999, Gde 8Q, Cond 'QT' With %S & %P each 0.035 Max. to achieve Rp0.2 = 600 Mpa min., Rm = 800-950 MPa, El = 10%, HB = 235-285"

SCALE —— | REF.DRG.NO.2025634

ASSY/SUB ASSY NO. 1144022

DRG. No. GCF/50/40878

GUN CARRIAGE FACTORY, JABALPUR

DIMENSIONAL CHANGES ARE DONE AS PER PRODUCTION SECTION CONCERNED

SURFACE ROUGHNESS µm 25