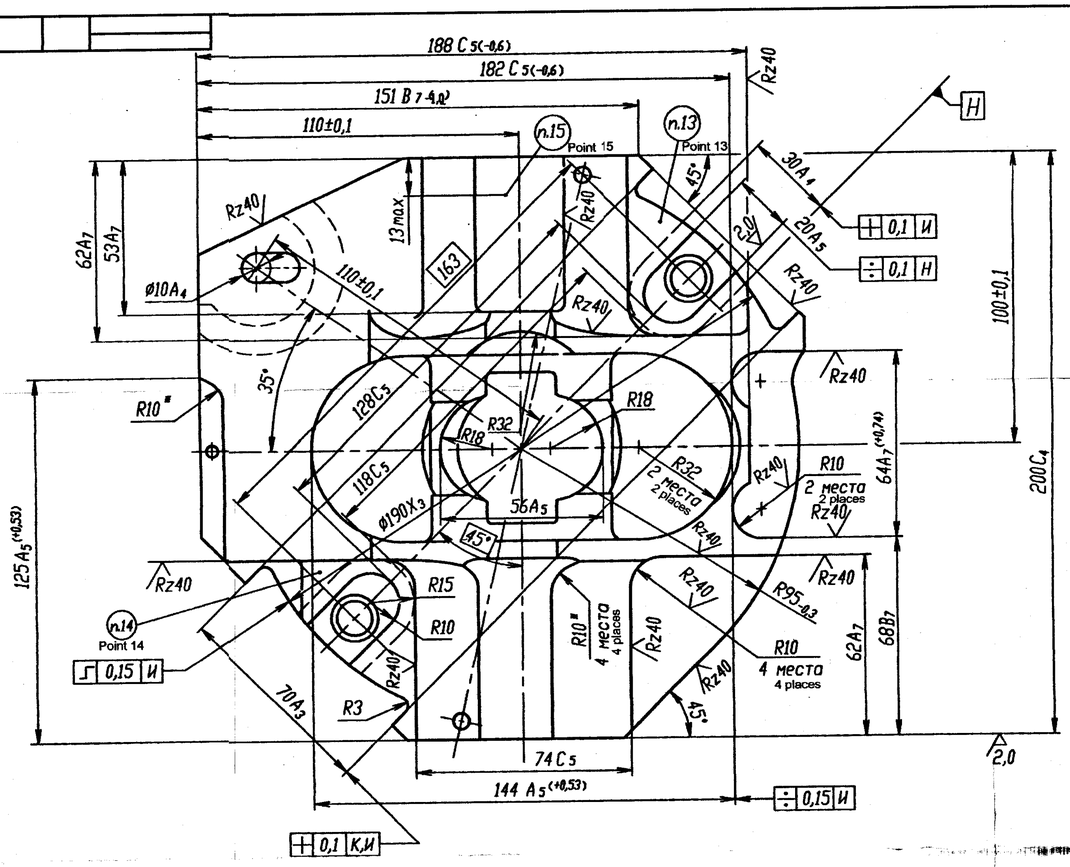

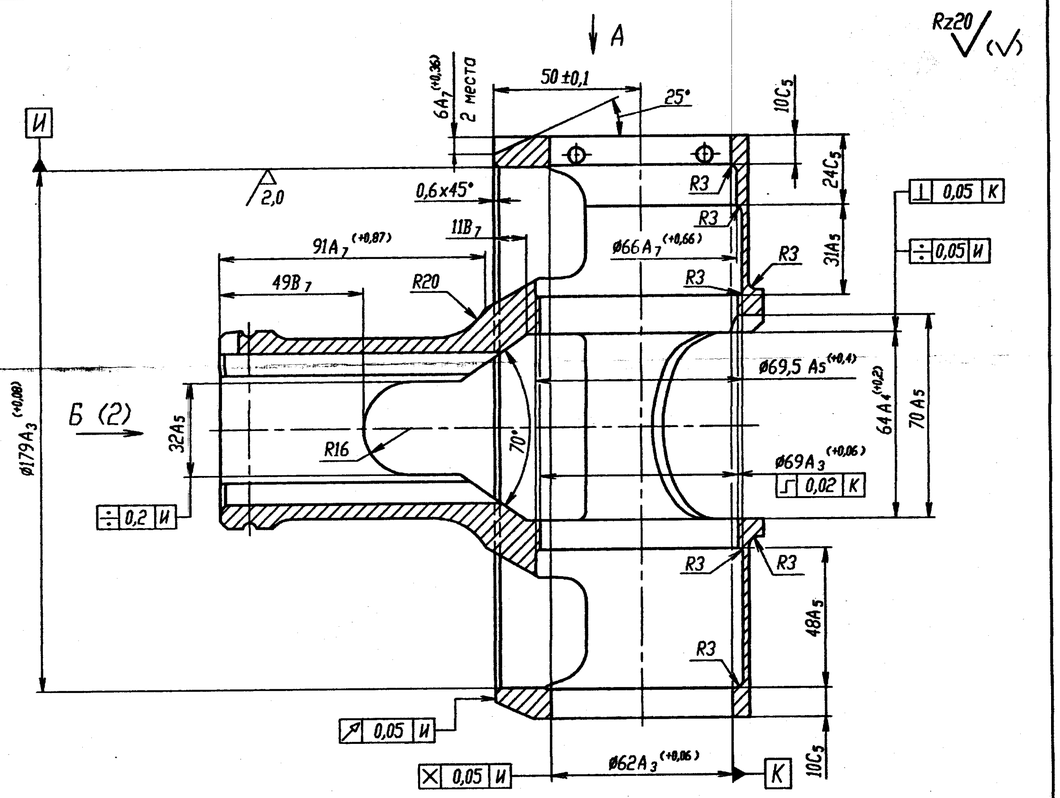

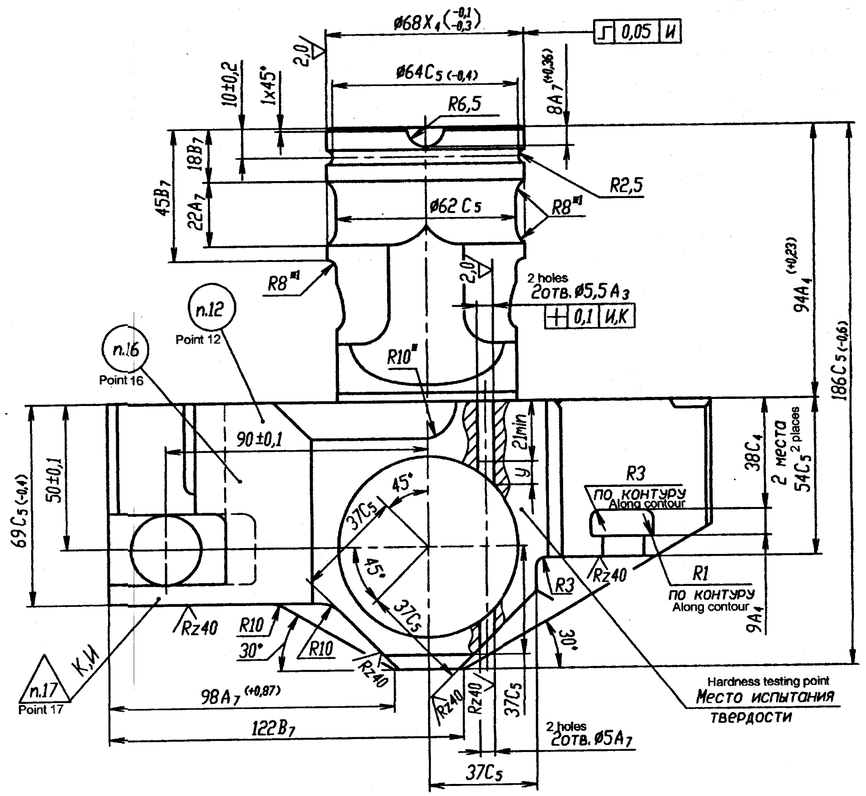

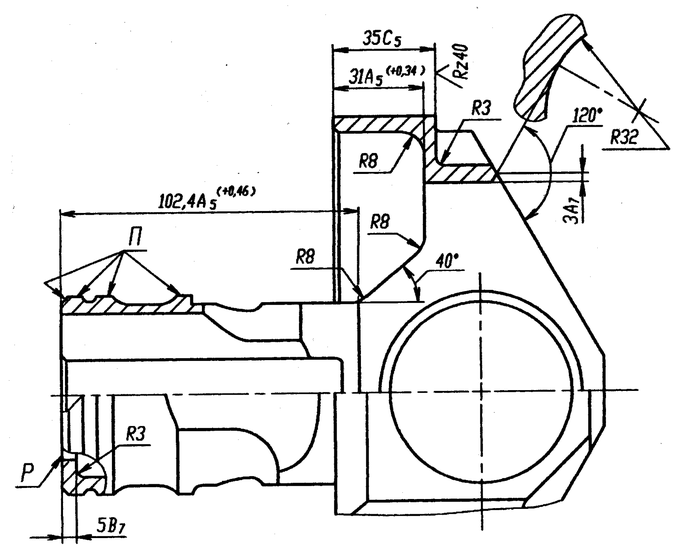

Blank - forging
2. 43.5...51.5 HRCe.
3.* Dimensions not in projection .
4. *' Dimensions are ensured by tool .
5. Internal angles R ≈ 0.4 mm .
6. Blunt edges R ≈ 0.6 mm
7. Coating : Chem. Phos. Acc cr/ adhesive БФ-4 GOST 12172-74 with black dye grade A GOST 9307-78, 1 layer , except surface П and face P. Apply suspension ВНИИ НП-212 TU 38. 101594-80, 1 layer before handing over for acceptance test and 2 ,layers before preservation .
8. Surface finish as per test specimen .
9. Tolerance along contour C should not be more than 0.4 mm.
10. Decrease of dimensions Φ 5.5 A_5 to 5 A_5 on section Y is permissible .
11. Engrave the inscriptions and pointers with letter size PO-5 GOST 2930-62, fill engrave with white enamel PF-115 GOST 6465-76.
12. Mark with letter size PO-5 GOST 2930-62.
13. Mark the digit 1 with letter size PO-5 GOST 2930-62.
14. Mark the digit 2 with letter size PO-5 GOST 2930-62.
15. Mark TOP with letter size PO-5 GOST 2930-62.
16. Mark complete number of article with letter size PO-5 GOST 2930-62. Fill inscription with white enamel PF-115 white GOST 6465-76.
17. Stamp .

					9-A-621.06.019			
Amend	Sheet	Doc. No.	Sign	Date	Back plate	Type	Weight	Scale
Developed by						O_2	5.55	1:1
Checked by						Sheet	Sheets 1	
Technician								
Head of bureau					Steel 30KhNH2MFA OST 3-98-80			
Head of Q.C.D								
Approved by								

Format A1

First remarks | Refer No. | Sign & Date | Alternate Inv. No. | Duplicate Inv. No. | Sign & Date | Inv. No.

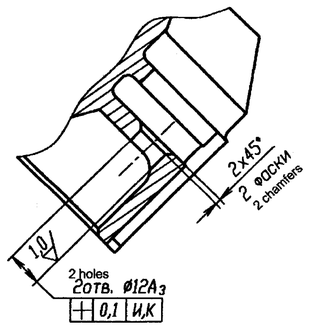

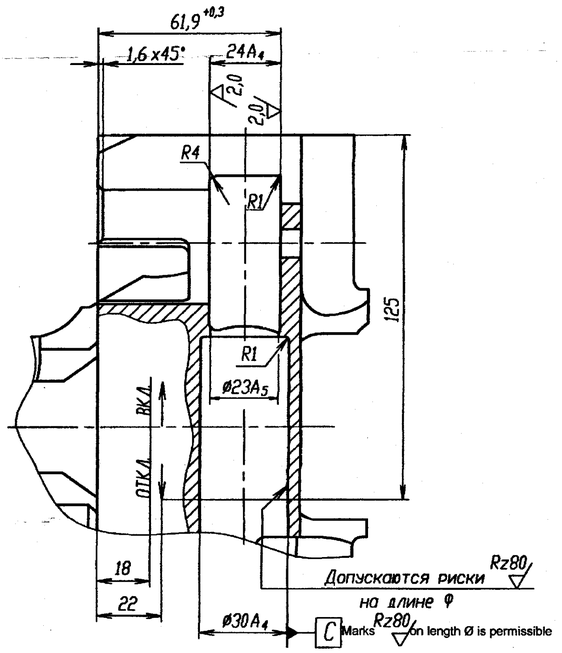

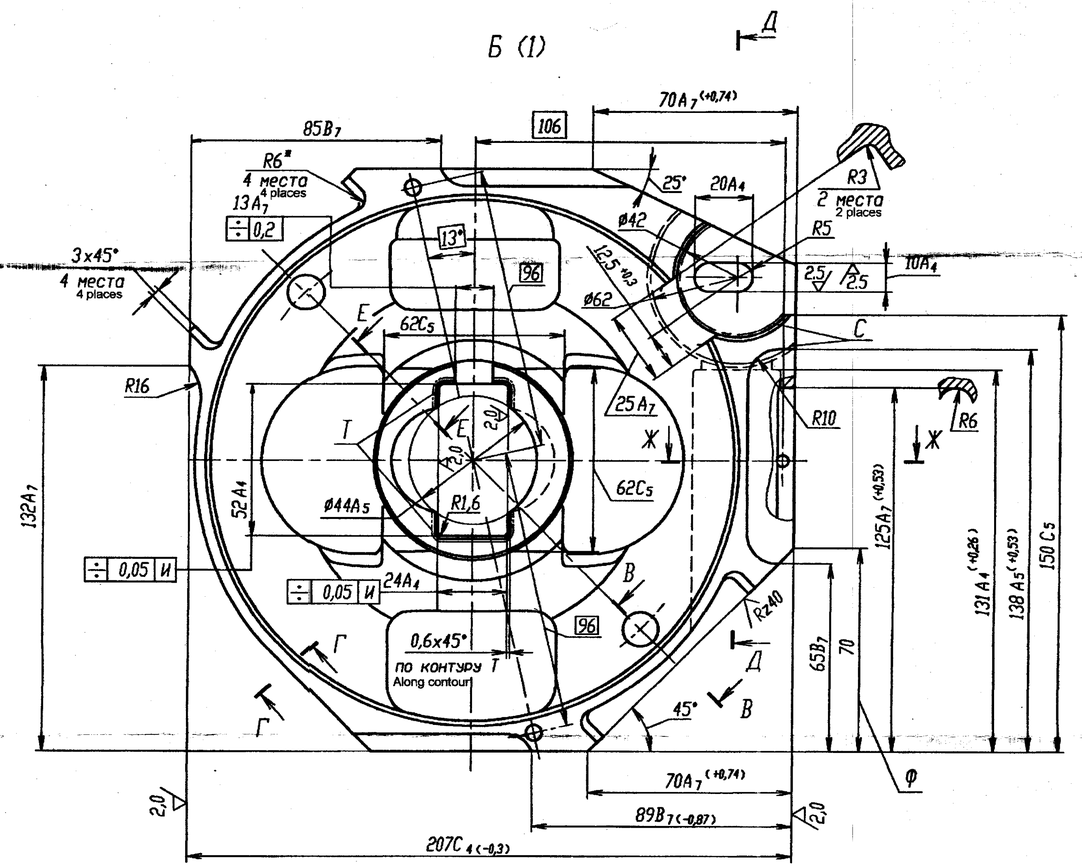

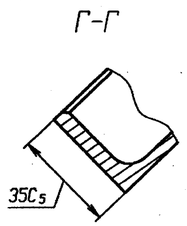

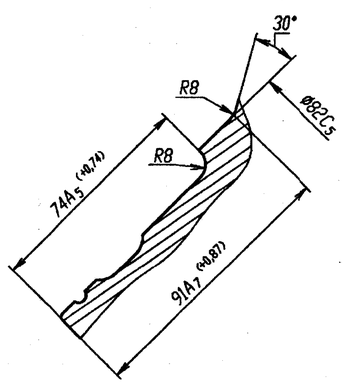

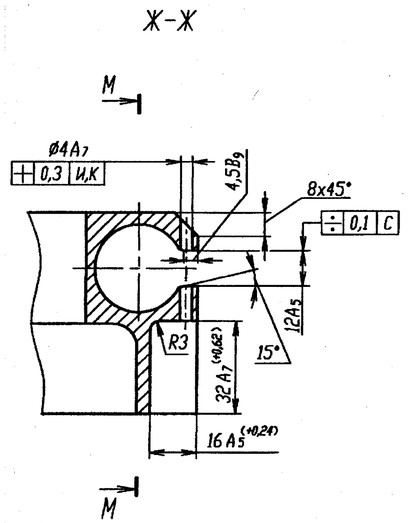

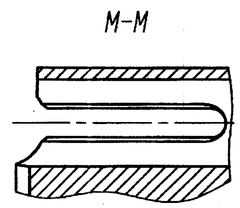

Amand	Sheet	Doc. No	Sign	Date	9-A-621.06.019	Sheet 2

Format A1

First remarks | Reference No. | Sign & Date | Duplicate Inv. No. | Alternate Inv. No. | Sign & Date | Inv. No.

PROVISIONAL

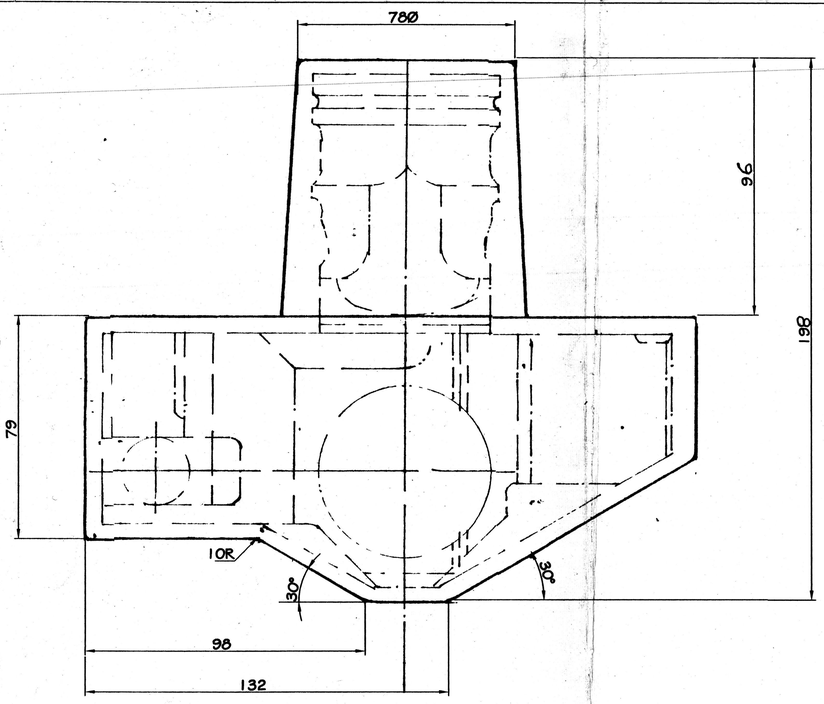

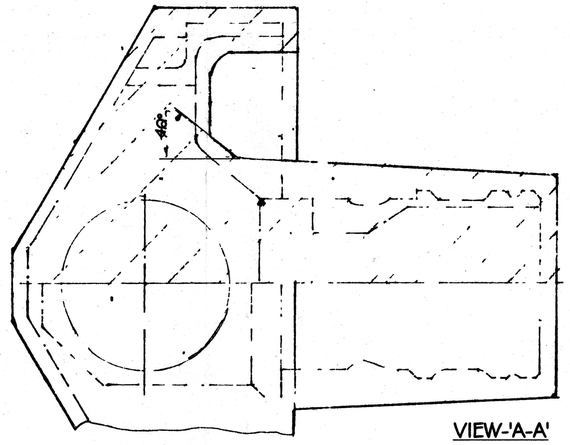

VIEW-'A-A'

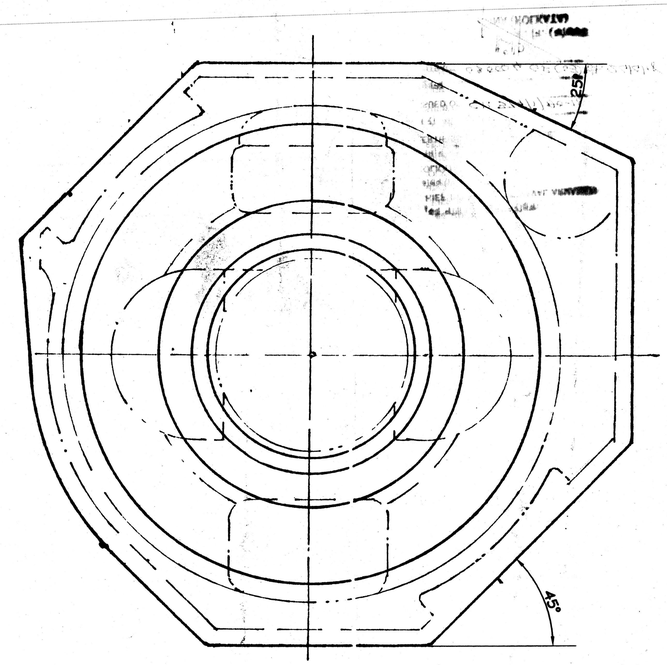

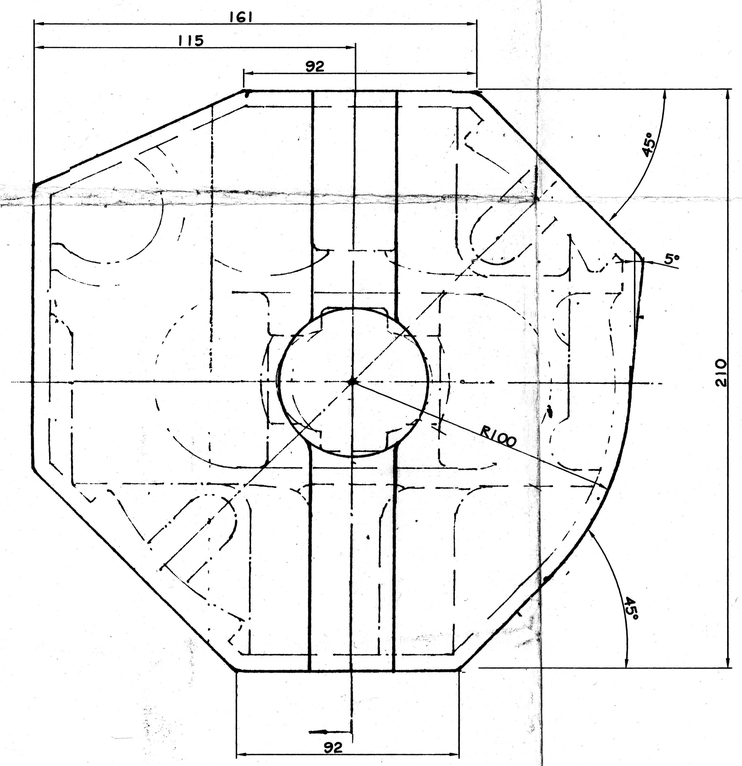

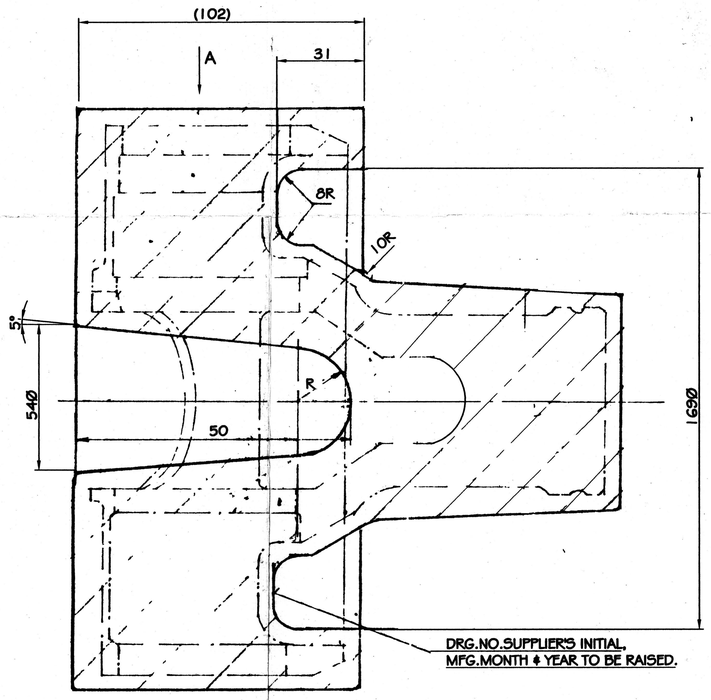

APPROVED BY:- CINA

MATERIAL:- STEEL 30XH2MØA (30KhN2MFA)
OST 3-98-80

NOTE:-

1) FORGING RIDGES TO BE TRIMMED CLEAN & SMOOTH FINISH ALL OVER.
2) FORGING TO BE SHOT BLASTED & SUPPLIED AFTER APPLYING RED OXIDE PRIMER TO JSS:3-47-13 BY BRUSHING OR SPRAYING.
3) SAMPLE TO BE APPROVED BEFORE BULK SUPPLY.
4) STEEL SHOULD BE FREE FROM CENTRE SEGREGATION,PIPING,FLAKES ETC
5) DRAFT ANGLES:-3°
6) UNSPECIFIED RADII:-3R
7) CHAIN DOTTED LINES INDICATES FINISH COMPONENT.

MICRO-STRUCTURE:-
GRAIN SIZE:- A.S.T.M5 OR FINER
INCLUSION RATING:- 3 ABCD THIN SERIES OR FINER AS PER IS:4163-1997. STEEL SHOULD NOT HAVE ANY LARGE INCLUSIONS OR A CONGLOMERATION OF INCLUSION.

ITEM NO.	NO. OFF	MATERIAL	DESCRIPTION
1	1	AS STATED	BACK PLATE FORGING

LIST OF PARTS

SCHEDULE NO :-		COMPT.:- BACK PLATE AK-630 M GUN	STORE DRG NO. SA-621-06-019
SCALE :-NTS	PROJECTION THIRD ANGLE		
DRAWN BY : 7/6/08		BACK PLATE FORGING	
TRACED BY :			
CHECKED BY :		DRG.NO. F-2270	
APPROVED BY :			
CONCURRED BY: WM/RED		M / C :	NO. OF SHTS.:-1
SIGN.	DATE :	G. & S. FY. COSSIPORE.	SHT. NO. :-1

DT. & SG.	DESCRIPTION
AMENDMENTS	