DRG. CONVENTIONS CONFORM TO IS:696
DIM. ARE IN mm.

PART No 1QX 798

D.C.I. 33461-A

DIMENSIONS MARKED * TO BE ACCURATELY WORKED TO.

NOTE :-

TOLERANCE ON UNTOLERANCED DIMENSIONS
FOR ONE DECIMAL PLACE ± 1·3
FOR TWO OR MORE DECIMAL PLACE ± ·13

TOLERANCE ON UNTOLERANCED ANGLES
FOR DEGREES ± 30'
FOR DEGREES AND MINUTES ± 5'

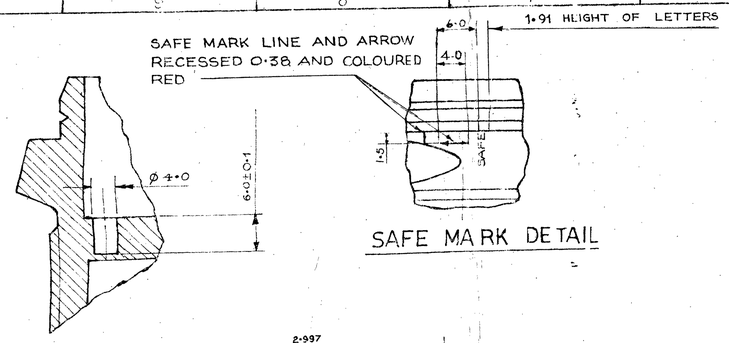

SAFE MARK DETAIL

PART SECTION 'XX'

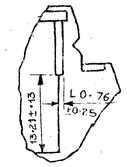

PART SECTION DD'

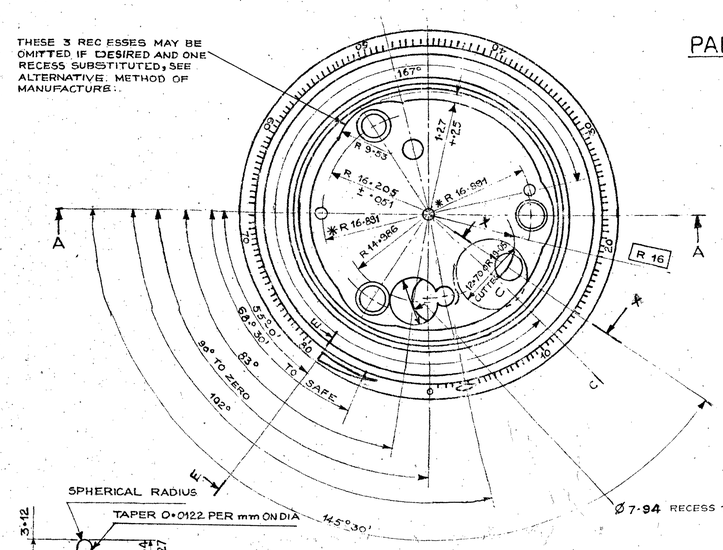

PLAN

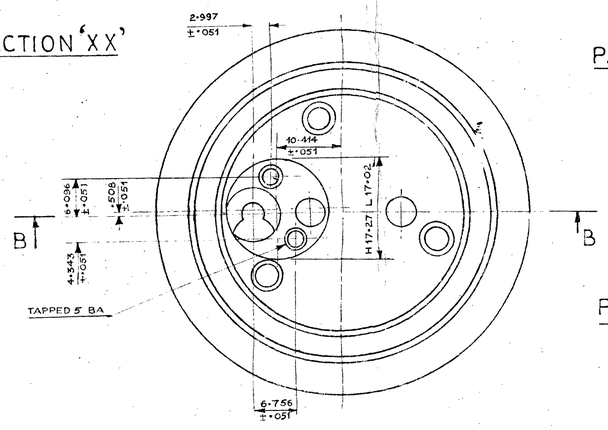

INVERTED PLAN

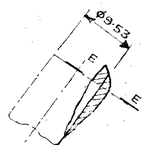

PART SECTION 'EE'

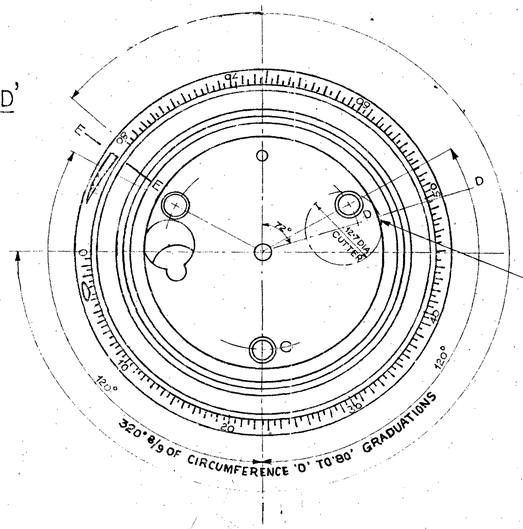

PLAN SHOWING ALTERNATIVE METHOD OF MANUFACTURE

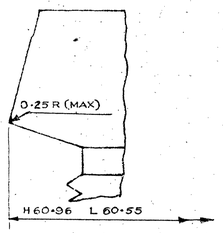

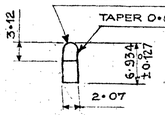

DETAIL OF DOWEL PIN

2 DOWEL PINS, BS 970 PT. 1:1983 Gr. 220 M07 COLD DRAWN TO BE A DRIVING FIT AND TO BOTTOM IN HOLES. HOLES TO BE C'SK·51 DEEP.

PART SECTION 'E.E'

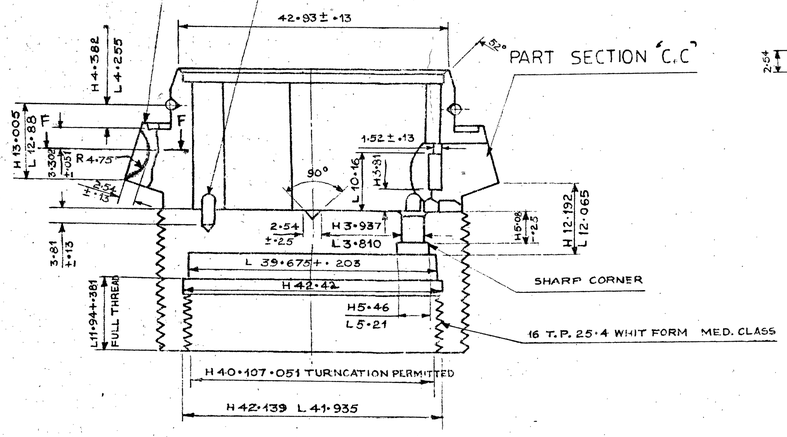

SECTION 'AA'

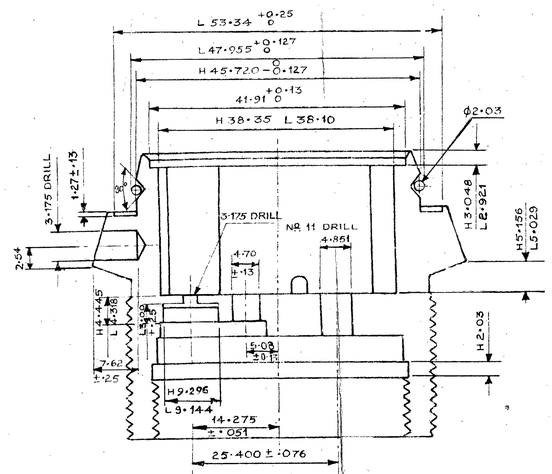

SECTION 'BB'

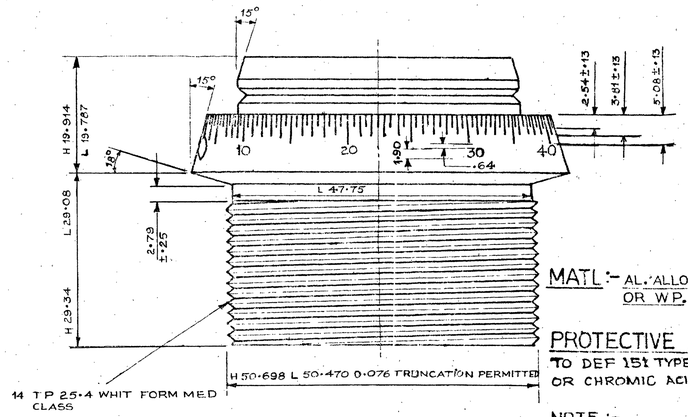

ELEVATION

MATL :- AL. ALLOY TO SPEC. IS 733, 24345 W OR W.P.

PROTECTIVE FINISH :- TO BE ANODISED TO DEF 151 TYPE 1 OR 2 (SULPHURIC ACID OR CHROMIC ACID PROCESS)

NOTE :-
DIMNS APPLY AFTER ANODISING

R NO.	DATE	AUTHORITY	BRIEF RECORD	ZONE	AHSP	D. O. SIGN
	1-1-05		SCANNED WITHOUT CHANGE			
5	9-9-88	DC 34450-A	ALT. PROTECTIVE FINISH ADDED.			
4	29-6-88	DC 34416-A	IN SECTION 'A-A' DOWEL PINS MATL. SPECN. AMENDED			
3	27-6-87	DCI. 34168-A	DS CAT No ADDED.			
2	20-7-83	D.C.I. 33461-A	DRG. SEALED PROV.			
1	26-4-83		TRACED WITHOUT CHANGE			

DRG. SEALED : 20-7-83 (PROV.) APPROVED FOR C.I.(A)

DRN – CHD – CD PASSED APPROVED FOR DIRECTOR

MATL :- AS ABOVE
PROTECTIVE FINISH :- AS ABOVE

DS CAT No 1390-000508

TRD – COMP – ASSY. DRG. 1QX 67 GE
SCALE – 2:1
EST. WEIGHT –
GAUGE SCHD –
DATE – 4-3-83

DESIGN AUTHORITY
ARDE PUNE 21

DESIGNERS REF
ARDE 1967

DET-13 SHT – -SHTS

PART NO. 1QX 798

AHSP – C.I.(A) KIRKEE.

BODY