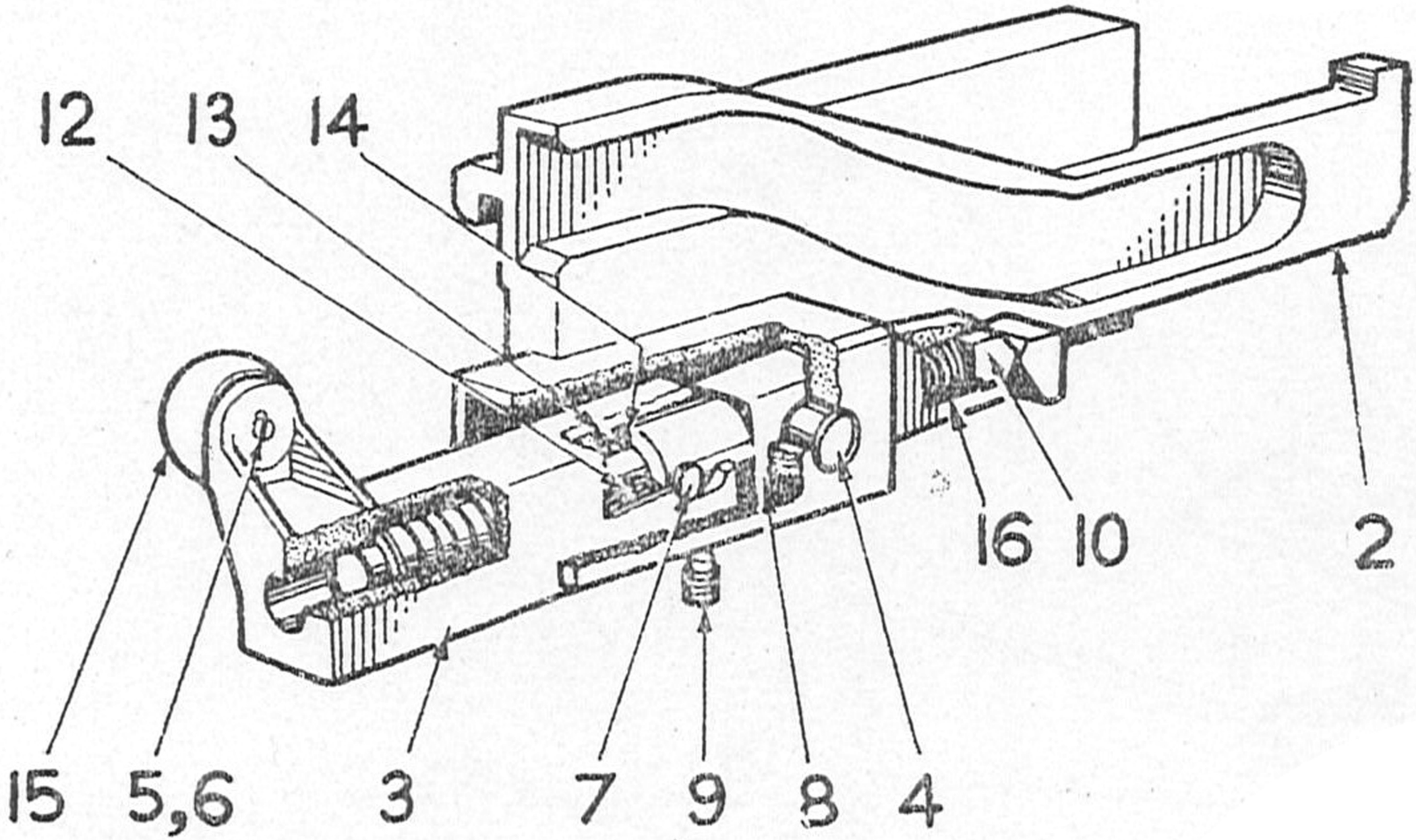

HEAD AUTOMATIC COCKING RAMMER ASSY.