ECKД

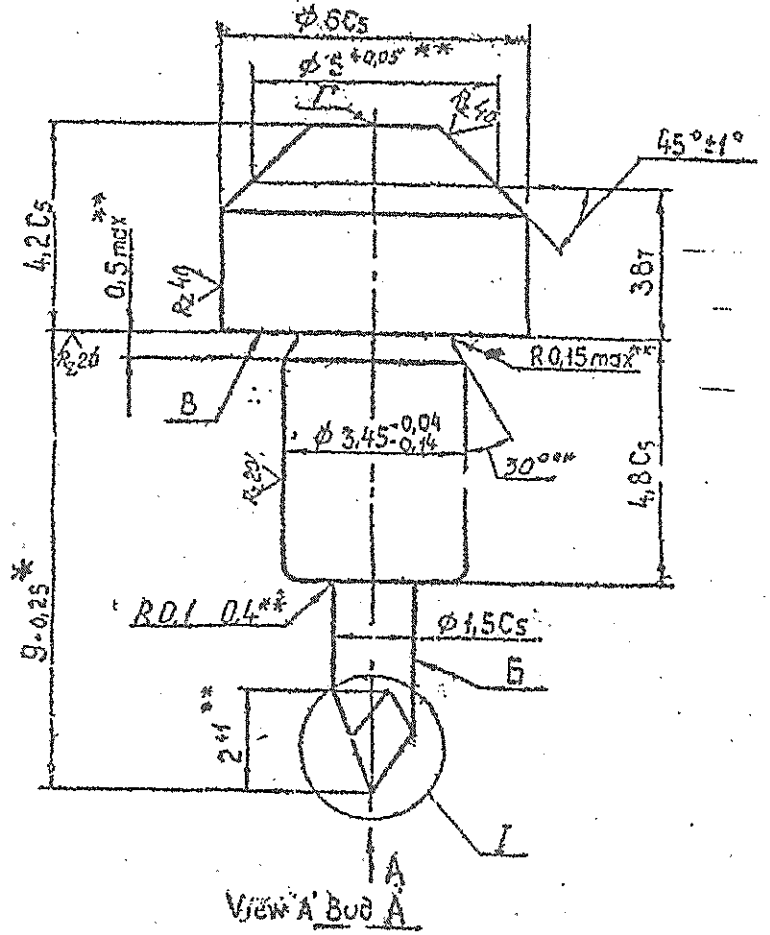

Section I Version I Вариант

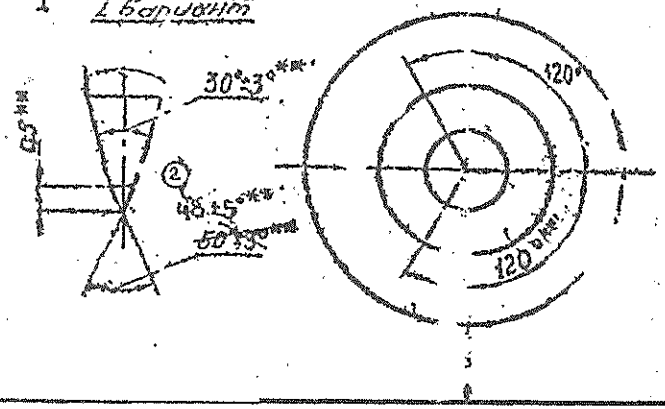

1. Alternative material – round bar Д16Т GOST 21488-76.
2. *Dimension subjected to total checking.
3. **Dimensions ensured by tool.
4. The followings are not allowed :
   a) Clamping the surface Б while manufacturing the faces of firing pin;
   b) Presence of tint on the faces of firing pin;
5. Machine the surfaces of revolution once clamped only.
6. Chemically passivated coating. (Yellow)
7. The followings are allowed :
   a) Presence of burrs on the faces of firing pin against the standart sample;
   b) The blunting of firing pin-point upto 0.2 MM;
   c) Dents on surface 'B' with a depth upto 0.02 MM as against standard sample.
   Pit with a diameter upto 1 MM and with a depth of upto 0.03MM on surface 'Г'.
   d) Coating with varnish ВЛ-7-4(1) OST B 84-811-73;
   e) Coating : Chemically passivated (varnish ВЛ-7-4(1); varnish ВЛ-7-4(1) OST B 84-811-73.

The standard samples are established by manufacture and agreed with customer representative at manufacturing plant.
Other requirements are as per OST B 84-204-81.
INDIGENOUS MATL :-
GOST 1583 REAFFIRMED 2006 Gd 24345 IN WP CONDITION WITH MECH PROPERTIES Rm-40Kgf/mm² (MIN) Rp 0.2-28 Kgf/mm² (min) A5-10% MIN

05-01-2011	DGOA S O Sec I Chap 10 para 40		...scan,clean & edit without change & m/c ...placed in supersession of existing ...lapidated copy of same No.		
08-11-10	D C.37271-A	IN	GENOUS MATL ADDED AS NOTE No 3		
24-9-87	DCI.34241-A	DR	PROV. SEALED		
DATE	AUTHORITY		REVISION	SIG AHSP.	SIG D O.

APPROVED
FOR CO
AHSP :- CQA(A) KIRKI

SNCSM	DOC NO	SIGN
DRAWN		
EDT/CHKD		
F/M, DC		
DIV.CFFR		
	NAME	SIGN

3-01058875 | A3-BP-0321

GW 7-012-029

Firing Pin

SHEET No. | SCALE | SHEET

Wire Д16ПТ
GOST 1-92005-83

ORDANC FACTORY PRO T HYDF