ASSY. OF ITEM NO. (1) STEPNEY BRACKET &
ITEM NO.(2) INTERMEDIATE BRACKET

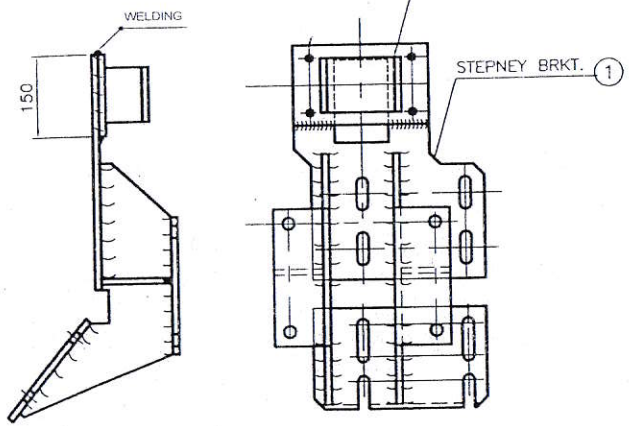

① STEPNEY BRACKET

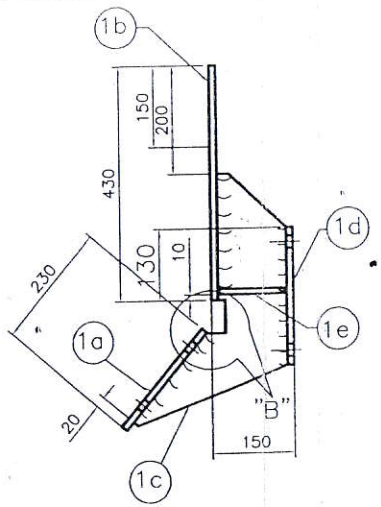

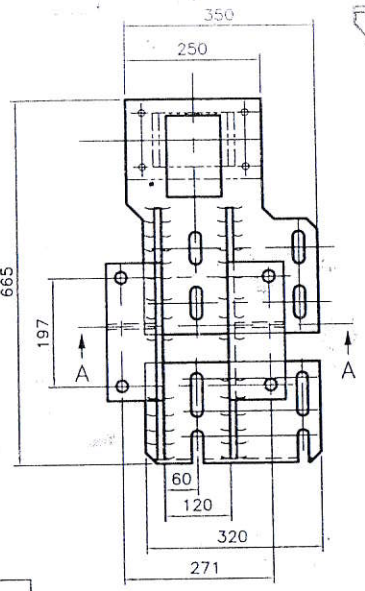

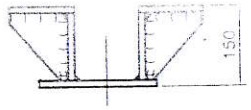

VIEW : A–A

ENLARGE VIEW "B"

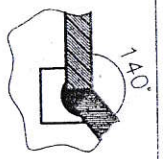

② INTERMEDIATE BRACKET
(ASSEMBLED BRACKET)

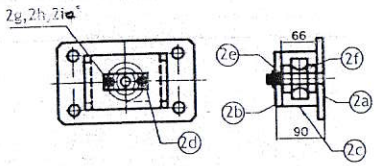

FABRICATED BRACKET

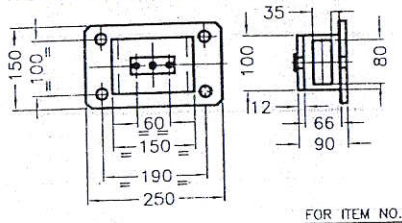

2e

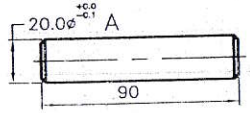

QTY./ASSY=01 NO.

2f

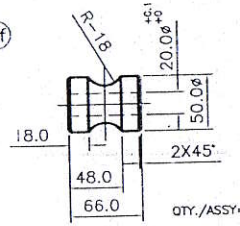

QTY./ASSY=01 NO.

FOR ITEM NO. 2a,2b,2c & 2d DETAILS, REFER SHEET NO. 3/4.

SL NO	DESCRIPTION	QTY/ ASSY	MATERIAL
2i	SPRING WASHER B8	02	IS: 6735
2h	HEX. NUT M8	02	IS: 1363
2g	HEX.BOLT M8X15	02	IS: 1363
2f	PULLEY	01	GR-4,40C8 IS:9550
2e	SHAFT	01	GR-4,40C8 IS:9550
2d	PLATE	01	ST34-IS:1079
2c	PLATE	02	ST34-IS:1079
2b	PLATE	01	ST34-IS:1079
2a	PLATE	01	ST34-IS:1079

③ LIFTING BRACKET

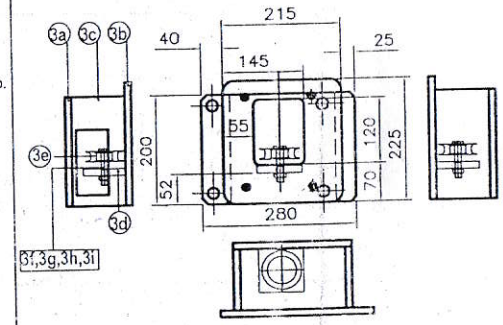

FOR ITEM NO. 3a,3b,3c & 3d DETAILS, REFER SHEET NO. 4/4.

SL NO	DESCRIPTION	QTY/ ASSY	MATERIAL
3i	SPLIT PIN 4X25	01	IS: 549
3h	SPRING WASHER B12	01	IS: 6735
3g	HEX. NUT M12	01	IS: 1363
3f	HEX. BOLT M12X60	01	IS: 1363
3e	B0993604 S/A PULLEY ASSY. (X1501515)	01	A/L ITEM
3d	PLATE	01	ST34-IS:1079
3c	PLATE	02	ST34-IS:1079
3b	PLATE	01	ST34-IS:1079
3a	PLATE	01	ST34-IS:1079

FOR ITEM NO. 1a,1b,1c ,1d & 1e DETAILS, REFER SHEET NO. 2/4.

ITEM	DESCRIPTION	NO.OFF	MATL	TREAT/SIZE	REMARKS
1e	STIFFENER	2	St-34	90x125x12 THK.	
1d	FRONT PLATE	2	St-34	103x250x12 THK.	
1c	RIB	2	St-34	295x465x12 THK.	
1b	VERTICAL PLATE	1	St-34	350x430x12 THK	
1a	INCLINED PLATE	1	St-34	230x320x12 THK.	

NOTE:
1. ALL DIMENSIONS ARE IN MM.
2. UNSPECIFIED LIMIT DEVIATIONS ARE ±1mm.
3. RED-OXIDE TO BE COATED AFTER WELDING.
4. FOR DETAILS (LASER CUT) REFER SHEET NO. 2/4,3/4 & 4/4
5. PILOT SAMPLE TO BE APPROVED BEFORE BULK SUPPLY.

QTY./VEH=01 NO.

ITEM	DESCRIPTION	NO.OFF	MATL	TREAT/SIZE	REMARKS
3	LIFTING BRACKET	1			
2	INTERMEDIATE BRACKET	1			
1	STEPNEY BRACKET	1			

INDEX	ALTERATION	SIGN	DATE	ALTERNATE NOTE	MODEL APPLICABLE

UPGRADED MPV 4X4

DIR/ODC
AD/ODC
JWM/ODC
DRN
CKD

DIMS	TOL
0 - 30	±0.1
30-250	±0.2
250-800	±0.3
800-2000	±0.5
>2000	±0.8
GEN.TOL.	

MOD. STEPNEY MOUNTING ARRANGEMENT ON RH SIDE FOR UPGRADED MPV 4x4

REF.DRG. NO
REPLACED BY
REPLACEMENT FOR

SCALE 1:1
DATE 04-11-15

ODC

VEHICLE FACTORY JABALPUR

DRG NO. 2700-57-32

1/4 SHT.

LASER CUT ITEMS FOR ITEM NO. 01 STEPNEY BRACKET

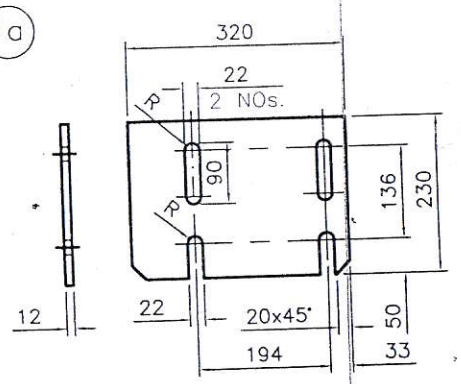

QTY/ASSY: 1

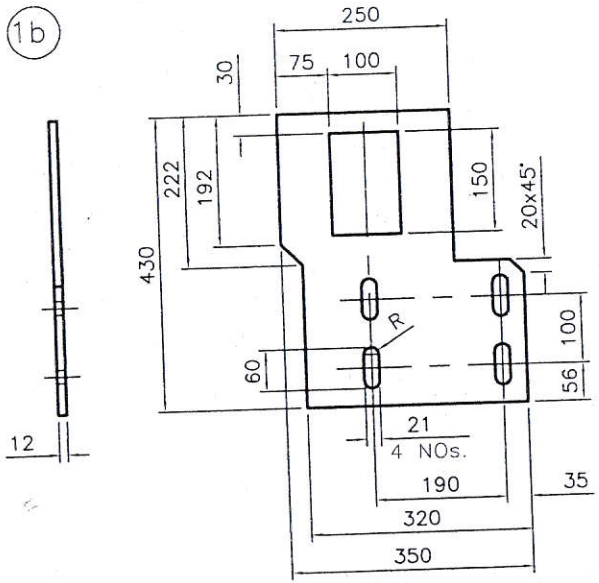

QTY/ASSY: 1

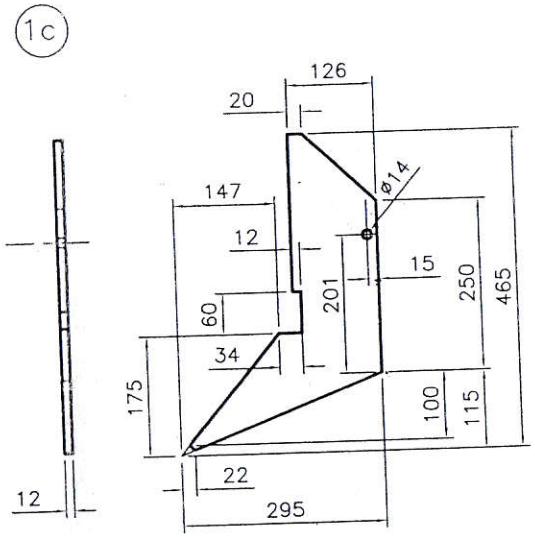

QTY/ASSY: 2

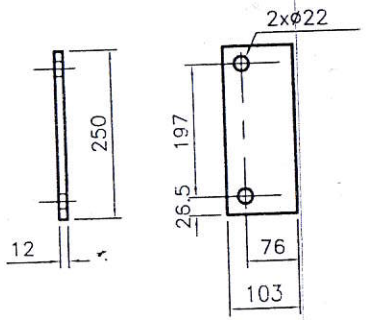

QTY/ASSY: 2

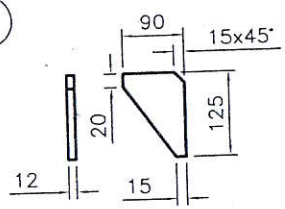

QTY/ASSY: 2

NOTE:

1. ALL DIMENSION ARE IN MM.
2. UNSPECIFIED LIMIT DEVIATIONS ARE ±1MM.
3. MATERIAL:- St 34-IS:1079
   FOR ALL PLATES,12 mm THICK.

ITEM	DESCRIPTION	NO.OFF	MATL	TREAT/SIZE	REMARKS
				UPGRADED MPV 4X4	DIR/ODC
					AD/ODC
					JWM/ODC
				ALTERNATE NOTE / MODEL APPLICABLE	DRN / CKD

INDEX	ALTERATION	SIGN	DATE

DIMS.	TOL.
0 - 30	±0.1
30-250	±0.2
250-800	±0.3
800-2000	±0.5
>2000	±0.8
GEN.TOL.	

MOD. STEPNEY MOUNTING ARRANGEMENT ON RH SIDE (LASER CUT ITEMS) FOR UPGRADED MPV 4x4

REF.DRG. NO.

REPLACED BY

REPLACEMENT FOR

SCALE 1:1

DATE 04-11-19

ODC

VEHICLE FACTORY JABALPUR

DRG.NO. 2700-57-32

SHT. 2/4

LASER CUT ITEMS FOR ITEM NO. 02 INTERMEDIATE BRACKET

2a

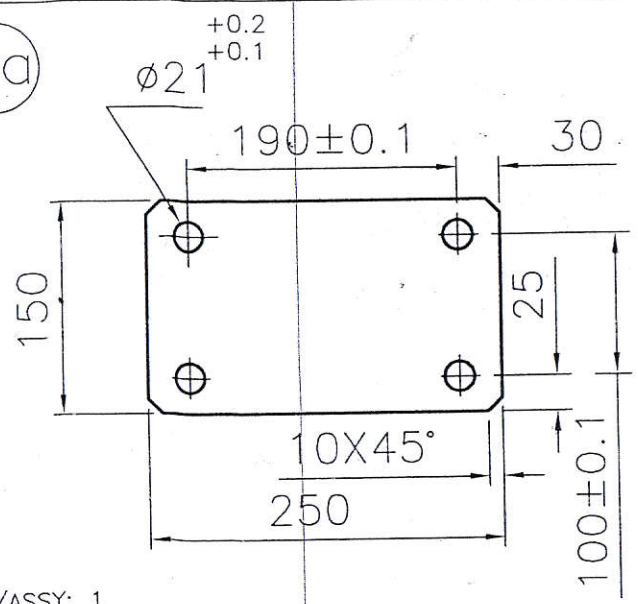

QTY/ASSY: 1

2b

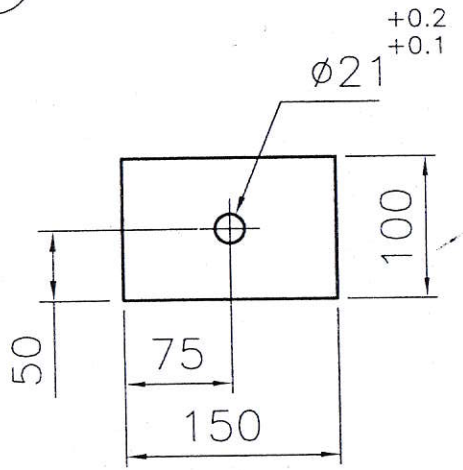

QTY/ASSY: 1

2c

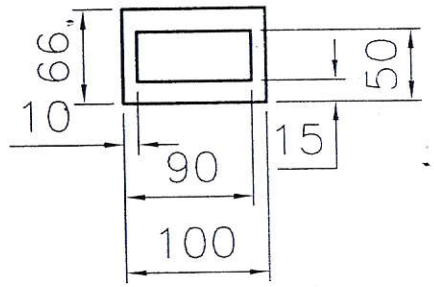

QTY/ASSY: 2

2d

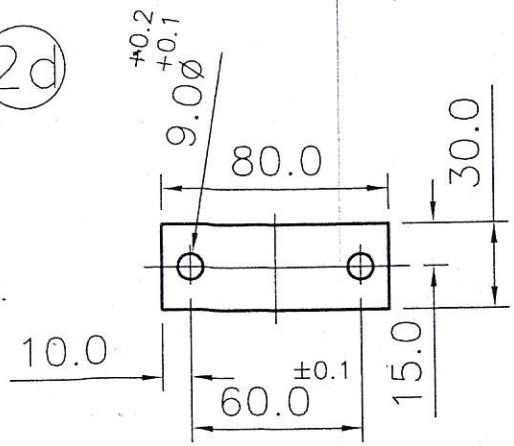

QTY/ASSY: 1

1. ALL DIMENSIONS ARE IN MM.
2. UNSPECIFIED LIMIT DEVIATIONS ARE ±1MM
3. MATERIAL: St 34-IS:1079
   FOR ITEM NO. 04, 5mm THICK
   FOR ALL REMAINING PLATES-12mm THICK

ITEM	DESCRIPTION	NO.OFF	MATL	TREAT/SIZE	REMARKS
				UPGRADED MPV 4X4	DIR/ODC
					AD/ODC
					JWM/ODC
INDEX	ALTERATION	SIGN	DATE	ALTERNATE NOTE / MODEL APPLICABLE	DRN / CKD

DIMS.	TOL.
0 - 30	±0.1
30-250	±0.2
250-800	±0.3
800-2000	±0.5
>2000	±0.8
GEN.TOL.	

MOD. STEPNEY MOUNTING ARRANGEMENT ON RH SIDE (LASER CUT ITEMS) FOR UPGRADED MPV 4x4

REF DRG. NO.

REPLACED BY

REPLACEMENT FOR

SCALE 1:1

DATE 04-11-09

ODC

VEHICLE FACTORY JABALPUR

DRG.NO. 2700-57-32

3/4 SHT

LASER CUT ITEMS FOR ITEM NO. 03 LIFTING BRACKET

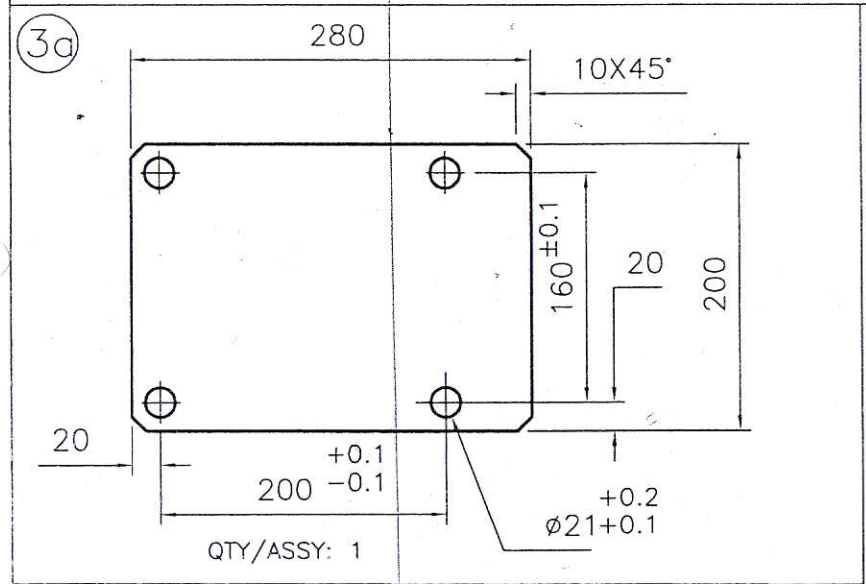

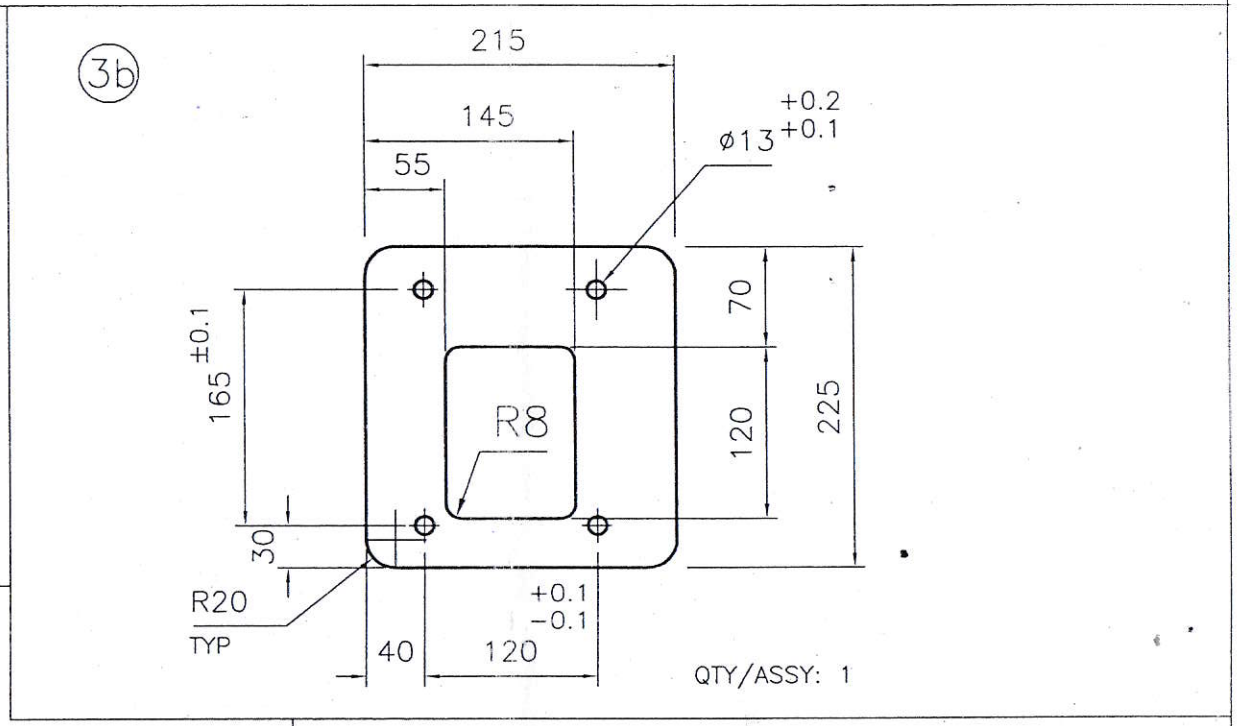

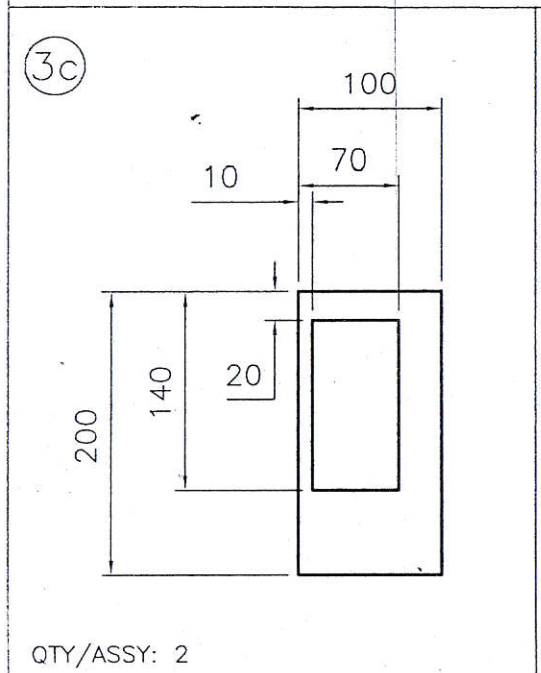

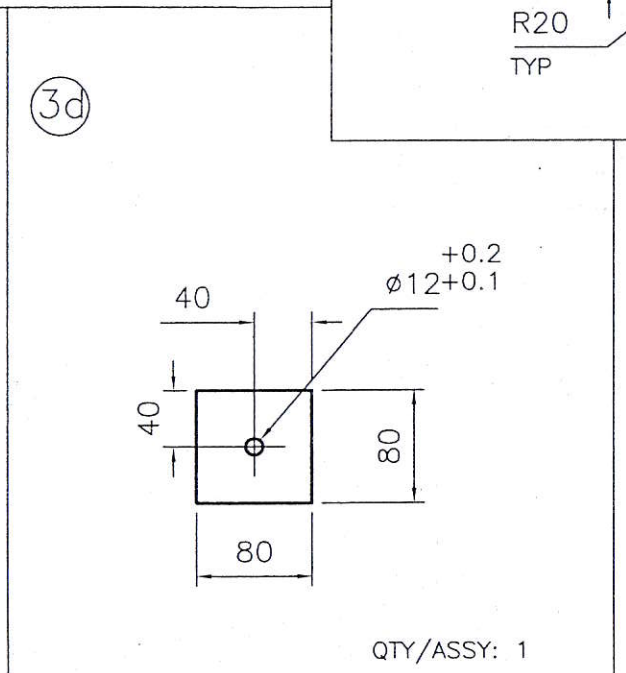

1. ALL DIMENSIONS ARE IN MM.
2. UNSPECIFIED LIMIT DEVIATIONS ARE ±1MM
3. MATERIAL: St 34-IS:1079
   FOR ALL PLATES-12mm THICK

ITEM	DESCRIPTION	NO.OFF	MATL	TREAT/SIZE	REMARKS
				UPGRADED MPV 4X4	DIR/ODC
					AD/ODC
					JWM/ODC
INDEX	ALTERATION	SIGN	DATE	ALTERNATE NOTE / MODEL APPLICABLE	DRN / CKD

DIMS.	TOL.
0 - 30	±0.1
30-250	±0.2
250-800	±0.3
800-2000	±0.5
>2000	±0.8
GEN.TOL.	

MOD. STEPNEY MOUNTING ARRANGEMENT ON RH SIDE (LASER CUT ITEMS) FOR UPGRADED MPV 4x4

REF.DRG. NO.

REPLACED BY

REPLACEMENT FOR

SCALE 1:1

DATE 04-11-19

ODC

VEHICLE FACTORY JABALPUR

DRG.NO. 2700-57-32

4/4 SHT