ALTERNATE : Rubber Gde FKM to Specn. CQA(HV) FKM

DRAWING NUMBER
432.40.036-2

SHEET No. 1 OF 1

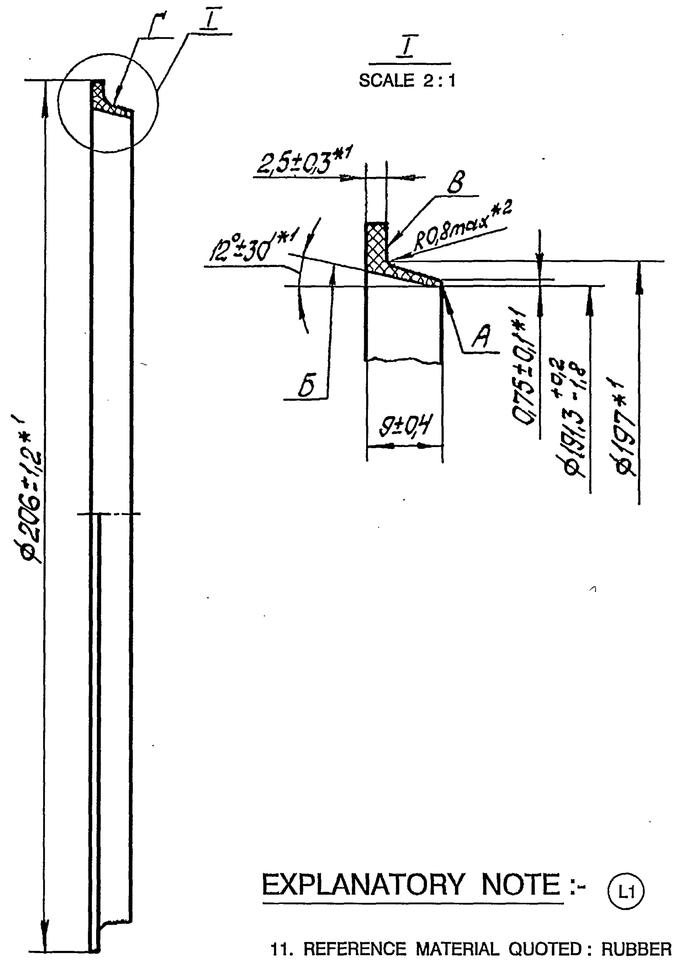

1. DIMENSIONS MARKED WITH *1 ARE TO BE ENSURED BY TOOL.
2. DIMENSIONS MARKED WITH *2 ARE GIVEN FOR REFERENCE.
3. "Б" IS MARKING SURFACE.
4. WORKING EDGE "A" AND SURFACE "Б" MAY HAVE MARKS CAUSED BY GRINDING OFF THE FLASH UPTO 0.2 MM IN DEPTH AND 0.2 MM IN HEIGHT AND LOCAL INCONSIDERABLE BLUNTS OF UPTO R 0.1 MM.
5. NON-WORKING SURFACES MAY HAVE PROJECTIONS, DEPRESSIONS UPTO 0.5 MM (THOSE ON SURFACE "Г" UPTO 0.2 MM), BESIDES, THEY MAY HAVE INCLUSIONS AND HOLLOWS LEFT BY FALLEN-OUT INCLUSIONS 0.3 MM HIGH AND DEEP (NOT MORE THAN THREE SUCH DEFECTS ON 100 MM ARC ARE PERMISSIBLE), IMPRINTS FROM MOULD OF NOT MORE THAN 0.5 MM. ALL THESE DEFECTS SHOULD BE GROUND.
6. PERMISSIBLE ARE THE FOLLOWING DEFECTS.
   a) ON COMPONENT SURFACE - MOIRE PATTERN, DULL SPOTS, MINOR BURNINGS, EMBEDMENT OF FOREIGN MATTER, MARKS WITHOUT EXFOLIATION CAUSED BY SEPERATION OF BLANK FROM MOULD.
   b) ON NON-WORKING SURFACES - FLASH 0.3 MM MAX. FROM MOULD ALONG ITS SPLIT SURFACES AND TRACES LEFT BY MACHINING OF FLASH OF NOT MORE THAN 0.3 MM.
   c) SPONTANEOUS DISTORTION OF COMPONENT FORM.
7. ON SURFACE "B" THE COMPONENT NUMBER SHOULD BE MARKED BY IMPRINTING THE ENGRAVING OF THE MOULD. FOR THE PURPOSE, USE TYPE ПО-2 OF GOST 2930-62.
8. SEALS SHOULD BE TRANSPORTED ON CARDBOARD CARTON OR PRESS BOARD MANDREL. AT THIS IT IS IMPERMISSIBLE THAT COMPONENTS BE DAMAGED BY CONTAINERS.
9. (5) (6) DIAMETRICAL DIMENSIONS ARE TO BE CHECKED IN COMPLIANCE WITH INSTRUCTIONS UC-51-10-35-75. 81.
10. OTHER REQUIREMENTS FOR ARTICLES, CODE 253122, AS PER TY 005 216-75.

EXPLANATORY NOTE :- (L1)

11. REFERENCE MATERIAL QUOTED : RUBBER STOCK ЦРП-1316 TY 005 216-75

PHYSICAL AND MECHANICAL PARAMETERS	
TYPE OF RAW RUBBER	CK Ø 26
RUPTURE STRENGTH	160 Kgf / cm² MIN.
ELONGATION OF RUPTURE	65 % MIN
RESIDUAL ELONGATION AFTER RUPTURE	5 % MAX.
HARDNESS IN CONVENTIONAL UNITS (TNP)	76 TO 88
DENSITY	1.95±0.05 g/cm³
WORKING TEMPERATURE	– 20°C TO +200°C
WORKING MEDIUM	OILS

(6A) 172.40.052cbCb
172.40.053cbCb
172.40.054cbCb

RUBBER STOCK ЦРЛ-1316
TY 005 216-75

(6C) ALT. MATL: RUBBER GRADE FKM TO SPECN. CQA(HV)/FKM

PILOT SAMPLE SHOULD BE APPROVED BY A H S P BEFORE BULK PRODUCTION.

EST. WT. (Kg)	TO BE STAMPED OR MARKED WHERE INDICATED THUS # (LETTERS)
0.03	

ALL SHARP EDGES AND CORNERS TO BE REMOVED UNLESS OTHERWISE STATED MACHINED CORNERS TO HAVE R OUT-SIDE R INSIDE EQUIVALENT CHAMFERS ARE PERMISSIBLE.

ISSUE	DATE	NATURE OF AMENDMENTS
6C	13.01.07	Lt.No.81312/CQA(HV)/DB-III/Alt.Matl. dt.12.10.06.
6B	18.2.05	AS PER KIT LIST No.CQA(HV)/SET/0021
6A	17.9.04	N OF A. No. CQA(HV)/T90/40/001
5,6	18.11.88	AMDT. LIST. 6/II, BOOK-7

DRN	Sd / =
CHD	Sd / =
APPD	Sd / =
DATE	18-09-86
SCALE:-	1 : 1
DIMENSIONS IN mm	
TOLERANCE ON DIMNS UNLESS OTHERWISE STATED IS : 2102-69	
ALL THREADS TO CONFORM TO IS : 4218 Pt. IV	

MATERIAL :- SEE ABOVE

USED ON :- 172.40.018cb
172.40.019cb
172.40.020cb

CONTROLLERATE OF QUALITY ASSURANCE (HEAVY VEHICLES) AVADI

TITLE :- COLLAR (6B)

D S CAT NUMBER

DRAWING NUMBER 432.40.036-2

" COMMON TO T-90 "
DRG.RE INDIANISED BASED ON RUSSIAN ORIGINAL ISSUE - NIL
(R.RAMANI),JTO 10-05-06

F-78

SIZE A2