DRAWING NUMBER
20-27-333

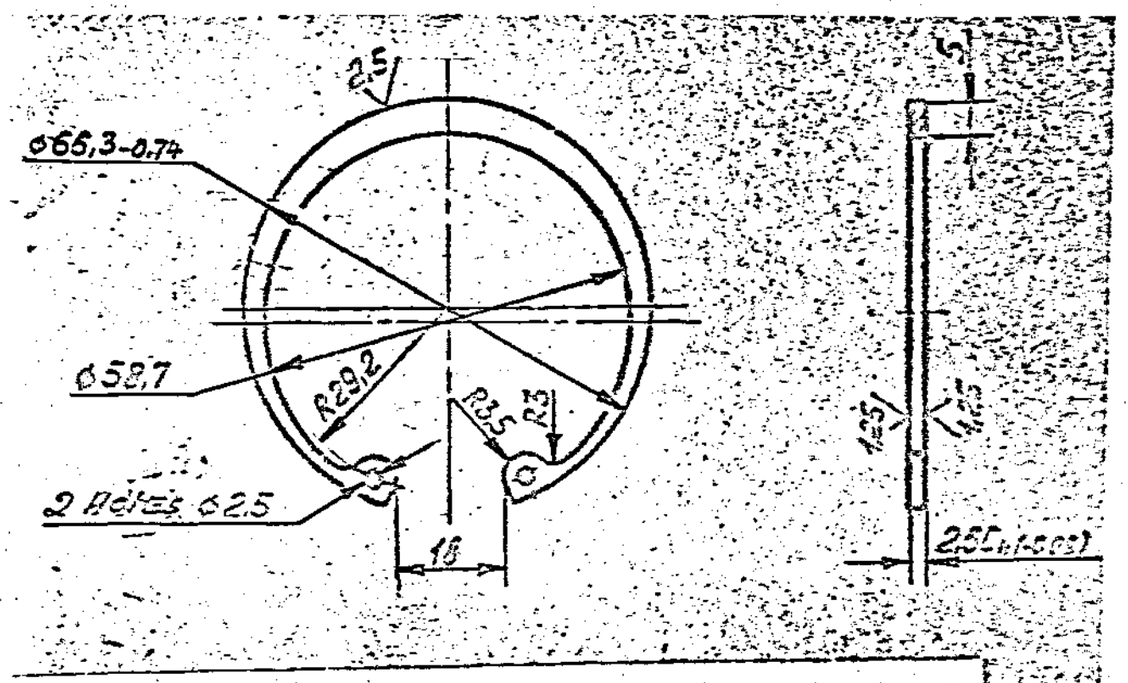

1. INSPECTION GROUP IV AS PER TECHNICAL REQUIREMENTS TT-1
2. TECHNICAL REQUIREMENTS ARE AS PER GOST 13944-68.
3. COATING : CHEMICALLY OXIDIZED, OILED.
4. APPLY STAMPING ONTO THE TAG FOR BATCH OF PARTS AND SEAL.

EXPLANATORY NOTE :-

MATERIAL 3 GOST 19904-74 / 65Г GOST 1542-71

COLD ROLLED SHEET GOST 19904-74

3 - THICKNESS OF SHEET STEEL

65Г - GRADE OF MATERIAL

(a) CHEMICAL COMPOSITION :- AS PER GOST 1050-74

GRADE OF STEEL	CONTENT OF ELEMENTS %							
	C	Si	Mn	Cr (max)	P (max)	S (max)	Cu (max)	Ni (max)
65Г	0,62 - 0,70	0,17 - 0,37	0,90 - 1,20	0,25	0,035	0,20	0,15	0,10

(b) MECHANICAL PROPERTIES :-

HARDNESS - H R C = 24

TENSILE STRENGTH = 60 - 85 Kg/mm²

ELONGATION % = 12 (MIN)

DECARBONISED DEPTH WILL BE CHECKED AS PER SPECIFICATION.

(A) EQUIVALENT MATERIAL
75 C6 TO IS:2507/EN 42 J BS:970

ISSUE	DATE	NATURE OF AMENDMENTS
A	16-08-10	4th. Alt. Comm. Meeting Minutes Point No.12 Dt:26-10-09

DRN
CHD
TCD
APPD
DATE 4 - 05 - 87
SCALE :- 1 : 1
DIMENSIONS IN mm
TOLERANCE ON DIMNS UNLESS OTHERWISE STATED IS:2102-69
ALL THREADS TO CONFORM TO

MATERIAL 3 GOST 19904-74 / 65Г GOST 1542-71

USED ON CB 20-27-05-X7

CONTROLLERATE OF QUALITY ASSURANCE(HEAVY VEHICLES) AVADI

PILOT SAMPLE SHOULD BE APPROVED BY A H S P BEFORE BULK PRODUCTION

EST. WT. 0.0112 Kg.

TO BE STAMPED OR MARKED WHERE INDICATED THUS ⌗ (LETTERS)

ALL SHARP EDGES AND CORNERS TO BE REMOVED UNLESS OTHERWISE STATED MACHINED CORNERS TO HAVE R OUT SIDE B INSIDE EQUIVALENT CHAMFERS ARE PERMISSIBLE.

TITLE
LOCKING RING

D S CAT NUMBER

DRAWING NUMBER
20-27-333

DRAWING NUMBER
550-101

Rz 80 (✓)

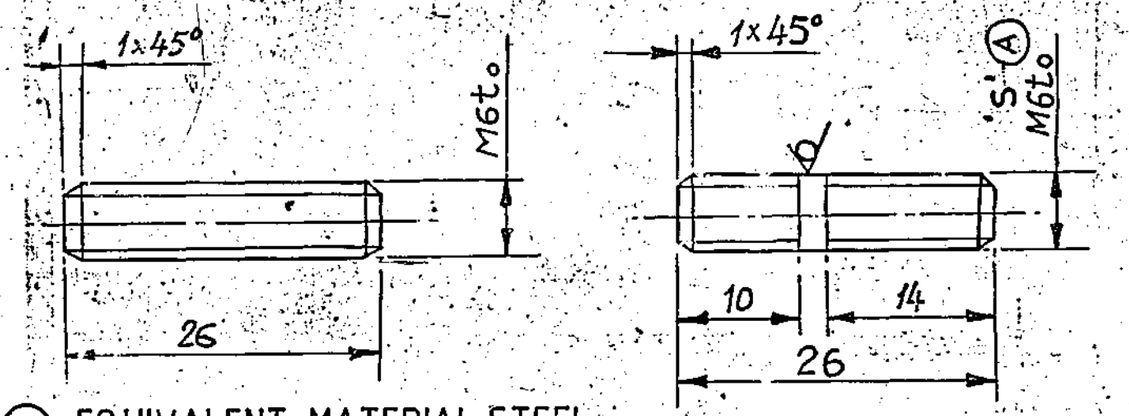

(C) EQUIVALENT MATERIAL STEEL
45C8 TO IS:1570

1. ALTERNATE MATERIAL IS STEEL 40, 50 GOST 1050-74
2. UNSPECIFIED LIMIT DEVIATIONS OF DIMENSIONS ARE AS FOLLOWS:
   FOR SHAFTS - AS PER B7
   FOR OTHERS - AS PER CM7
3. CUT THREAD AS PER STANDARD 82020-12, ISSUE 7.
4. COATING: CADMIUM-PLATED 3 MICRONS THICK, OILED
5. TECHNICAL REQUIREMENTS ARE AS PER GOST 1759-70.
6. UNTHREADED PORTION OF THE ROD MAY BE MADE WITHIN THE LIMITS OF THE ANGLE DIAMETER OF THE THREAD.
7. MECHANICAL DAMEGE TO COATING SUCH AS SCRATCHES, NOTCHES AND DENTS WHICH DO NOT EXPOSE STEEL ARE PERMITTED IN ASSY. UNITS.
8. (B) HARDNESS:- 27-32 HRC.

PILOT SAMPLE SHOULD BE APPROVED BY A H S P BEFORE BULK PRODUCTION

EXPLANATORY NOTE :

MATERIAL QUOTED : STEEL 45 GOST 1050-74.
45 = GRADE OF MATERIAL
CHEMICAL COMPOSITION : (AS PER GOST 1050-74)

GRADE OF STEEL	CONTENT OF ELEMENTS %							
	C	Si	Mn	Cr	P	S	Cu	Ni
				MAX	MAX	MAX	MAX	MAX
45	0.42-0.50	0.17-0.37	0.50-0.80	0.25	0.035	0.040	0.25	0.25

MECHANICAL PROPERTIES :

TENSILE STRENGTH Kgf/mm² = 61 (min)
YIELD POINT Kgf/mm² = 36 (min)
ELONGATION % = 16 (min)
REDUCTION IN AREA % = 40 (min)

(A) REPAIR SIZE DIMENSIONS

CATEGORY	DESIGNATION OF SIZE	SIZE ACCORDING TO WORKING DRG	REPAIR SIZE DIMENSION - 'S'
550-101 R1	DIAMETER	M6 x 1 to	M8 x 1.25 to
	DIAMETRAL PITCH		$7.188^{+0.152}_{+0.082}$

All other details as per working drg.

(B)* ALT. MATERIAL:- STEEL 709 M40 (EN-19) TO BS:970 PT.-1- 1983.

USED ON CБ20-01-07, CБ20-08-11, CБ20-09-6, CБ20-01-02-9, CБ20-06-09-2, CБ20-06-08-2, CБ20-27-05-4, CБ20-11-02-9.

ISSUE	DATE	NATURE OF AMENDMENTS
C	12-8-10	4th Alt.Comm.Meeting Minutes Point No.11 Dt: 26-10-09
B	12.01.08	AUTHY:-MIN. OF ALT. COM. MEET. POINT No.-2.12 Dt.-07-07-07
A	28.9.98	AUTHY : SPECN. FOR REPAIR SIZE DRGS. PART III

DRN
CHD
TCD
APPD V. Ramaraju
DATE 3-6-91
SCALE:- 2:1

MATERIAL:- * 45 GOST 1050-74

CONTROLLERATE OF QUALITY ASSURANCE (HEAVY VEHICLES) AVADI

DIMENSIONS IN mm
TOLERANCE ON DIMNS UNLESS OTHERWISE STATED IS:2102-69
ALL THREADS TO CONFORM TO

TITLE STUD M6X26

D S CAT NUMBER

DRAWING NUMBER 550-101

EST. WT. 0.004 kg.

TO BE STAMPED OR MARKED WHERE INDICATED THUS # 1 LETTERS)

ALL SHARP EDGES AND CORNERS TO BE REMOVED UNLESS OTHERWISE STATED MACHINED CORNERS TO HAVE R OUT SIDE R INSIDE EQUIVALENT CHAMFERS ARE PERMISSIBLE

ISSUE 1761-81

SIZE A3

DRAWING NUMBER
550-110

Rz80 (V)

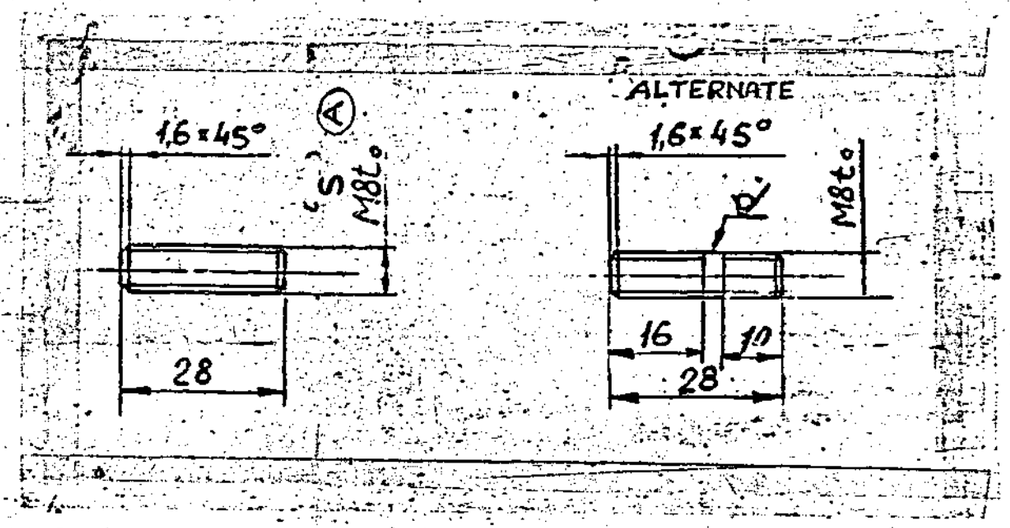

(D) ~~1. ALTERNATE MATERIAL IS STEEL 40,50 GOST 1050-74.~~

2. UNSPECIFIED LIMIT DEVIATIONS OF DIMENSIONS ARE AS FOLLOWS.
   FOR SHAFTS - AS PER B7,
   OTHERS - AS PER CM7.
3. MAKE THREADS AS PER STANDARD 82020-12, ISSUE 7.
4. TECHNICAL REQUIREMENTS ARE AS PER GOST 1759-70.
5. COATING : CADMIUM-PLATED, 3 MICRONS THICK, OILED.
6. UNTHREADED PORTION OF THE ROD MAY BE MADE WITHIN LIMITS OF THE ANGLE DIAMETER OF THE THREAD.
7. MECHANICAL DAMAGE TO COATINGS SUCH AS SCRATCHES, NOTCHES AND DENTS WHICH DO NOT EXPOSE STEEL IS ALLOWED IN ASSEMBLY UNITS.
(B) 8. HARDNESS:- 27-32 HRC.

(B) * MATERIAL:-
STEEL 709 M40 (EN-19) TO BS:- 970 PT.-I- 1983.

EXPLANATORY NOTE : (C)

MATERIAL QUOTED : STEEL 45 GOST 1050-74.
45 = GRADE OF MATERIAL.
CHEMICAL COMPOSITION : (AS PER GOST 1050-74)

GRADE OF STEEL	CONTENT OF ELEMENTS %							
	C	Si	Mn	Cr	P	S	Cu	Ni
				MAXIMUM				
45	0.42-0.50	0.17-0.37	0.50-0.80	0.25	0.035	0.040	0.25	0.25

MECHANICAL PROPERTIES :

TENSILE STRENGTH Kgf/mm²	=	61	(min)
YIELD POINT Kgf/mm²	=	36	(min)
ELONGATION %	=	16	(min)
REDUCTION IN AREA %	=	40	(min)

(A) REPAIR SIZE DIMENSIONS

CATEGORY	DESIGNATION OF SIZE	SIZE ACCORDING TO WORKING DRG	REPAIR SIZE DIMENSION 'S'
550-110 R1	DIAMETER	M 8 X 1.25 to	M 10 X 1.5 to
	DIAMETRAL PITCH		$9.026^{+0.170}_{+0.095}$

All other details as per working drg

PILOT SAMPLE SHOULD BE APPROVED BY A H S P BEFORE BULK PRODUCTION

EST. WT. 0.009 Kg.

TO BE STAMPED OR MARKED WHERE INDICATED THUS # (LETTERS)

ALL SHARP EDGES AND CORNERS TO BE REMOVED UNLESS OTHERWISE STATED MACHINED CORNERS TO HAVE R OUT SIDE R INSIDE EQUIVALENT CHAMFERS ARE PERMISSIBLE

ISSUE	DATE	NATURE OF AMENDMENTS
D	20.09.12	7.th ALTERATION COMMITTEE MEETING MINUTES POINT No.8. DATE:-11.04.2012.
C	9.6.09	3rd ALTERATION COMM. MINUTES POINT 5 DATE 27-2-09
B	12.01.08	AUTHY:-MIN. OF ALT. COM. MEET POINT. No.- 2.12 Dt.- 07-02-07
A	7.8.98	AUTHY: SPICN. FOR REPAIR SIZE DRGS PART III

DRN
CHD
TCD
APPD
DATE 25-4-87
SCALE:- 1:1
DIMENSIONS IN mm
TOLERANCE ON DIMNS UNLESS OTHERWISE STATED IS:2102-69
ALL THREADS TO CONFORM TO

MATERIAL:- * (C) ~~45 GOST 1050-74~~

USED ON CB 20-01-02-9
CB 20-27-05-4

CONTROLLERATE OF QUALITY ASSURANCE (HEAVY VEHICLES) AVADI

TITLE
STUD M8×28

D S CAT NUMBER

DRAWING NUMBER
550-110

SIZE A3

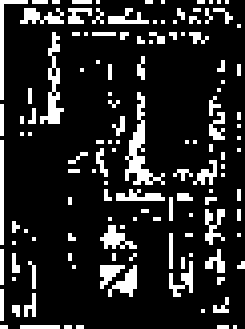

DRAWING NUMBER
550-114

Rz80

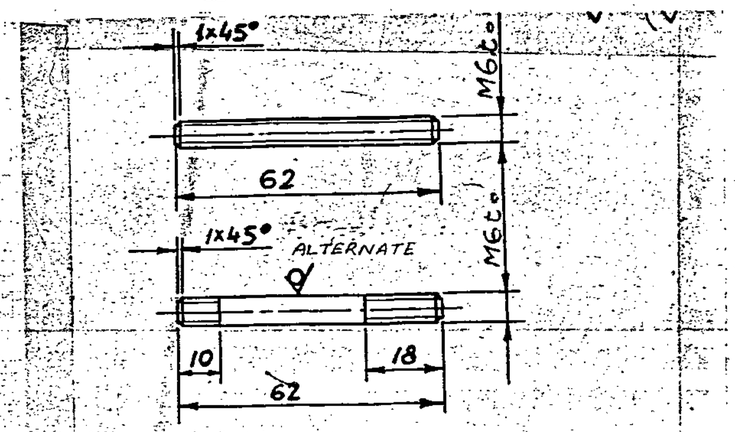

1. ALTERNATE MATERIAL IS STEEL 40, 50, GOST 105074.
2. UNSPECIFIED LIMIT DEVIATIONS OF DIMENSIONS ARE AS FOLLOWS:
   FOR SHAFTS - AS PER B_7
   OTHERS - AS PER CM_7.
3. MAKE THREAD AS PER STANDARD 82012-12, ISSUE 7.
4. TECHNICAL REQUIREMENTS ARE AS PER GOST 1759-70.
5. COATING: CADMIUM-PLATED 3 MICRONS THICK, OILED.
6. THE UNTHREADED PORTION OF THE ROD MAY BE MADE WITHIN THE LIMITS OF THE ANGLE DIAMETER OF THREAD.
7. IN THE ASSEMBLY UNITS, MECHANICAL DAMAGE TO THE COATINGS SUCH AS SCRATCHES, NOICHES AND DENTS WHICH DO NOT EXPOSE STEEL ARE PERMITTED.
8. (A) HARDNESS:- 27-32 HRC.

EXPLANATORY NOTE:

MATERIAL QUOTED: 45 GOST 1050-74.

ALTERNATE MATERIAL QUOTED: STEEL 40 & 50 GOST 1050-74.

STEEL 40, 45 & 50 = GRADE OF STEEL.

CHEMICAL COMPOSITION:

GRADE OF STEEL	CONTENT OF ELEMENTS %							
	C	Si	Mn	Cr	Ni	S	P	Cu
				MAXIMUM				
40	0·37-0·45	0·17-0·37	0·50-0·80	0·25	0·25	0·040	0·035	0·25
45	0·42-0·50	0·17-0·37	0·50-0·80	0·25	0·25	0·040	0·035	0·25
50	0·47-0·55	0·17-0·37	0·50-0·80	0·25	0·25	0·040	0·035	0·25

MECHANICAL PROPERTIES:

GRADE OF STEEL	TENSILE STRENGTH Kgf/mm²	YIELD POINT Kgf/mm²	ELONGATION %	REDUCTION IN AREA %	IMPACT STRENGTH Kgfm/cm²
	MINIMUM				
40	58	34	19	45	6
45	61	36	16	40	5
50	64	38	14	40	4

(A) * ALT. MATERIAL:-
STEEL 709 M40(EN-19)TO BS:- 970 PT.-I-1983.

KVD No. 63600

PILOT SAMPLE SHOULD BE APPROVED BY A H S P BEFORE BULK PRODUCTION.

EST. WT.	TO BE STAMPED OR MARKED WHERE INDICATED THUS #
0.012 Kg	(LETTERS)

ALL SHARP EDGES AND CORNERS TO BE REMOVED UNLESS OTHERWISE STATED MACHINED CORNERS TO HAVE R OUTSIDE R INSIDE EQUIVALENT CHAMFERS ARE PERMISSIBLE.

ISSUE	DATE	NATURE OF AMENDMENTS
A	10.01.08	AUTHY:-MIN. OF ALT. COM. MEET POINT No.-2.12 Dt.-07.02.07

DRN
CHD
TCD
APPD
DATE 3-5-89
SCALE :-1 : 1
DIMENSIONS IN mm.
TOLERANCE ON DIMNS UNLESS OTHERWISE STATED IS 2102-69
ALL THREADS TO CONFORM TO

MATERIAL :- * 45 GOST 1050-74

USED ON :- CG 20-27-05-4

CONTROLLERATE OF QUALITY ASSURANCE (HEAVY VEHICLES) AVADI

TITLE STUD M6X62

D S CAT NUMBER

DRAWING NUMBER 550-114

SIZE A2

DRAWING NUMBER
СБ. 20. 27. 05-7

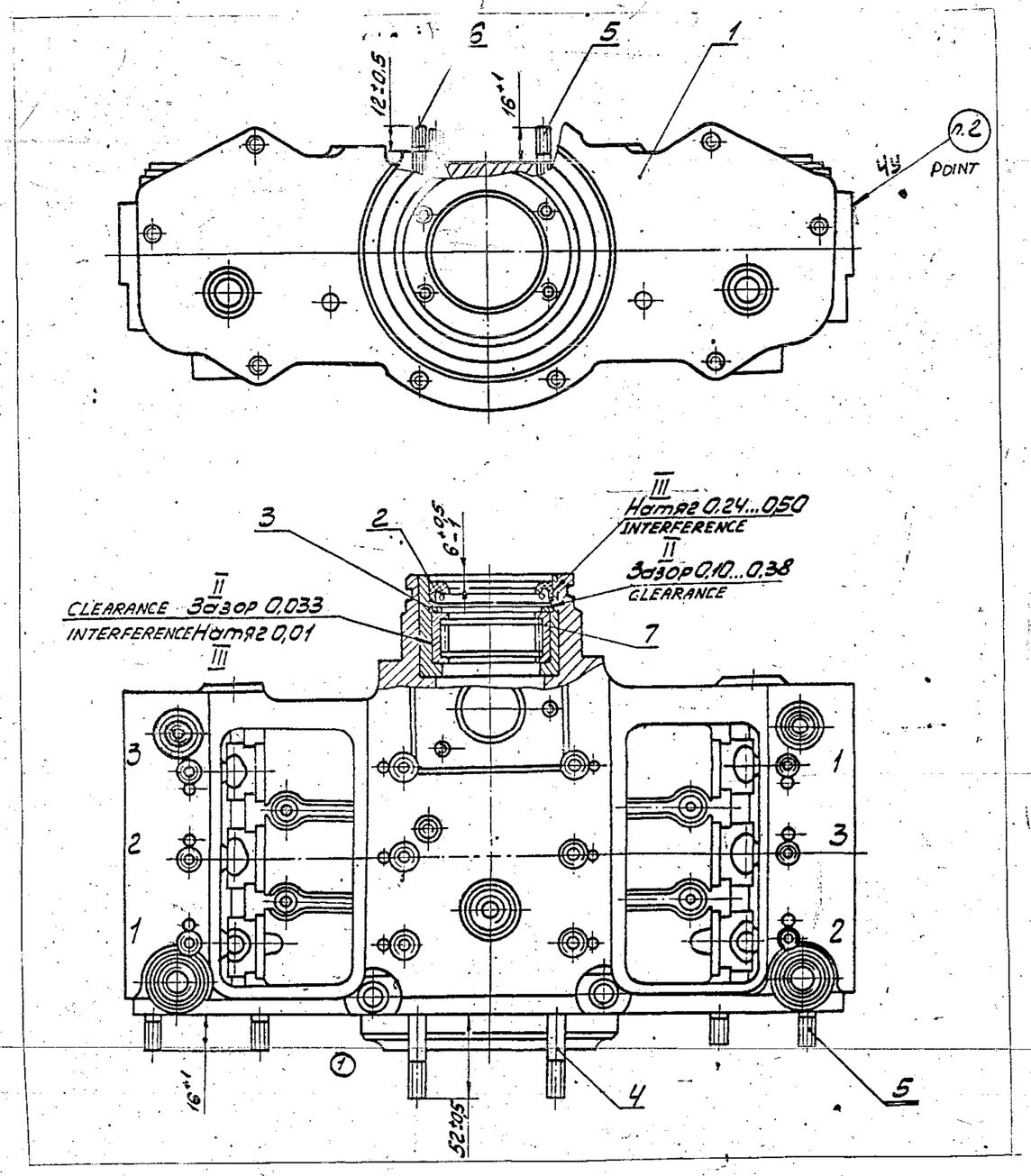

1. Корпус топливного насоса промыть на специальном моечном приспособлении под давлением с прочисткой внутренних поверхностей топливных каналов.
2. При отправке в запасные части маркировать: сб.20-27-05-7; шрифт ПО5 ГОСТ 2930-62.

I. 1. Wash the fuel pump body with the special washing device under pressure together with cleaning of the inner surfaces of the fuel channels.
2. Mark on the spares: сб.20-27-05-7; type ПО 5 GOST 2930-62.

DRG. INDIANISED BASED ON RUSSIAN ORIGINAL ISSUE-1 NOTN. No. 1677-85 Э

PILOT SAMPLE SHOULD BE APPROVED BY A H S P BEFORE BULK PRODUCTION.

EST. WT. 9,080 Kg.

TO BE STAMPED OR MARKED WHERE INDICATED THUS # (LETTERS)

ALL SHARP EDGES AND CORNERS TO BE REMOVED UNLESS OTHERWISE STATED MACHINED CORNERS TO HAVE R OUTSIDE R INSIDE EQUIVALENT CHAMFERS ARE PERMISSIBLE.

ISSUE	DATE	NATURE OF AMENDMENTS

DRN
CHD.
TCD
APPD
DATE 16-2-93
SCALE :- 1:2
DIMENSIONS IN mm
TOLERANCE ON DIMNS UNLESS OTHERWISE STATED IS 2102-69
ALL THREADS TO CONFORM TO

MATERIAL :- —

USED ON :- СБ 20-27-00-4

CONTROLLERATE OF QUALITY ASSURANCE (HEAVY VEHICLES)
A V A D I

TITLE Assy
FUEL PUMP BODY

D S CAT NUMBER

DRAWING NUMBER
СБ.20.27.05-7

SIZE A2

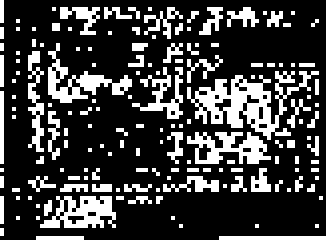

CB 20-27-00-4

T/L CREATED BASED ON RUSSIAN ORIGINAL ISSUE-1 NOTN. No. 1677-859

USED ON	ITEM	DRAWING NUMBER	D S CAT NUMBER	DESCRIPTION	No. OFF	REMARKS
		CB 20-27-05-7		FUEL PUMP BODY		
		& ITEM LIST				
	1	CB 20-27-01-7		FUEL PUMP BODY	1	
		& ITEM LIST				
	2	CB 20-27-18		GLAND	1	
		& ITEM LIST				
	3	20-27-333		LOCKING RING	1	
	4	550-114		STUD M6 × 62	4	
	5	550-101		STUD M6 × 26	9	
	6	550-110		STUD M8 × 28	1	
	7	N.D		BEARING 4024107	1	
				GOST 4657-82 ETY 500		

ISSUE	DATE	NATURE OF AMENDMENTS	ISSUE	DATE	NATURE OF AMENDMENTS

DRN		CONTROLLERATE OF QUALITY ASSURANCE (HEAVY VEHICLES) AVADI.		
CHD		TITLE: FUEL PUMP BODY		
TCD				
APPD		SHT. No. 1 OF 1	D S CAT NUMBER	ITEM LIST FOR CB 20-27-05-7
DATE	16-2-93			

DRAWING NUMBER
20-27-49

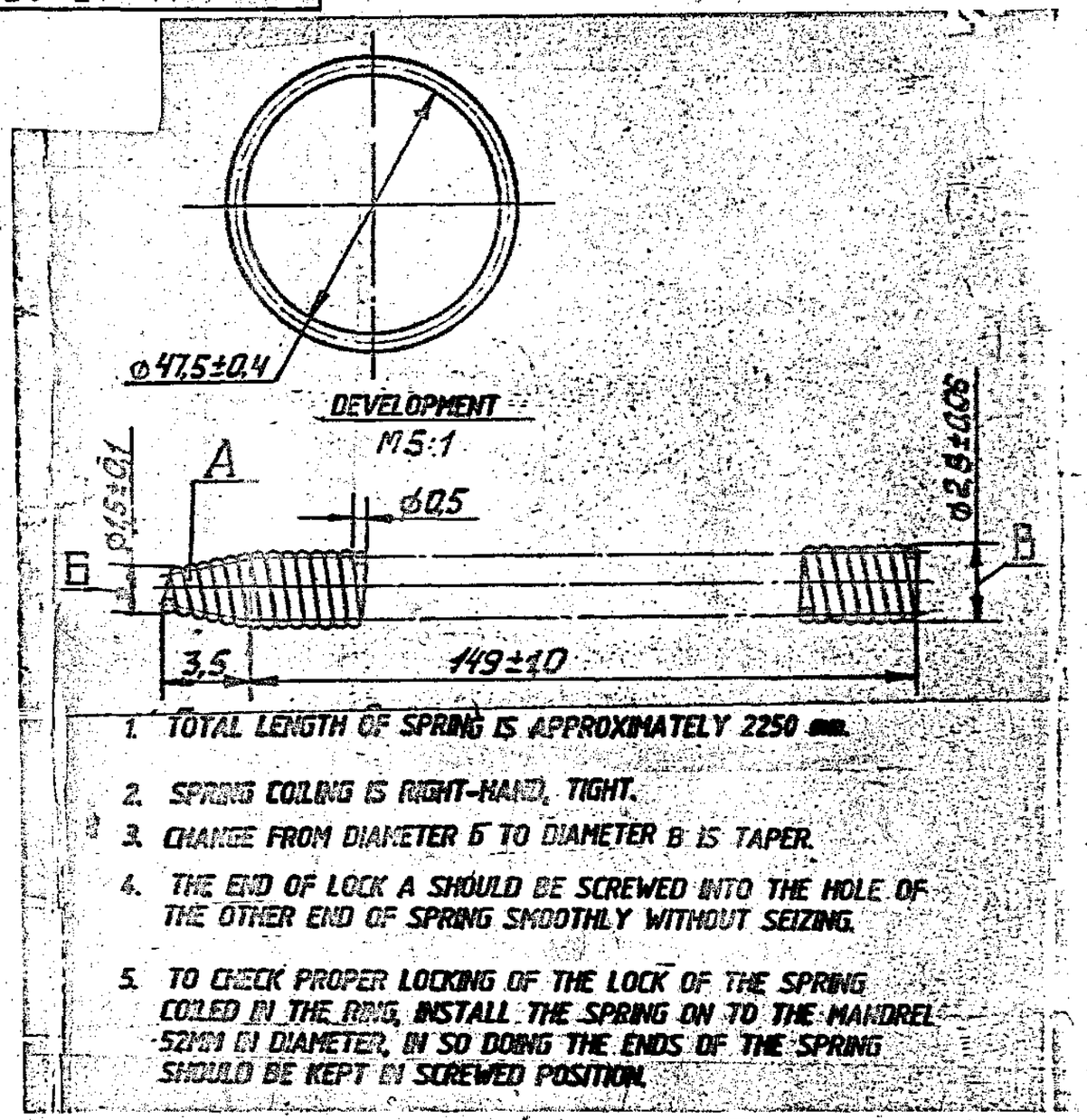

1. TOTAL LENGTH OF SPRING IS APPROXIMATELY 2250 mm.
2. SPRING COILING IS RIGHT-HAND, TIGHT.
3. CHANGE FROM DIAMETER Б TO DIAMETER B IS TAPER.
4. THE END OF LOCK A SHOULD BE SCREWED INTO THE HOLE OF THE OTHER END OF SPRING SMOOTHLY WITHOUT SEIZING.
5. TO CHECK PROPER LOCKING OF THE LOCK OF THE SPRING COILED IN THE RING, INSTALL THE SPRING ON TO THE MANDREL 52MM IN DIAMETER, IN SO DOING THE ENDS OF THE SPRING SHOULD BE KEPT IN SCREWED POSITION.

7. EXPLANATORY NOTE :-

MATERIAL QUOTED :- WIRE I-0,5 GOST 9389-75

CARBON STEEL COLD DRAWN WIRE, FIRST (I) CATEGORY, NORMAL MANUFACTURING ACCURACY, DIAMETER OF WIRE 0,50 mm WITH TOLERANCE ±0,02 mm , MANUFACTURED FROM STEEL GRADE KT-2 AND SK-7 TO GOST 9389-75.

a) CHEMICAL COMPOSITION :

STEEL OF GRADE	CONTENT OF ELEMENTS %							
	C	Mn	Si	S	P	Cr	Ni	Cu
				MAXIMUM				
KT-2	0,86 - 0,91	0,20 - 0,40	0,17 - 0,37	0,020	0,020	0,05	0,05	0,10
SK-7	0,68 - 0,76	0,50 - 0,80	0,17 - 0,37	0,030	0,020	0,05	0,05	0,04

b) MECHANICAL PROPERTIES :

TENSILE STRENGTH = 265 - 300 Kgf/mm²

NO. OF TWISTS = 16 (MIN)

6. COATING : CHEMICALLY OXIDIZED , OILED.

PILOT SAMPLE SHOULD BE APPROVED BY A H S P BEFORE BULK PRODUCTION

EST. WT. 0,0015 Kg.

TO BE STAMPED OR MARKED WHERE INDICATED THUS ⫩ (LETTERS)

ALL SHARP EDGES AND CORNERS TO BE REMOVED UNLESS OTHERWISE STATED MACHINED CORNERS TO HAVE R OUT SIDE, R INSIDE EQUIVALENT CHAMFERS ARE PERMISSIBLE.

ISSUE	DATE	NATURE OF AMENDMENTS

DRN
CHD
TCD
APPD
DATE 25-4-1987
SCALE :- 1 : 1
DIMENSIONS IN mm
TOLERANCE ON DIMNS UNLESS OTHERWISE STATED IS:2102-69
ALL THREADS TO CONFORM TO

MATERIAL :- WIRE I-0,5 GOST 9389-75

USED ON CB 20-27-18

CONTROLLERATE OF QUALITY ASSURANCE(HEAVY VEHICLES) AVADI

TITLE CUP SPRING

D S CAT NUMBER

DRAWING NUMBER 20-27-49

SIZE A3

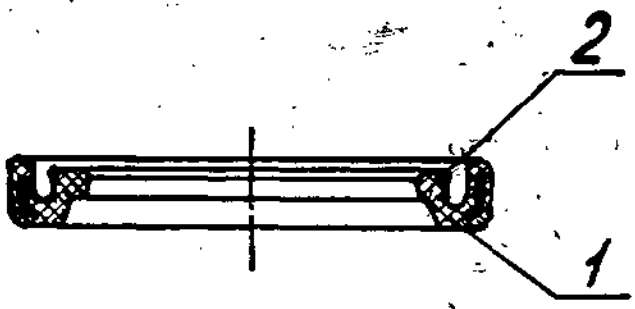

FORMAT	ZONE	REF. NO.	DESIGNATION	DESCRIPTION	QTY.	REMARKS
				ASSEMBLY UNITS		
		1	СБ 20-27-19	CUP BODY ASSY	1	
				PARTS		
		2	20-27-49	CUP SPRING	1	

KVD NO 63400

PILOT SAMPLE SHOULD BE APPROVED BY A H S P BEFORE BULK PRODUCTION

KVD NO 63400

ISSUE	DATE	NATURE OF AMENDMENTS

DRN
CHD
TCD
APPD
DATE 25-04-87

SCALE - 1:1
DIMENSIONS IN mm
TOLERANCE ON DIMS UNLESS OTHERWISE STATED
ALL THREADS CONFORM TO

EST. MASS 0.0255 Kg

TO BE STAMPED OR MARKED WHERE INDICATED THUS # (LETTERS)

ALL SHARP EDGES AND CORNERS TO BE REMOVED UNLESS OTHERWISE STATED MACHINED CORNERS TO HAVE R OUTSIDE R INSIDE EQUIVALENT CHAMFERS ARE PERMISSIBLE

MATERIAL - —

USED ON - СБ 20-27-05-7 7

CONTROLLERATE OF INSPECTION (HEAVY VEHICLES) AVADI

TITLE - CUP

DESCAT NUMBER -

DRAWING NUMBER СБ 20-27-18

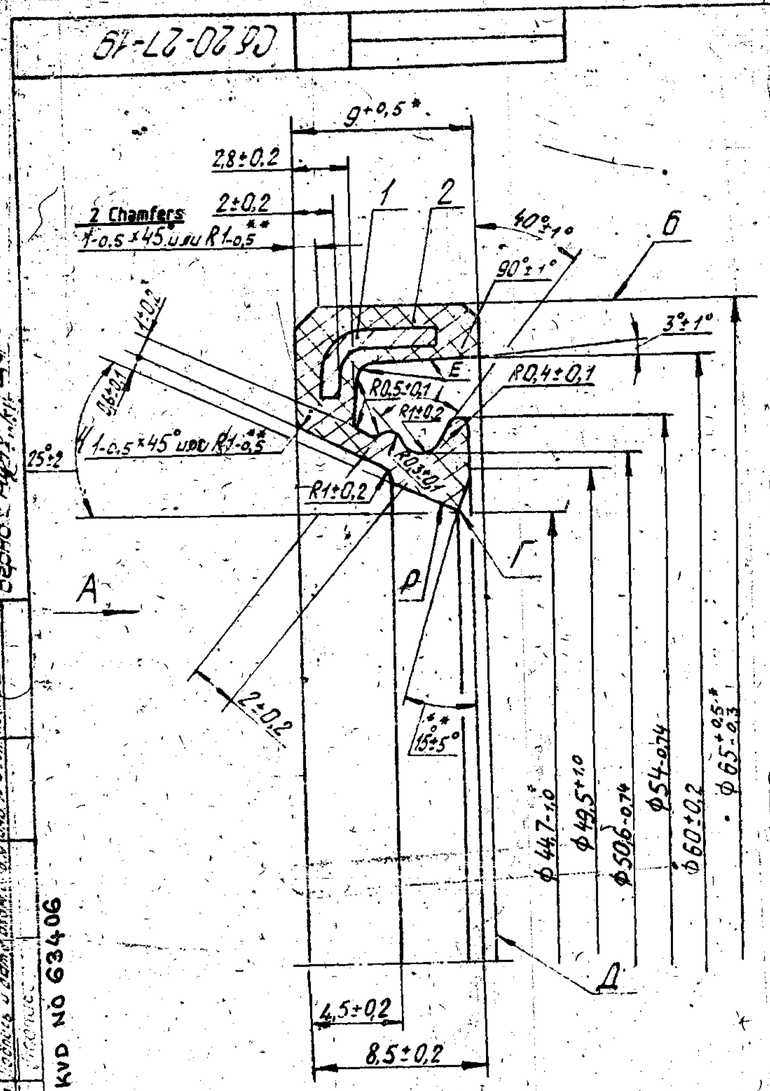

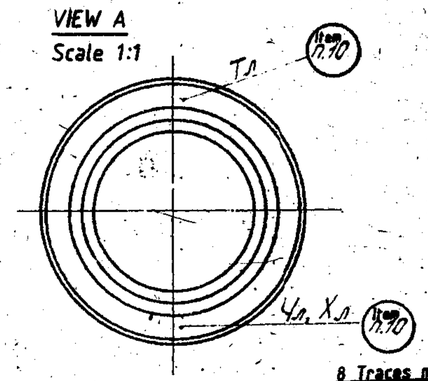

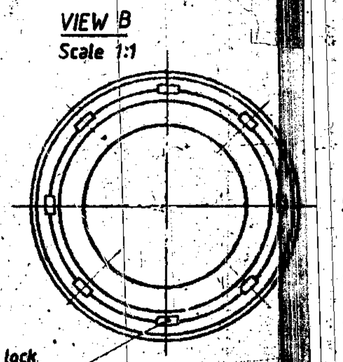

1. All dimensions except for these marked with asterisk (*) are provided with tools .
2. Working surface is marked as P. Machining is not allowed.
3. Edge Г should be even : Tears out excess metal and burrs are not allowed .
4. Excess cement and non-rubberized sections of reinforcement are allowed on surface E.
5. Part surface may have burrs removal traces at parting points of a die.
6. Surface А may have a step, 0,5 mm high along the perimeter .
7. * * Grinding or under cutting is permitted,
8. Runout of surface Б with respect to the axis of surface p or edge Г should not exceed 0,3 mm.
9. Check internal diameter with a gauge .
10. Apply marking by meanse of imprint of die engraving, with type n. 0-2,5 GOST 2930-62, being projected beyond the part surface by not more than 0,15 to 0,20 mm (xn - 46x65x9) .
11. Mark date of manufacture of batch of parts on the tag .
12. All dimensions marked with asterisk (*) should be checked,

KVD NO. 63406

PILOT SAMPLE SHOULD BE APPROVED BY A H S P BEFORE BULK PRODUCTION

		EST. MASS 0,030 Kg	TO BE STAMPED OR MARKED WHERE INDICATED THUS ⊕ LETTERS'
		ALL SHARP EDGES AND CORNERS TO BE REMOVED UNLESS OTHERWISE STATED MACHINED CORNERS TO HAVE R OUTSIDE R INSIDE EQUIVALENT CHAMFERS ARE PERMISSIBLE	
ISSUE	DATE	NATURE OF AMENDMENTS	
DRN		SCALE 5:1	MATERIAL — USED ON CB 20-27-18
CHD		DIMENSIONS IN mm	CONTROLLERATE OF INSPECTION (HEAVY VEHICLES) AVADI
TCD		TOLERANCE ON DIMNS UNLESS OTHERWISE STATED	TITLE CUP BODY ASSY
APPD		ALL THREADS CONFORM	D S CAT NUMBER CB 20-27-18

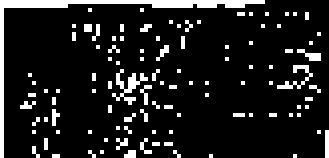

DRAWING NUMBER
20-27-330-1

Rz 40 (√)

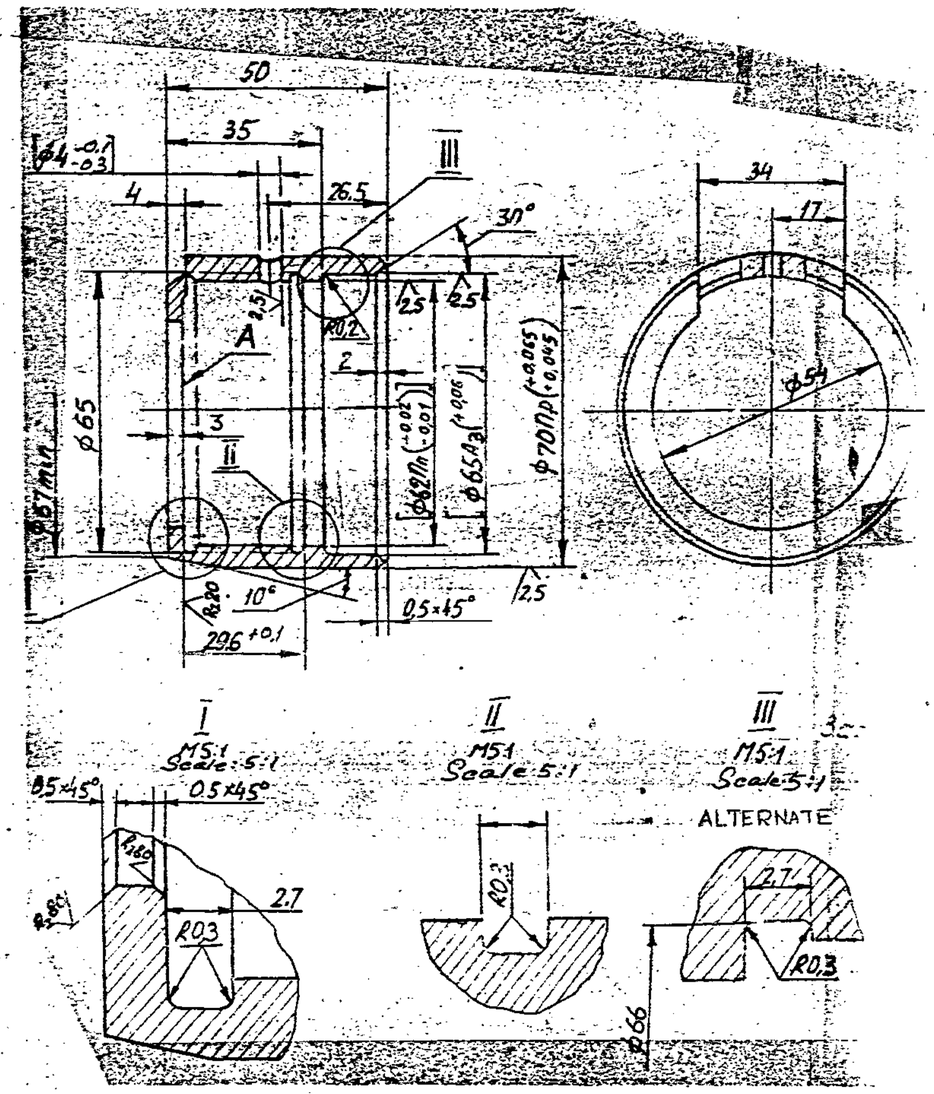

1. unspecified limit deviations of dimensions are as follows: For holes - As per A_7
   shafts - As per B_7
   others - As per CM_7
2. Perform machining of surface A and also as per dimensions given in the square brackets in the mechanical unit.
3. Alternate material is steel 30, 40, 50 as per GOST 1050-74

EXPLANATORY NOTE:

Material Quoted : 45 GOST 1050-74

Alternative material quoted: steel 30, 40, 50 as per GOST 1050-74

Chemical Composition

Grade of steel	C	Si	Mn.	Cr.	P	S	Cu	Ni
				MAXIMUM				
30	0.27-0.35	0.17-0.37	0.50-0.80	0.25	0.035	0.040	0.25	0.25
40	0.37-0.45	0.17-0.37	0.50-0.80	0.25	0.035	0.040	0.25	0.25
45	0.42-0.50	0.17-0.37	0.50-0.80	0.25	0.035	0.040	0.25	0.25
50	0.47-0.55	0.17-0.37	0.50-0.80	0.25	0.035	0.040	0.25	0.25

Mechanical Properties:

Grade of steel	Tensile strength kgf/mm² (min)	Yield Point kgf/mm² (min)	Elongation %	Reduction in area % (min)	Impact strength kgf/cm² (min)
30	50	30	21	50	8
40	58	34	19	45	6
45	61	36	16	40	5
50	64	38	14	40	4

PILOT SAMPLE SHOULD BE APPROVED BY A H S P BEFORE BULK PRODUCTION.

EST. WT. 0.250 kg.

TO BE STAMPED OR MARKED WHERE INDICATED THUS # (LETTERS)

ALL SHARP EDGES AND CORNERS TO BE REMOVED UNLESS OTHERWISE STATED MACHINED CORNERS TO HAVE R OUTSIDE R INSIDE EQUIVALENT CHAMFERS ARE PERMISSIBLE.

ISSUE	DATE	NATURE OF AMENDMENTS

DRN
CHD
TCD
APPD
DATE 17-4-89
SCALE :- 1:1
DIMENSIONS IN :-
TOLERANCE ON DIMNS UNLESS OTHERWISE STATED IS 2102-69
ALL THREADS TO CONFORM TO

MATERIAL :- 45 GOST 1050-74

USED ON :- CB 20-27-01-A 7

CONTROLLERATE OF QUALITY ASSURANCE (HEAVY VEHICLES)
AVADI

TITLE SLEEVE

DUPLICAT NUMBER

DRAWING NUMBER 20-27-330-1

DRAWING NUMBER
20_27_335_2

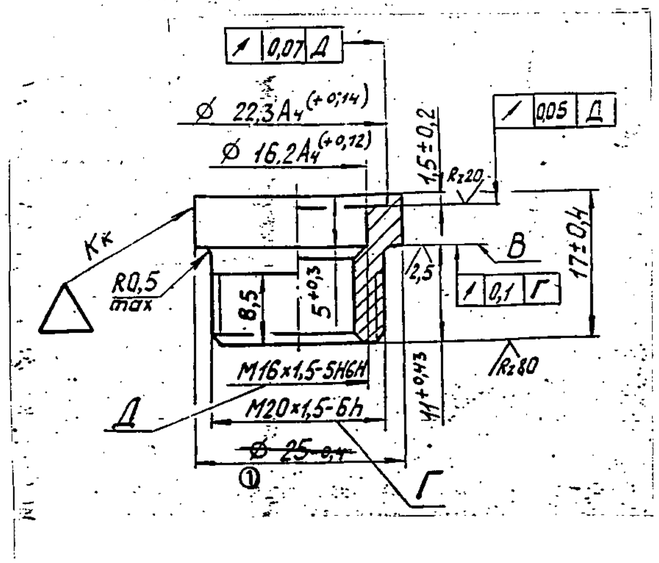

1. CRACKS, BURRS, MARKS DENTS AND OTHER MECHANICAL DAMAGES ARE NOT ALLOWED.
2. THREAD SHOULD BE CLEAN AND SHOULD NOT HAVE BURRS, THREAD CUTS AND DENTS.
3. COATING : Cd 9. Cr.
   THREADS TO BE CHECKED BEFORE COATING.
   ABSENCE OF COATING ON INTERNAL SURFACES IS ALLOWED.
4. DURING FACING 'B' PLUNGE-CUT OF TOOL ALONG CYLINDRICAL SURFACE IS ALLOWED TO A DEPTH MAXIMUM 0.3mm.
5. THREAD MARK FOR Ø 16.2 A4 IS ALLOWED.
6. ALTERNATE MATERIAL - STEEL 35, 40, 50 GOST 1050-74.

EXPLANATORY NOTE :-

7. MATERIAL QUOTED: ① HEX BAR 25-5 GOST 8560-78 / 45-6 GOST 1051-73

Alt Matl Quoted : STEEL 35, 40, 50, GOST 1050-74.

① HEX BAR 25 mm A/F

ACCURACY CLASS 5 AS PER GOST 8560-78

35, 40, 45, 50, GRADE OF STEEL.

a) CHEMICAL COMPOSITION (AS PER GOST 1050-74

GRADE OF STEEL	CONTENT OF ELEMENTS %							
	C	Si	Mn	Cr	P	S	Cu	Ni
				MAXIMUM				
35	0.32-0.40	0.17-0.37	0.50-0.80	0.25	0.035	0.040	0.25	0.25
40	0.37-0.45	0.17-0.37	0.50-0.80	0.25	0.035	0.040	0.25	0.25
45	0.42-0.50	0.17-0.37	0.50-0.80	0.25	0.035	0.040	0.25	0.25
50	0.47-0.55	0.17-0.37	0.50-0.80	0.25	0.035	0.040	0.25	0.25

b) MECHANICAL PROPERTIES AS PER GOST 1050-74

GRADE OF STEEL	ULTIMATE TENSILE STRENGTH Kgf/mm² (min)	YIELD POINT Kgf/mm² (min)	% ELONGATION (min)	REDUCTION IN AREA % (min)	IMPACT STRENGTH Kgf/mm² (min)
35	54	32	20	45	7
40	58	34	19	45	6
45	61	36	16	40	5
50	64	38	14	40	4

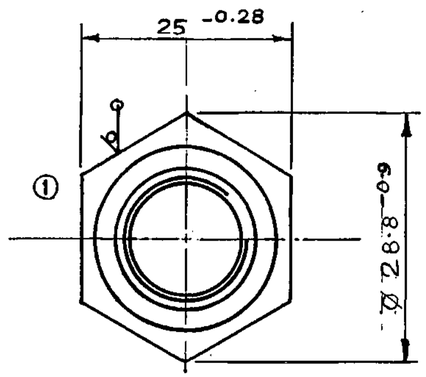

PILOT SAMPLE SHOULD BE APPROVED BY A H S P BEFORE BULK PRODUCTION.

EST. WT.	TO BE STAMPED OR MARKED WHERE INDICATED THUS #
0·017 Kg.	(LETTERS)

ALL SHARP EDGES AND CORNERS TO BE REMOVED UNLESS OTHERWISE STATED MACHINED CORNERS TO HAVE R OUT - SIDE R INSIDE EQUIVALENT CHAMFERS ARE PERMISSIBLE.

ISSUE	DATE	NATURE OF AMENDMENTS
1	16.2.01	EFA/P/PDO/023 dt 22.9.2000

DRN	
CHD	
TCD	
APPD	
DATE	28-2-01
SCALE :-	2 : 1
DIMENSIONS IN mm	
TOLERANCE ON DIMNS UNLESS OTHERWISE STATED IS 2102 - 6	
ALL THREADS TO CONFORM TO	

MATERIAL :- ① hex bar 25-5 GOST 8560-78 / 45-6 GOST 1051-73

USED ON :- C6 20_27_01_7

CONTROLLERATE OF QUALITY ASSURANCE (HEAVY VEHICLES) AVADI

TITLE : BUSHing.

D S CAT NUMBER

DRAWING NUMBER 20_27_335_2

K.V.D. No. 63445
Original date : 6-11-89
SIZE A2

DRAWING NUMBER
20-29-35

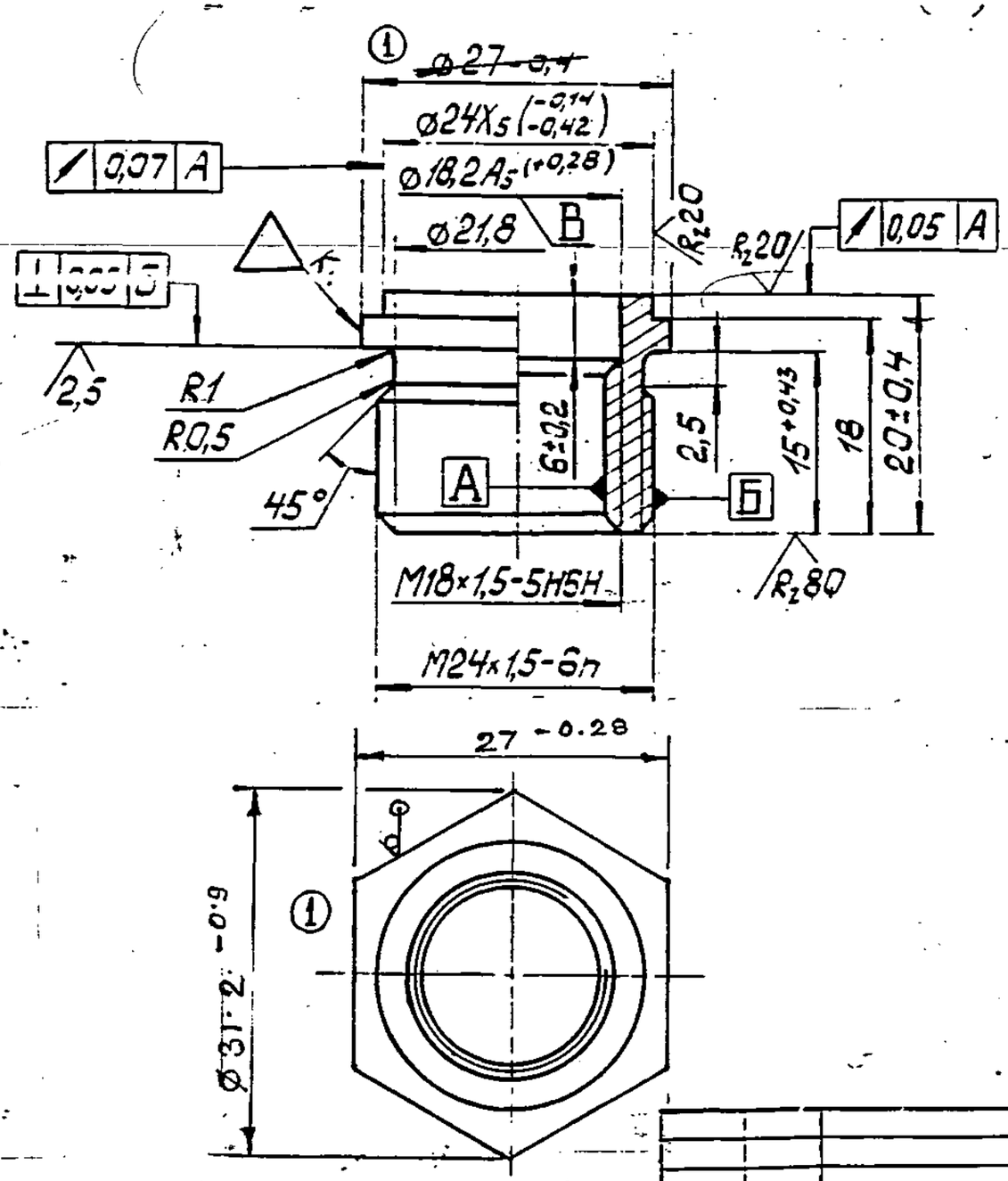

1. Alt. Mat'l. IS STEEL 40, 50 GOST 1050-74.
2. UNSPECIFIED LIMIT DEVIATIONS OF DIMENSIONS ARE AS FOLLOWS :
   FOR HOLES - AS PER A7, FOR SHAFTS - AS PER B7
   FOR OTHERS - AS PER CM7
3. THREAD TRACE ON SURFACE 'B' IS PERMITTED.
4. COATING : CADMIUM-PLATED, 9 MICRONS THICK OILED ABSENCE OF COATING ON THE INTERNAL SURFACE IS ALLOWED.

(1A) EQUIVALENT MATERIAL
STEEL 080M40 (EN8) TO BS:970 OR
45 CB TO IS:1570

①* 27-5 GOST 8560-78
45 GOST 1051-74

PILOT SAMPLE SHOULD BE APPROVED BY A H S P BEFORE BULK PRODUCTION

EST. WT. 0,03 Kg

TO BE STAMPED OR MARKED WHERE INDICATED THUS ⊕ (LETTERS)

ALL SHARP EDGES AND CORNERS TO BE REMOVED UNLESS OTHERWISE STATED MACHINED CORNERS TO HAVE R OUT SIDE & INSIDE EQUIVALENT CHAMFERS ARE PERMISSIBLE

ISSUE	DATE	NATURE OF AMENDMENTS
1A	10-7-10	4th ALT. COMM. Mtg. MINUTES POINT No 7 DT 26-10-09
1	16.2.01	EFA/P/PDO/023 dt 22.9.2000

DRN
CHK
APPR
DATE 17-3-90
SCALE 2:1
DIMENSIONS IN mm
TOLERANCE ON DIMS UNLESS OTHERWISE STATED IS:2102-69
ALL THREADS TO CONFORM TO

MATERIAL :- Hexbar
~~45 GOST 1050-74~~ *①

USED ON: CS 20-27-01-4
CS 20-29-08-8

CONTROLLERATE OF QUALITY ASSURANCE (HEAVY VEHICLES) AVADI

TITLE
BUSHING

D S CAT NUMBER

DRAWING NUMBER
20-29-35

KVD No. 63465

SIZE A3

DRAWING NUMBER
20_29_36

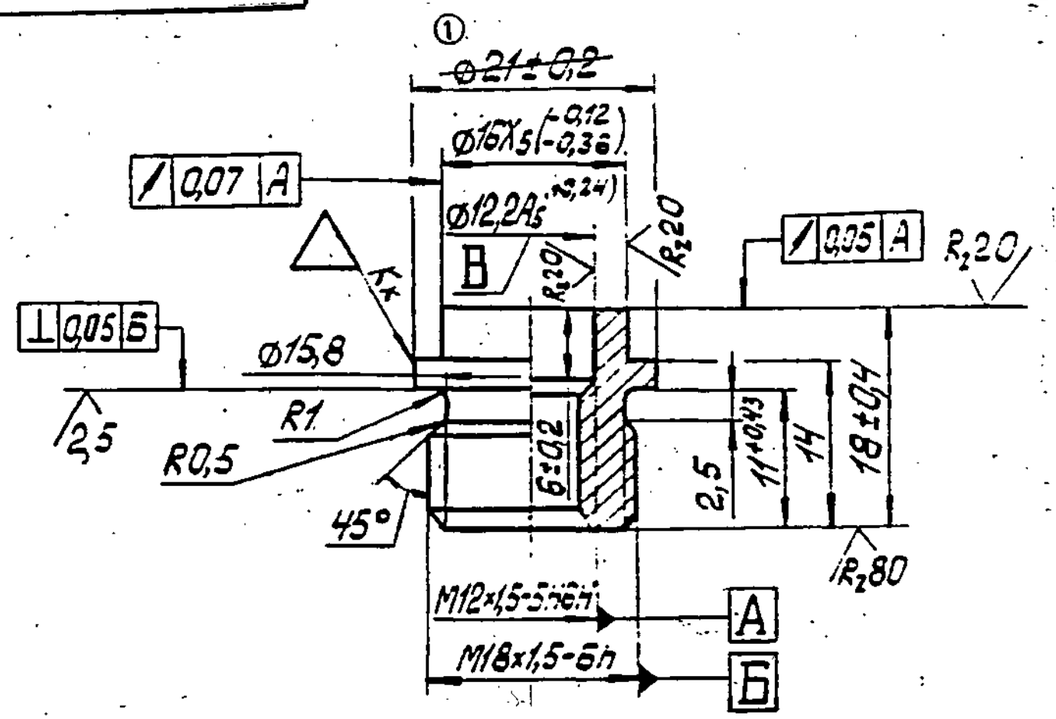

1. Alt. Matl. IS STEEL 40, 50 GOST 1050-74.
2. UNSPECIFIED LIMIT DEVIATIONS OF DIMENSIONS ARE AS FOLLOWS:
   FOR HOLES - AS PER A7 , SHAFTS - AS PER B7 , OTHERS - AS PER CM7
3. THREAD TRACE ON SURFACE B IS PERMITTED.
4. COATING : CADMIUM-PLATED 9 MICRONS THICK, OILED ABSENCE OF THE COATING ON THE INTERNAL SURFACE IS ALLOWED.

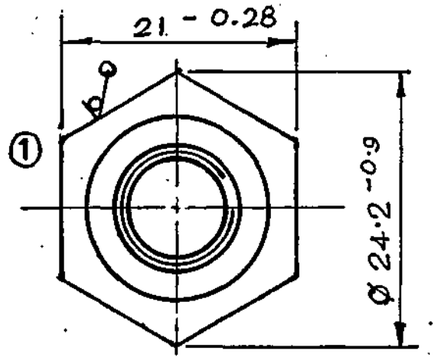

(1A) EQUIVALENT MATERIAL
STEEL 080 M40 (EN8) TO BS:970 OR
45 CB TO IS:1570

PILOT SAMPLE SHOULD BE APPROVED BY A H S P BEFORE BULK PRODUCTION

EST. WT. 0·18 kg

TO BE STAMPED OR MARKED WHERE INDICATED THUS # (LETTERS)

ALL SHARP EDGES AND CORNERS TO BE REMOVED UNLESS OTHERWISE STATED MACHINED CORNERS TO HAVE R OUT SIDE R INSIDE EQUIVALENT CHAMFERS ARE PERMISSIBLE.

ISSUE	DATE	NATURE OF AMENDMENTS
1A	10-7-10	4th ALT. COMM. Mtg. MINUTES POINT No 7 DT. 26-10-09
1	16.2.01	EFA/P/PDO/023 dt 22.9.2000

DRN		MATERIAL:- ① hex bar 21-5 GOST 8560-78; 45-Б GOST 1051-73
CHD		USED ON CЬ 20-27-01-4; CЬ 20-29-08-8
TCD		
APPD		
DATE	28-2-01.	CONTROLLERATE OF QUALITY ASSURANCE (HEAVY VEHICLES) AVADI.
SCALE:- 2 : 1		
DIMENSIONS IN mm		TITLE BUSHING
TOLERANCE ON DIMNS UNLESS OTHERWISE STATED IS : 2102-69.		
ALL THREADS TO CONFORM TO		D S CAT NUMBER
		DRAWING NUMBER 20_29_36

SIZE A3

DRAWING NUMBER
20-52-01

Rz40 √(√)

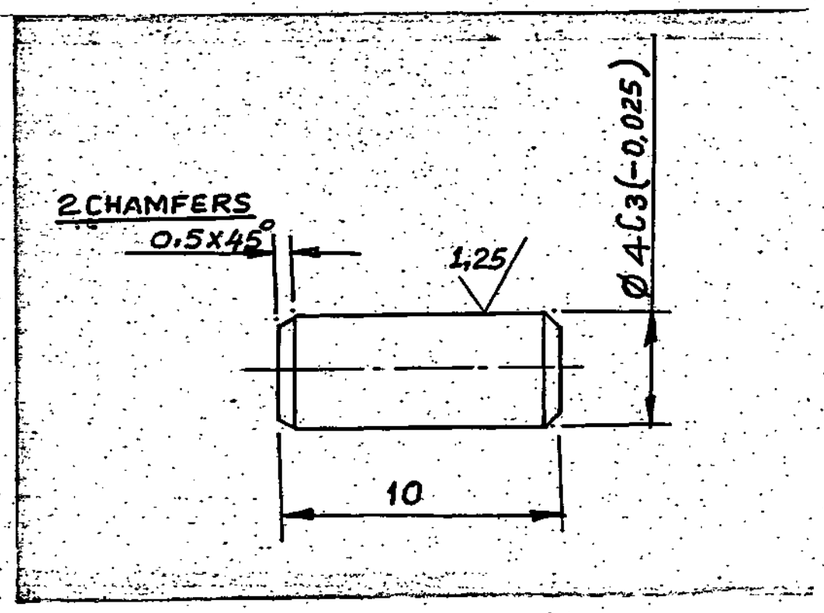

EXPLANATORY NOTE:

MATERIAL QUOTED : 45 GOST 1050-74

45 = GRADE OF STEEL

CHEMICAL COMPOSITION %

CARBON	= 0.42 - 0.50	
SILICON	= 0.17 - 0.37	
MANGANESE	= 0.50 - 0.80	
CHROMIUM	= 0.25	MAXIMUM
PHOSPHORUS	= 0.035	MAXIMUM
SULPHUR	= 0.040	MAXIMUM
COPPER	= 0.25	MAXIMUM
NICKEL	= 0.25	MAXIMUM

MECHANICAL PROPERTIES:

ULTIMATE TENSILE STRENGTH Kgf/mm² = 61 (Min)

YIELD POINT Kgf/mm² = 36 (Min)

ELONGATION % = 16 (Min)

IMPACT STRENGTH Kgfm./cm² = 5 (Min)

1. UNSPECIFIED LIMIT DEVIATIONS OF DIMENSIONS FOR SHAFTS ARE AS PER B7.
2. COATING : CHEMICALLY OXIDIZED, OILED.

(A) EQUIVALENT MATERIAL
STEEL 080 M40 (EN8) TO BS : 970 OR
45 CB TO IS : 1570

EXPLANATORY NOTE ADDED ON 20-6-92

PILOT SAMPLE SHOULD BE APPROVED BY A H S P BEFORE BULK PRODUCTION

EST. WT. 0.001 kg.

TO BE STAMPED OR MARKED WHERE INDICATED THUS # (LETTERS)

ALL SHARP EDGES AND CORNERS TO BE REMOVED UNLESS OTHERWISE STATED MACHINED CORNERS TO HAVE R OUT SIDE R INSIDE EQUIVALENT CHAMFERS ARE PERMISSIBLE.

ISSUE	DATE	NATURE OF AMENDMENTS
A	10-7-10	4th ALT. COMM. Mtg. MINUTES POINT No 7 DT 26-10-09

DRN		
CHD		
TCD		
APPD		
DATE	5-4-87	
SCALE:-	5:1	
DIMENSIONS IN mm		
TOLERANCE ON DIMNS UNLESS OTHERWISE STATED IS : 2102-69.		
ALL THREADS TO CONFORM TO		

MATERIAL:- 45 GOST 1050-74

USED ON C520-27-01-~~A~~ 7

CONTROLLERATE OF QUALITY ASSURANCE (HEAVY VEHICLES) AVADI.

TITLE ROUND LOCK PIN 4x10

D S CAT NUMBER

DRAWING NUMBER 20-52-01

SIZE A3

DRAWING NUMBER
327-21

Rz20 (✓)

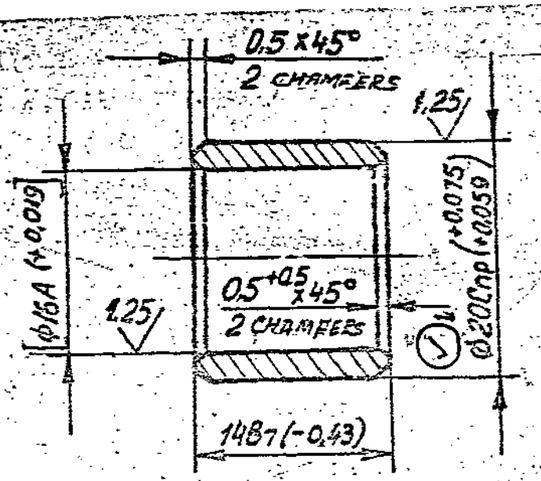

1. CARRY OUT FINAL MACHINING AS PER THE DIMENSION GIVEN IN SQUARE BRACKETS IN ASSY. 20-27-01-4.

2. ALTERNATE MATERIAL IS BRASS Л C59-1, GOST 15527-70.

3. REPAIR SIZE DIMENSIONS ADDED BASED ON LT. No. 82847/OH/QAS/ED DT. 27 MAR 95 AS FOLLOWS:

REPAIR SIZE DIMENSIONS ADDED WHERE INDICATED THUS ⊘

SL. No.	R_1	R_2	REMARKS
⊘1	$\phi 20 \cdot 15^{+0\cdot075}_{+0\cdot059}$	$\phi 20 \cdot 30^{+0\cdot075}_{+0\cdot059}$	1. ALL OTHER CONDITIONS AS PER STD.DRG 2. MARK REPAIR SIZE.

EXPLANATORY NOTE :

3. MATERIAL QUOTED : BRASS Л63 GOST 15527-70.

ALTENATE MATERIAL QUOTED : BRASS ЛC59-1 GOST 15527-70

CHEMICAL COMPOSITION :

BASIC ELEMENTS		GRADE Л63	GRADE ЛC59-1
COPPER	=	62.0 - 65.0	57.0 - 60.0
LEAD	=	-	0.8 - 1.9
ADMIX ZINC		REMAINDER	REMAINDER
LEAD	=	0.07 (max)	-
IRON	=	0.2 (max)	0.5 (max)
ANTIMONY	=	0.005 (max)	0.010 (max)
BISMUTH	=	0.002 (max)	0.003 (max)
PHOSPHORUS	=	0.01 (max)	0.02 (max)
TOTAL	=	0.5 (max)	0.75 (max)

PILOT SAMPLE SHOULD BE APPROVED BY A H S P BEFORE BULK PRODUCTION

EST. WT. 0.013 Kg

TO BE STAMPED OR MARKED WHERE INDICATED THUS ⋕ (LETTERS)

ALL SHARP EDGES AND CORNERS TO BE REMOVED UNLESS OTHERWISE STATED MACHINED CORNERS TO HAVE R OUT SIDE R INSIDE EQUIVALENT CHAMFERS ARE PERMISSIBLE.

ISSUE	DATE	NATURE OF AMENDMENTS

DRN
CHD
TCD
APPD
DATE 04-05-87
SCALE:- 2 : 1
DIMENSIONS IN mm
TOLERANCE ON DIMNS UNLESS OTHERWISE STATED IS:2102-69
ALL THREADS TO CONFORM TO

MATERIAL:- Л63 GOST 15527-70

USED ON CB 3327-01-10
CB 20-27-01-4

CONTROLLERATE OF QUALITY ASSURANCE(HEAVY VEHICLES) AVADI

TITLE
BUSH

D S CAT NUMBER

DRAWING NUMBER
327-21

KVD No-66751

SIZE A3

DRAWING NUMBER
352-47

Rz40 (✓)

1. CONTROL GROUP IV TO TT 11.
2. DULL THE SHARP EDGES.
3. COATING : ~~ХИМ. ОКС~~. CHEMICAL OXIDIZING, OIL FINISHING.
4. HARDNESS : HRC 28 – 33.

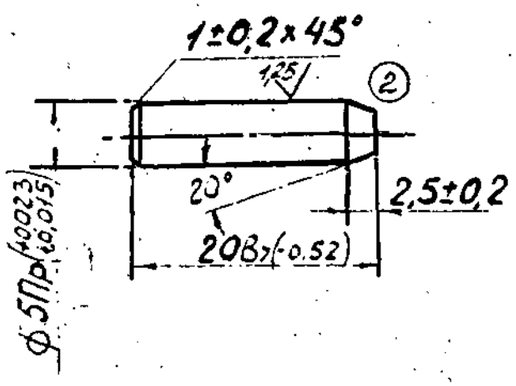

SCALE - 1:1
М 1:1

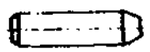

I

1. Группа контроля IV по ТТ 11
2. Острые кромки затупить.
3. Покрытие: Хим. Окс
4. Твердость HRC 28 ÷ 33.

DRG. INTRODUCED BASED ON NOTN. 1677-85 9 -
DRG. INDIANISED BASED ON RUSSIAN ORIGINAL) ISSUE-2 (351-76)

PILOT SAMPLE SHOULD BE APPROVED BY A H S P BEFORE BULK PRODUCTION

EST. WT. 0.0033 Kg.

TO BE STAMPED OR MARKED WHERE INDICATED THUS # (LETTERS)

ALL SHARP EDGES AND CORNERS TO BE REMOVED UNLESS OTHERWISE STATED MACHINED CORNERS TO HAVE R OUT SIDE R INSIDE EQUIVALENT CHAMFERS ARE PERMISSIBLE

ISSUE	DATE	NATURE OF AMENDMENTS

DRN
CHD
TCD
APPD
DATE 16-2-93
SCALE:- 2:1
DIMENSIONS IN mm
TOLERANCE ON DIMNS UNLESS OTHERWISE STATED IS:2102-69
ALL THREADS TO CONFORM TO

MATERIAL:- STEEL 38XA GOST 4543-71

USED ON СБ 20-27-01-4

CONTROLLERATE OF QUALITY ASSURANCE(HEAVY VEHICLES) AVADI

TITLE
CYLINDRICAL PIN

D S CAT NUMBER

DRAWING NUMBER
352-47

SIZE A3

СБ.20.27.01-7

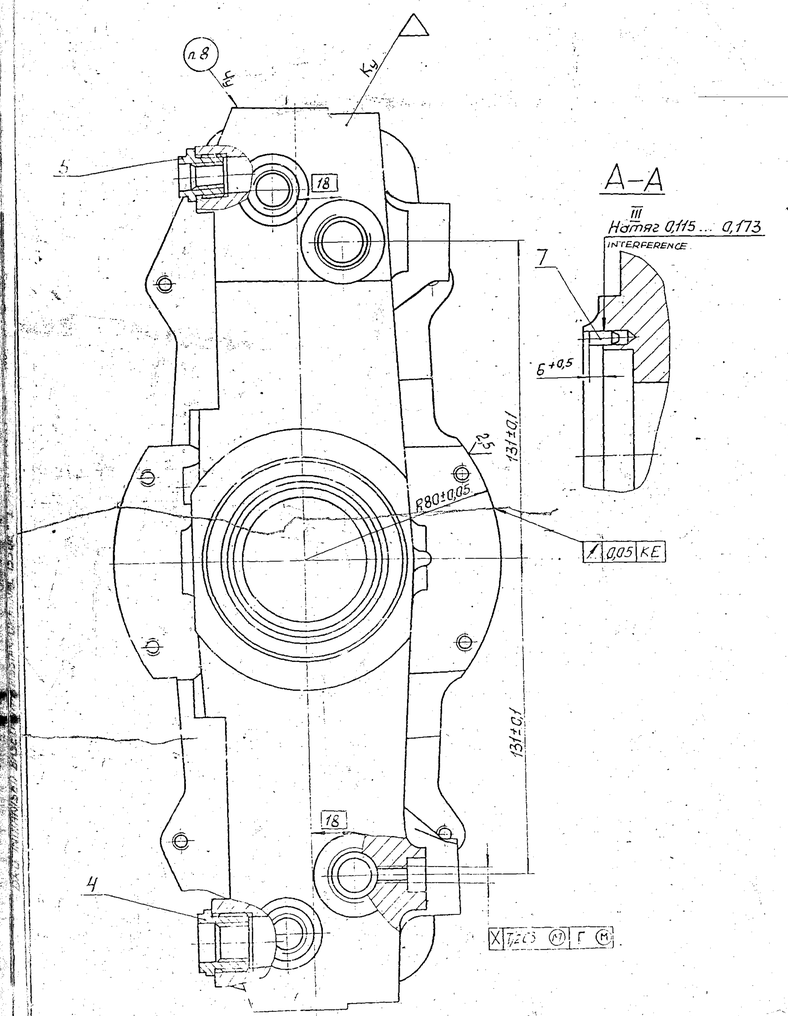

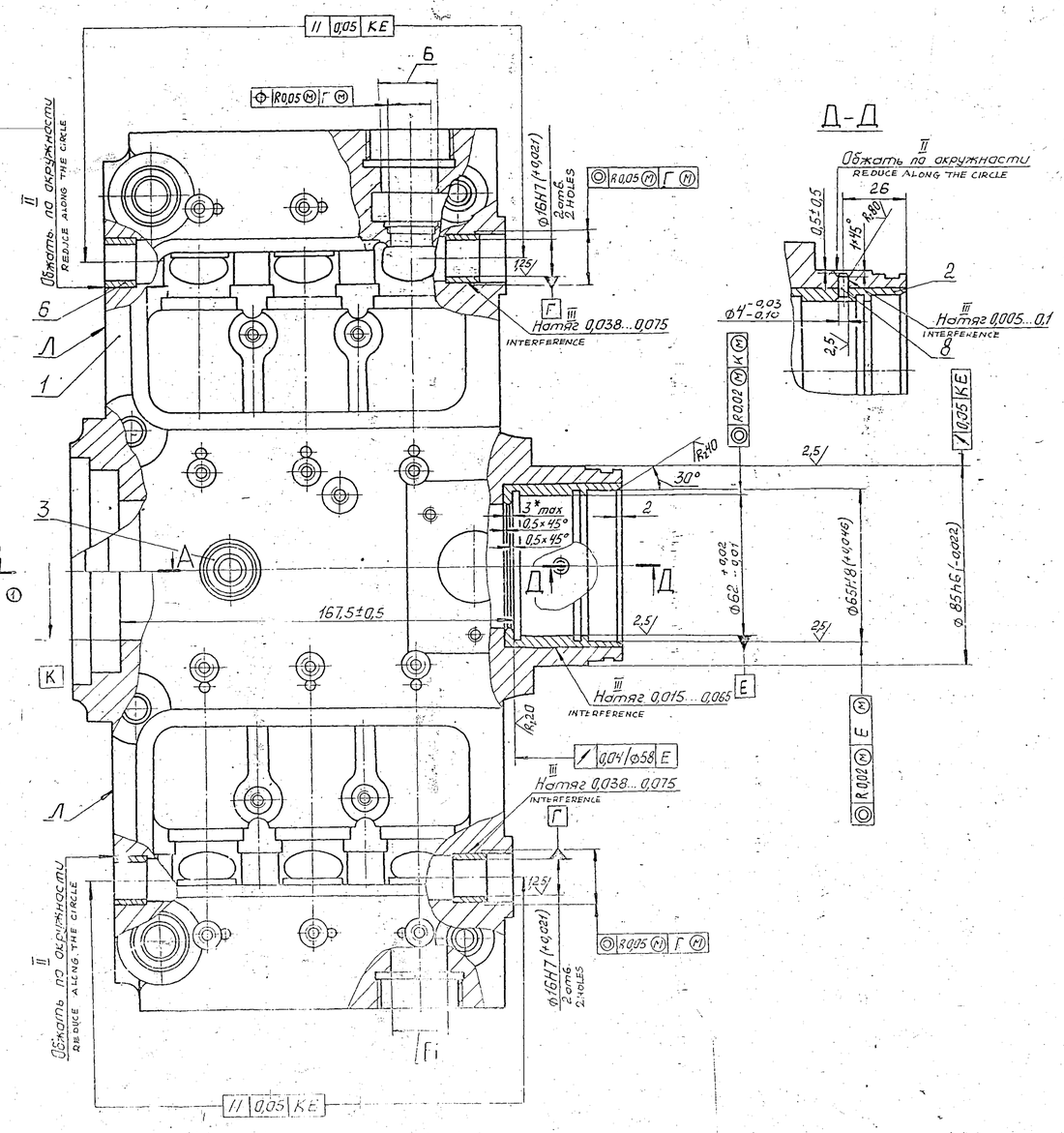

1. Допуск параллельности общей оси отверстия Г относительно плоскости, проходящей через оси крайних отверстий Б, не более 0,05мм на длине корпуса.
2. В развернутых отверстиях Г рейка должна перемещаться плавно.
3. После постановки резьбовых втулок (поз. 3,4,5) внутреннюю резьбу втулок калибровать.
4. Допуск перпендикулярности торцев втулок (поз.3,4,5) к среднему диаметру внутренней резьбы не более 0,05 мм.
Допускается подторцовка на 0,1...0,5 мм.
5. Допуск прямолинейности торца Л по плоскости прилегания сопрягаемой детали не более 0,03 мм.
6. На сопрягающиеся с корпусом насоса торцы втулок (поз. 3, 4, 5) и прилегающие к ним 2...4 нитки резьбы нанести лак 33Ш по инструкции И240-280/75.
7. *Размер для справок.
8. При отправке в запчасти маркировать СБ. 20-27-01-7; шрифт ПО-5, ГОСТ 2930-62.

I. 1. Parallelism allowance of the common axis of Г hole relative to the plane passing through the axes of two extreme Б holes is 0,05 mm max along the body length.
2. The rack should move smoothly in the reamed holes Г without seizings.
3. Calibrate the inner thread of the bushings after the installing of the thread bushings (pos.3,4,5).
4. Squareness allowance of the faces of the bushings (pos.3,4,5) of the inner pitch diameter is 0,05 mm max. It's allowed to face at 0,1...0,5 mm.
5. Straightness allowance of Л face along the adjoining plane of the mating part is 0,03 mm max.
6. Put varnish 33Ш on the faces of the bushings (pos.3,4,5) mating with the pump body and on 2...4 threads of screw adjoining to them according to instruction И 240-280/75.
7. *Reference dimension.
8. Brand СБ.20-27-01-7 on the spares; type ПО -5, GOST 2930-62.

PILOT SAMPLE SHOULD BE APPROVED BY A H S P BEFORE BULK PRODUCTION.

EST. MASS	TO BE STAMPED OR MARKED WHERE INDICATED THUS # LETTERS!
8,695 Kg	

ALL SHARP EDGES AND CORNERS TO BE REMOVED UNLESS OTHERWISE STATED MACHINED CORNERS TO HAVE R. OUTSIDE R INSIDE EQUIVALENT CHAMFERS ARE PERMISSIBLE

ISSUE	DATE	NATURE OF AMENDMENTS

DRN.	Ворошилов	MATERIAL:- —
CHD.		USED ON: СБ.20-27-01-7
TCD		
APPD		CONTROLLERATE OF QUALITY ASSURANCE (HEAVY VEHICLES) AVADI
DATE	15-8-93	
SCALE - 1:1		TITLE: FUEL PUMP BODY
DIMENSIONS IN mm		
TOLERANCE ON DIMNS UNLESS OTHERWISE STATED.		
ALL THREADS CONFORM TO		D S CAT NUMBER
		DRAWING NUMBER СБ.20.27.01-7

USED ON	REF	DRAWING		DESCRIPTION	QTY	
CБ 20-27-05-7		CБ 20-27-01-7		FUEL PUMP BODY		
		& ITEM LIST				
		И 240-280/75		INSTRUCTION FOR PART		
				INSTALLING ON THE		
				SEAL 33 W.		
	1	20-27-20-7		FUEL PUMP BODY	1	
	2	20-27-330-1		SLEEVE	1	
	3	20-27-335-2		BUSHING	1	
	4	20-29-35		BUSHING	2	
	5	20-29-36		BUSHING	2	
	6	327-21		BUSHING	4	
	7	352-47		DOWEL PIN 5 пр × 20	1	
	8	20-52-01		DOWEL PIN 4 × 10	1	

SUPER SEDES CБ 20-27-01-4

I/L CREATED BASED ON RUSSIAN ORIGINAL ISSUE-I NOTIFICATION No. 1677-853

ISSUE	DATE	NATURE OF AMENDMENTS	ISSUE	DATE	NATURE OF AMENDMENTS

DRN	Jalsankar	CONTROLLERATE OF QUALITY ASSURANCE (HEAVY VEHICLES) AVADI.		
CHD		TITLE: FUEL PUMP BODY		
TCD	Jalsankar			
APPD		SHT. No. 1 OF 1	D S CAT NUMBER	ITEM LIST FOR CБ20-27-01-7
DATE	16-2-93