(14C)

IRDE 1077/9 1
FLAT HEAD, RIVET 2·0 X 7·0, IS: 2155 16
(8-RIVETS, TO BE USED ON ASSY. WITH IRDE 1077/SA-1)

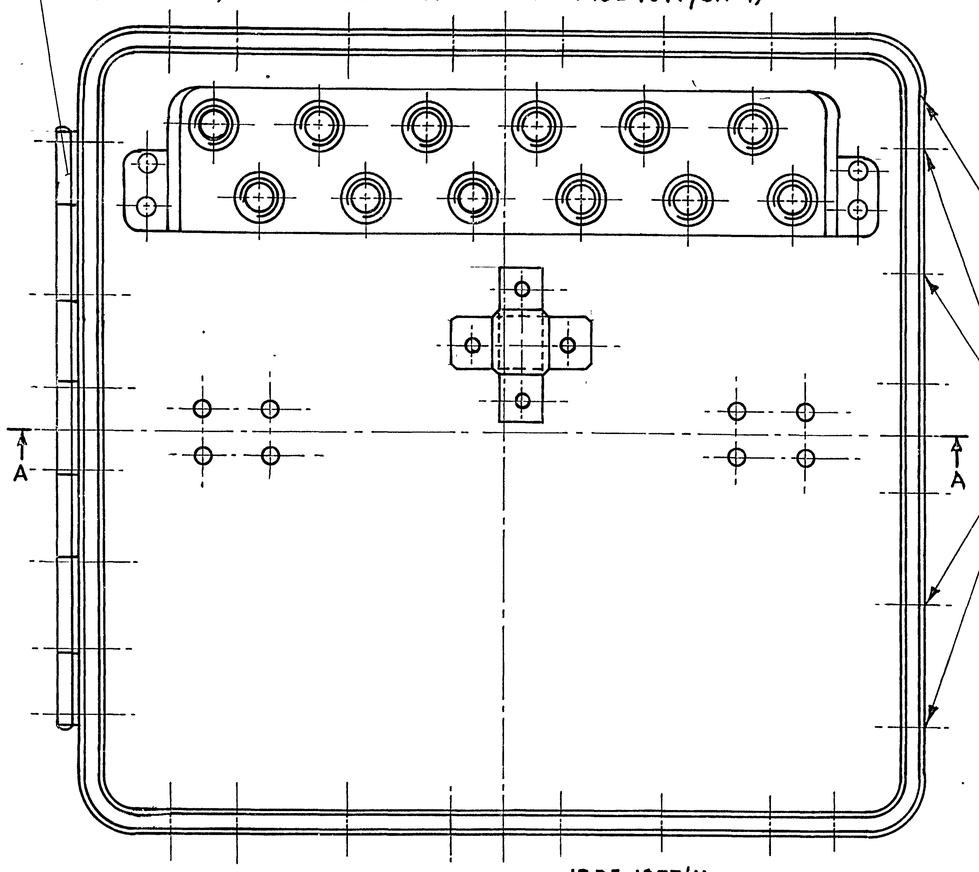

NOTE :-

1. CORNERS AND JOINTS TO BE FILLED IN WITH SOLDER TO ENSURE SEALING.
2. RIVETING TO BE DONE FROM OUTSIDE THE LID KEEPING ALL THE RIVET HEADS INSIDE EXCEPT FOR IRDE 111/15 FOR WHICH RIVETING TO BE DONE INSIDE.

IRDE 1131/1 1

4-HOLES, TO BE LEFT BLANK TO SECURE IRDE 1077/15

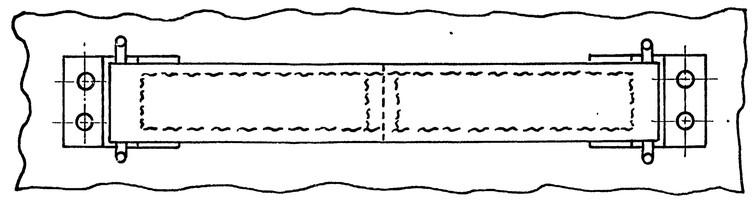

SCRAP VIEW IN DIRECTION OF ARROW 'X'

WEB TO BE STITCHED AS SHOWN
STITCHES TO BE 3 PER CM.

IRDE 1077/11 1
FLAT HEAD, RIVET 2·0 X 5·0, IS: 2155 4

SOFT SOLDERED AFTER RIVETING

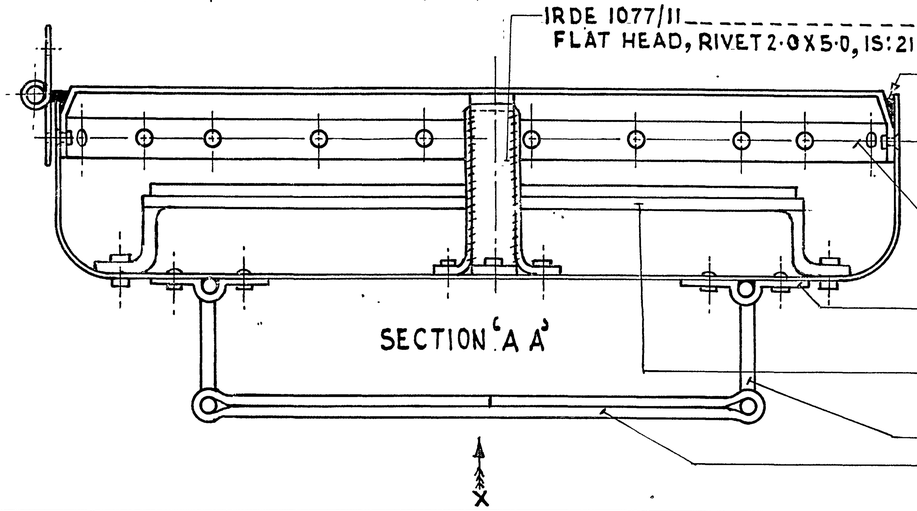

SECTION 'A A'

IRDE 1077/8 1
FLAT HEAD, RIVET 2·0 X 5·0, IS: 2155 22

IRDE 111/15 2
FLAT HEAD, RIVET 2·0 X 5·0, IS: 2155 8

IRDE 1131/2 (3-SHTS.) 1
FLAT HEAD, RIVET 3·0 X 7·0, IS: 2155 4

IRDE 111/16 2

WEB, THICK, 0·G.19 X 270 LG. IS: 6488 (H2/8305-000264) 1

FILING CAB

SYM.	ZONE	AMENDMENTS	CHKD.	SIG.	DATE
		D.C(1):-1034-I(P). DRG. PROV. SEALED.			15.12.80
		D.C.(1):-1676-I(P) (a) NOM. AMENDED & CAT/PT.No ADDED.			9.11.91
		D.C:-6296-I:- DRG SEALED.			2.11/98

D.C(1):-1034-I(P), 1676-I(P), 6296-I

~~LID METAL, CASE CARRYING ASSY.~~ (a)

DISC, VALVE, METALLIC

FOR EXPLANATION OF DIMENSIONING ETC., SEE IRDE NOTE SHEET No 1
THIRD ANGLE PROJECTION
DIMENSIONS ARE IN m.m.

DRN.		APPROVED
TRCD.		FOR DIRECTOR IRDE DEHRADUN
CHKD.		
CHKD		DATE:-20.6.80
USED ON		
BASED ON		
CAT/PT. No.	4820-001532 (a)	
ORG. No	IRDE 1131/SA-1	
SCALE	1:1	SH. OF

MATL & SPECN.
SEE DETAILS

FINISH:-
SEE DETAILS

(1D)

FILING CAB.

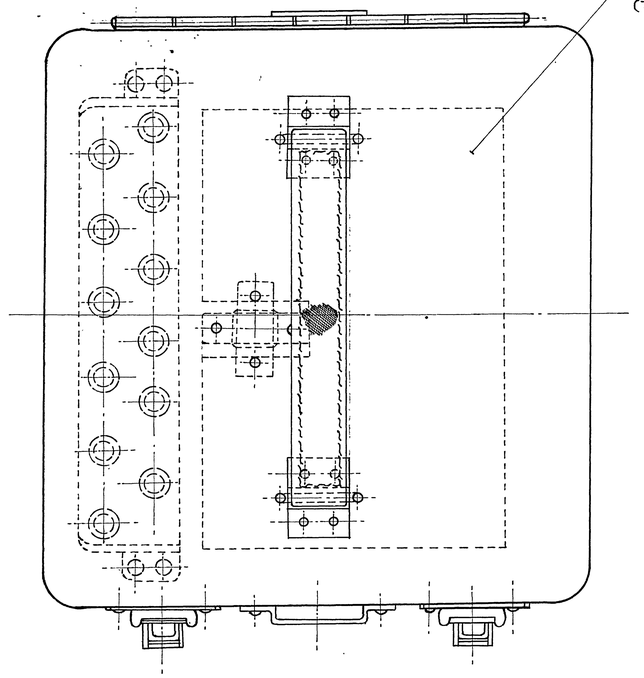

IRDE 1131/3. ——— 1.
(TO BE GLUED WITH SUITABLE ADHESIVE INSIDE THE LID AS SHOWN)

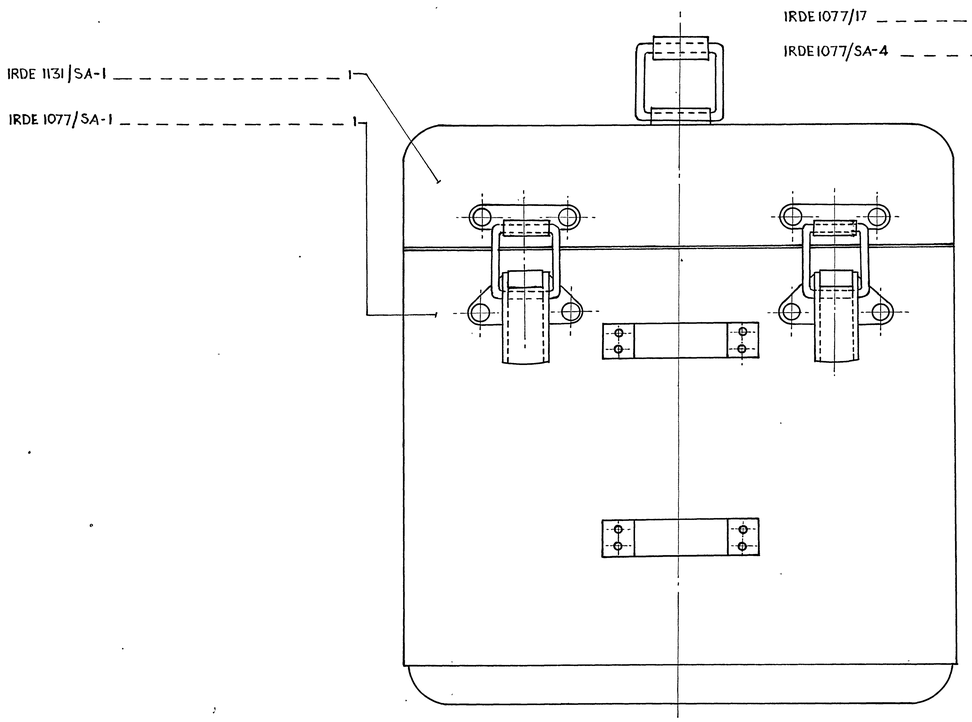

IRDE 1131/SA-1 ——— 1

IRDE 1077/SA-1 ——— 1

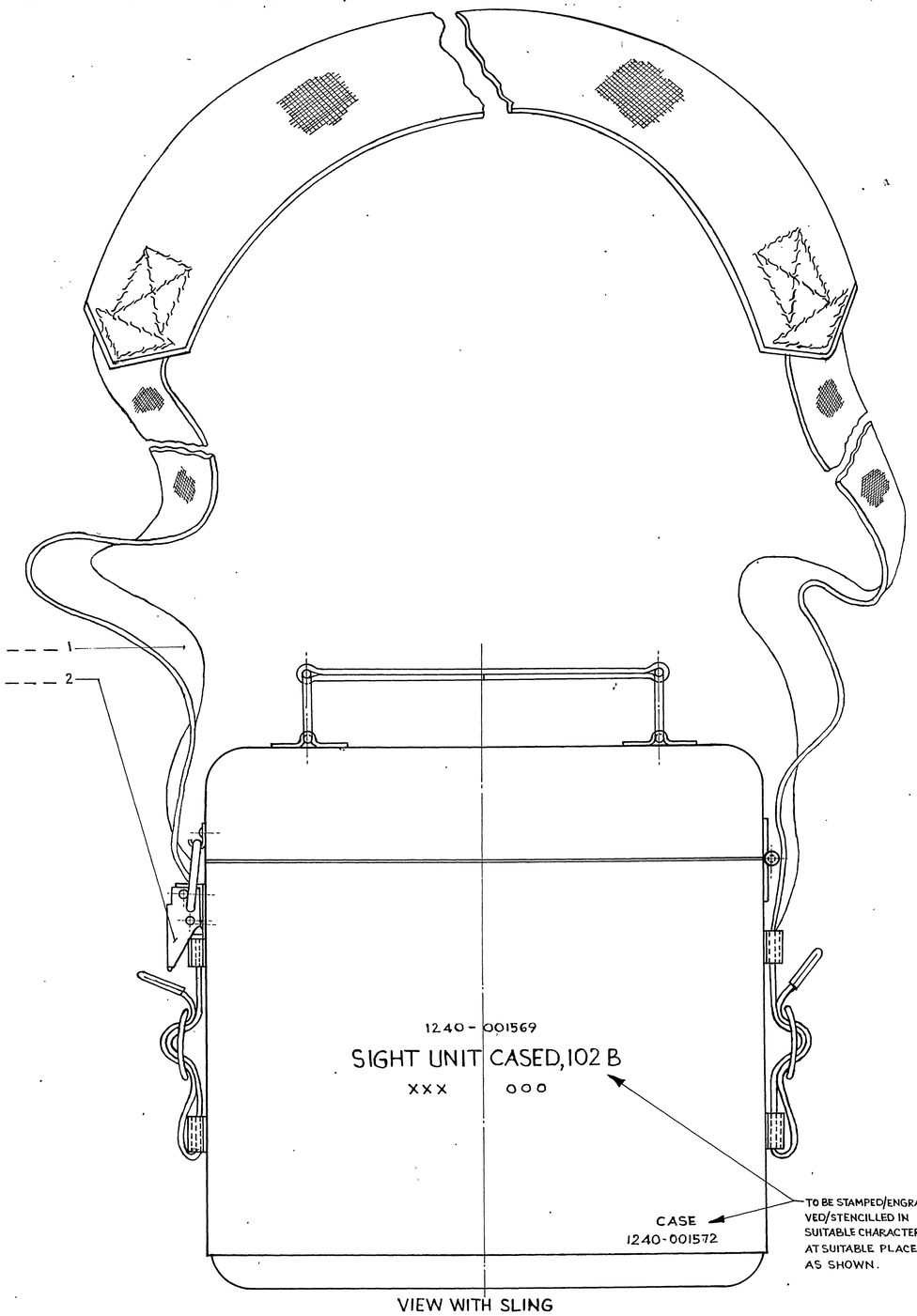

IRDE 1077/17 ——— 1

IRDE 1077/SA-4 ——— 2

TO BE STAMPED/ENGRAVED/STENCILLED IN SUITABLE CHARACTERS AT SUITABLE PLACE AS SHOWN.

VIEW WITH SLING

SYM	No.	AMENDMENTS	CHKD	SIG	DATE
		D.C(I):-1034-I(P). DRG. PROV. SEALED.			16.12.80
		D.C:-6296-I:- DRG. SEALED.			2.11.98

CASE, SIGHT UNIT

FOR EXPLANATION OF DIMENSIONING ETC. SEE IRDE NOTE SHEET No. 1. THIRD ANGLE PROJECTION DIMENSIONS ARE IN MILLIMETERS	DRN	APPROVED
	TRCD	FOR DIRECTOR IRDE, DEHRADUN
	CHKD	
	CHKD	DATE:-
MATL. & SPECN:- SEE DETAILS	USED ON	
	BASED ON	
	CAT/PT. No.	1240-001572
FINISH:- SEE DETAILS	DRG. No.	IRDE 1131
	SCALE	1/1

D.C(I):-1034-I(P), 6296-I.

PREPARED & TRACED AT CII, D. DUN.
PREPARED BY:-
TCD. BY:- Rkupal
CHKD. BY:-
DATE :- 26.12.80.

(158)

FILING CAB

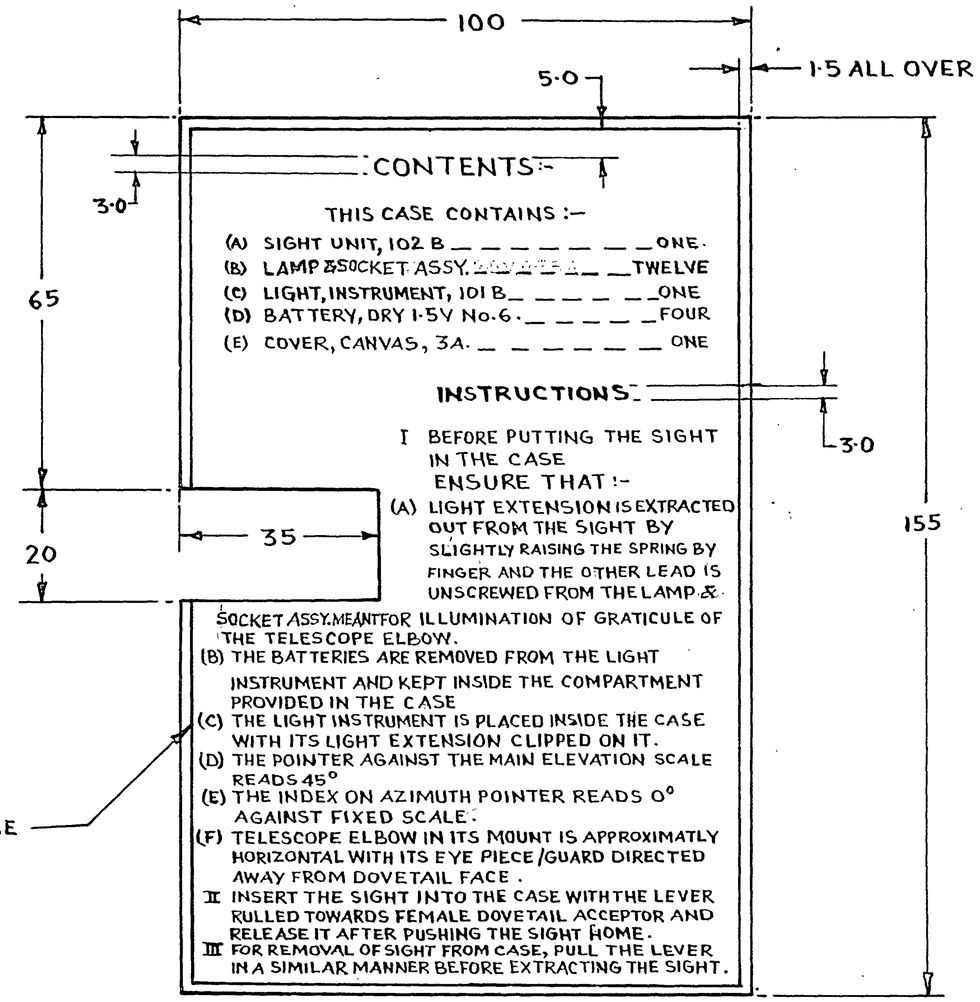

NOTE:-

1. PRINTING OF LABEL TO BE ARRANGED SUITABLY.
2. LARGE CHARACTERS TO BE 2·5 HIGH.
3. SMALL CHARACTERS TO BE 1·5 HIGH. (PRINTING MAY BE DONE EITHER IN CAPITAL OR IN SMALL LETTERS.)

LABEL (a)

SYM	ZONE	AMENDMENTS	CHD	SIG	DATE
		D.C.(I):-1034-I(P). DRG. PROV. SEALED.			16.12.80
	(a)	D.C.(I):-1676-I(P) NOMS. AMENDED & CAT/PT. No. ADDED			9.11.91
		D.C.:- 6296-I:- DRG. SEALED.			2 11/98

FOR EXPLANATION OF DIMENSIONING ETC. SEE IRDE NOTE SHEET No. 1 THIRD ANGLE PROJECTION DIMENSIONS ARE IN MILLIMETRES

DRN		APPROVED
TRCD		FOR DIRECTOR
CHD		IRDE DEHRADUN
CHD		DATE:-

MATL. & SPECN.
GOOD QUALITY COMMERCIAL PRINTING PAPER

USED ON	
BASED ON	
CAT/PT. No.	8315-000360 (a)

FINISH :-

DRG. No.	IRDE 1131/3	
SCALE	1/1	SHT OF

D.C.(I):-1034-I(P), 1676-I(P), 6296-I.

PREPARED & TRACED AT CIL, D. DUN
PREP. BY:- TCD. BY:- B. Nepal
CHD. BY:- DATE:- 15.12.80.

158

D.C(I):-1034-I(P);1676-I(P); 6296-I

FILING CAB

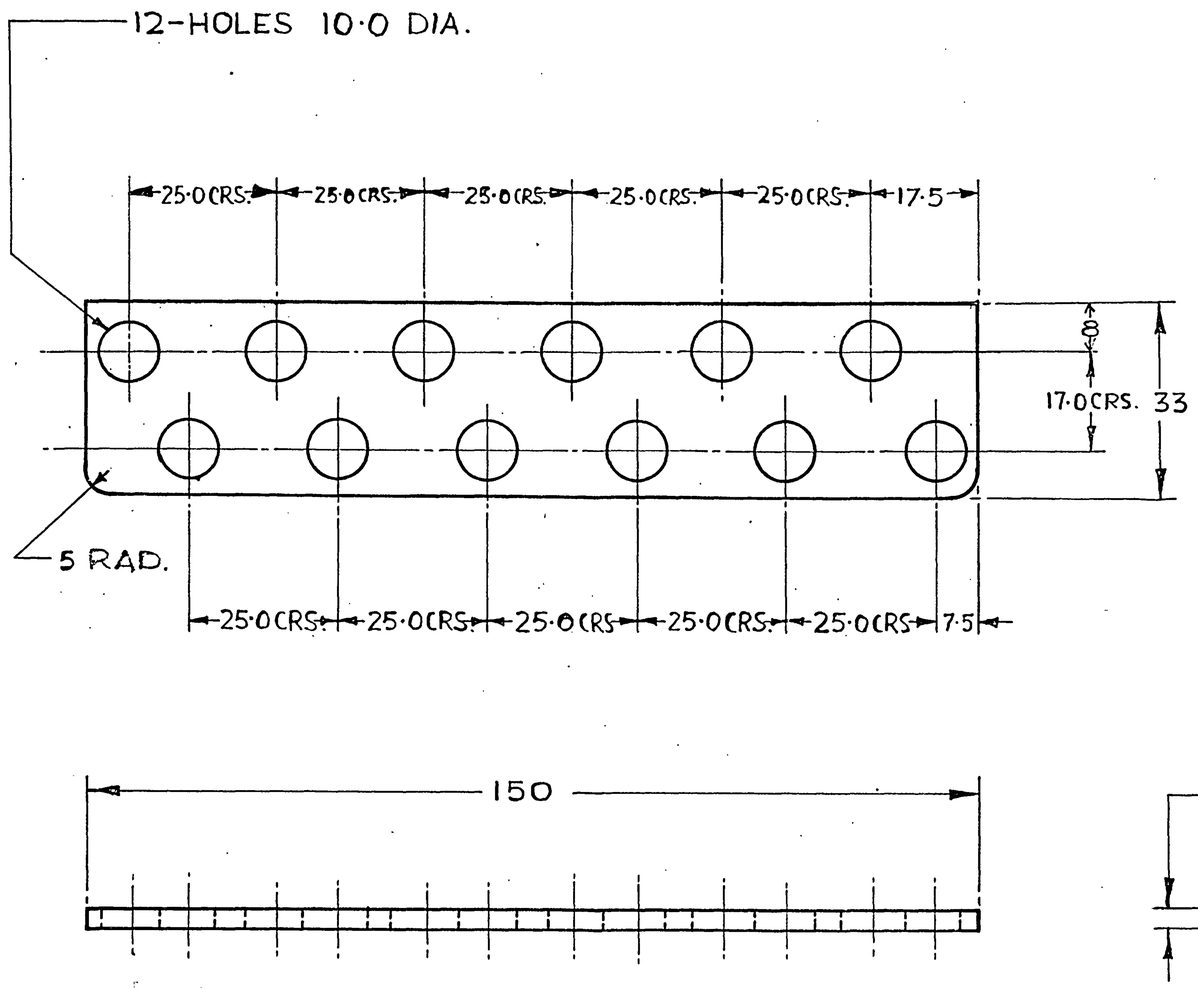

SYM	ZONE	AMENDMENTS	CHKD	SIG	DATE
		D.C.(I):- 1034-I(P):- DRG. PROV. SEALED.			16.12.80
		D.C.(I):- 1676-I (P) (a) NOM. AMENDED & CAT/PT.No. ADDED			9.11.91
		D.C:- 6296-I.- DRG. SEALED.			2-11-98

FOR EXPLANATION OF DIMENSIONING ETC; SEE IRDE NOTE SHEET No. 1 THIRD ANGLE PROJECTION. DIMENSIONS ARE IN MILLIMETRES

DRN		APPROVED for DIRECTOR IRDE, Dehra Dun
TRCD		
CHKD		
CHKD		DATE 01 Sep 79

MATL. & SPECN

SHEET RUBBER SYNTHETIC OIL RESISTANT IND/TC 2437

USED ON	
BASED ON	
CAT PT. No.	6250-000537 (a)

FINISH.— CLEAN

DRG. No.	IRDE 1131/2
SCALE	1:1
3 SHT - OF 3	

PAD

HOLDER (I), ~~BUI P~~ LAMP HOLDER FLAT (a)

(d) MATL. & SPEC:- STEEL Gde- ISH410S TO IS:5986-2017.

FILING CAB

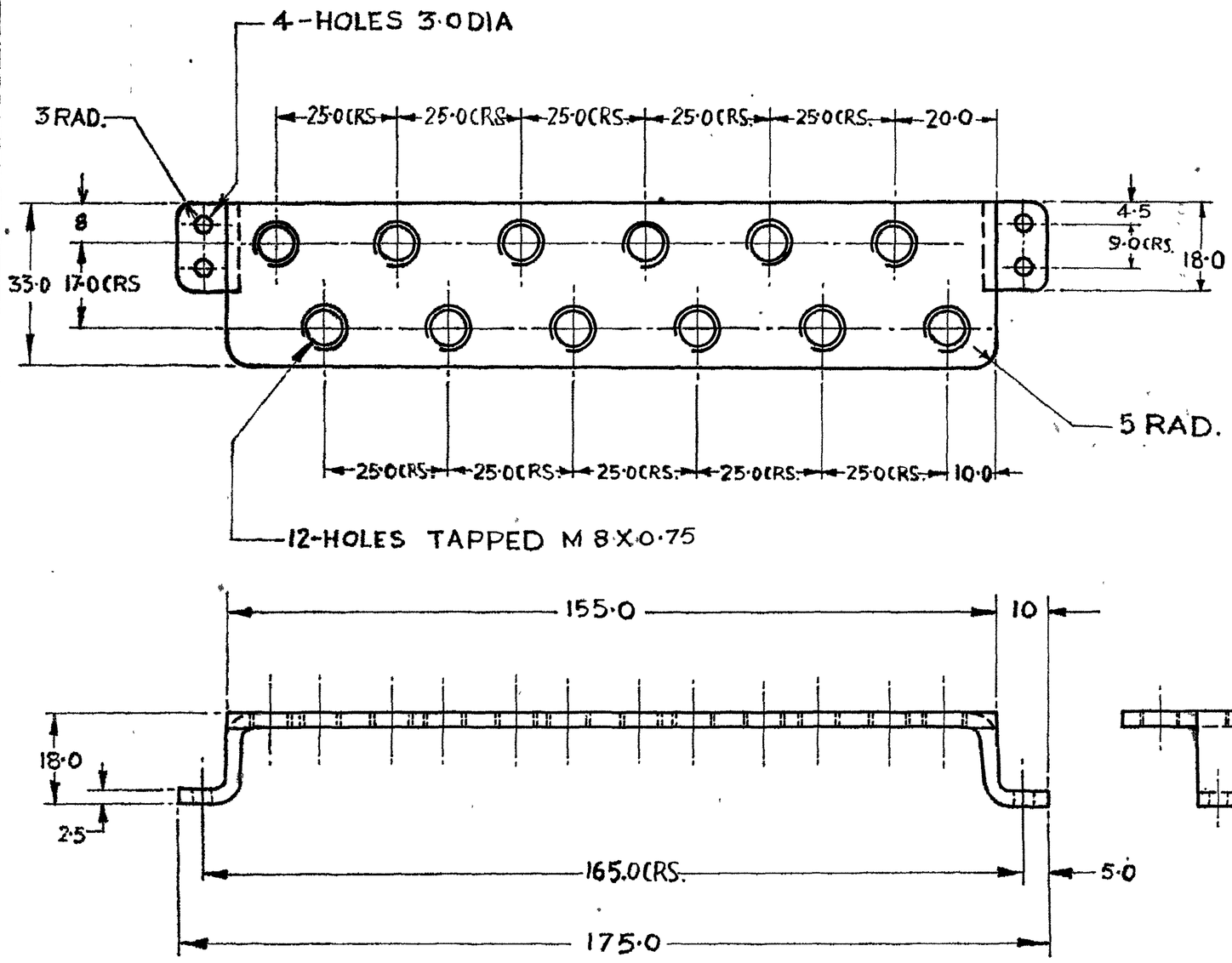

SYM	ZONE	AMENDMENTS	CHKD	SIG	DATE
		D.C.(1):-1034-I(P):- DRG. PROV. SEALED.			16.12.80
		D.C.(1):-1676-I(P) (a) NOMS. AMENDED & CAT/PT. No. ADDED			9.11.91
		(b) D.C:-2120-I(P). NOTE, MATL., & FINISH AMENDED.			26.8.98
		D.C:- 6296-I:- DRG. SEALED.			2 11/98
		(c) DC: 7136-I. MATL. AMENDED.			17 1/17
		(d) DC: 7205-I. MATL. AMENDED.			23 2/18
	(e)	D.C:-7224-I FINISH. AMENDED			16-4/19

FINISH:- (b) (e)
TO BE PAINTED APPLY PRIMER TO IS:2075-2017 & PAINTED TO IS:8983-1978 (ISC-294 OF IS:5-2007) EXCEPT BEARING SURFACES AFTER ASSEMBLY.

NOTE:- (b)
TO BE PHOSPHATED CLASS A2 TO IS:3618-1986

HOLDER

FOR EXPLANATION OF DIMENSIONING ETC: SEE IRDE NOTE SHEET No. 1
THIRD ANGLE PROJECTION.
DIMENSIONS ARE IN MILLIMETRES

DRN		APPROVED for DIRECTOR IRDE, Dehra Dun
TRCD		
CHKD		
CHKD		DATE 6/Sep 79
USED ON		
BASED ON		
CAT PT No.	6250-000537 (a)	
DRG. No.	IRDE 1131/2	
SCALE	1:1	SHT 2 OF 3

MATL. & SPECN (b) (d) (c) ~~STEEL Gde 955 TO IS: 5986-2017~~ ~~STEEL, IS:1079/Gr. 42-1079~~ ~~STEEL Fe 410 TO IS:1079-1988~~ AS ON DRG.

FINISH – SEE ABOVE ~~TO BE PAINTED WITH LATEST APPROVED SERVICE COLOUR EXCEPT BEARING SURFACES AFTER ASSY~~

HOLDER (1), ~~BULB~~ LAMP HOLDER FLAT (a)

(ISB)

D.C.(1):-1034-I(P), 1676-I(P), 2120-I(P), 296- , 7136-I, 7205-I, 7224-I,

(158)

FILING CAB

SYM	ZONE	AMENDMENTS	CHKD	SIG	DATE
		D.C.(I):- 1034-I(P):- DRG. PROV. SEALED.			16.12.80.
		D.C.(I):-1676-I(P) (a) NOM:. AMEDED & CAT/PT. Nos ADDED			9.11.91
		D.C:- 6296-I:- DRG. SEALED.			2.11.98

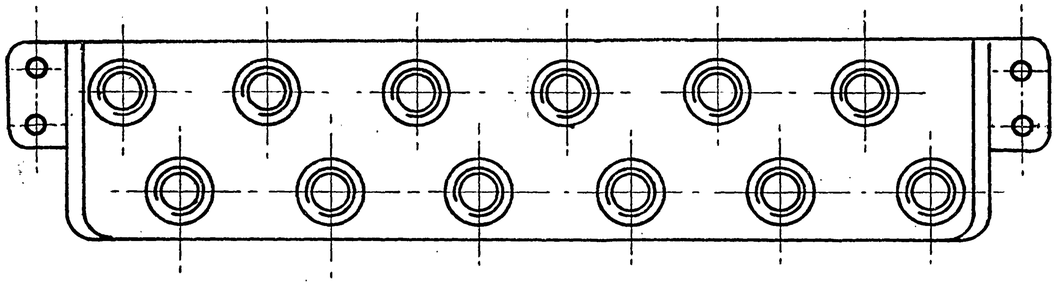

IRDE 1131/2 (SHT. 2) ———————— 1

IRDE 1131/2 (SHT. 3) ———————— 1
(TO BE GLUED WITH SUITABLE ADHESIVE IN POSITION AS SHOWN)

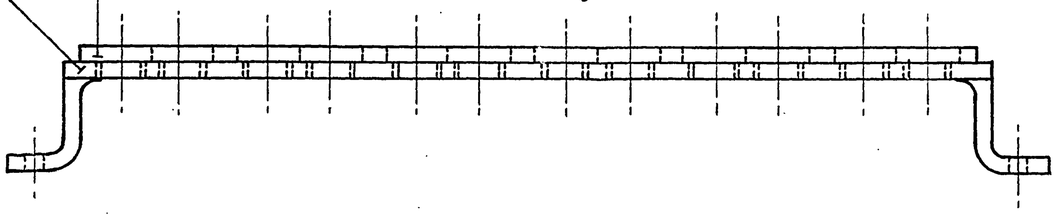

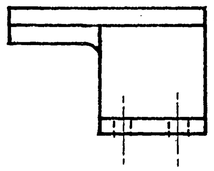

D.C(I):-1034-I(P),1676-I(P),6296-I.

HOLDER(I), ~~BULB~~ LAMP HOLDER FLAT. (a)

FOR EXPLANATION OF DIMENSIONING ETC; SEE IRDE NOTE SHEET No. 1 THIRD ANGLE PROJECTION. DIMENSIONS ARE IN MILLIMETRES

DRN		APPROVED
TRCD		FOR DIRECTOR
CHKD		IRDE, Dehra Dun
CHKD		DATE 01.2.79

MATL. & SPECN: AS ON DRAWING

FINISH.— AS ON DRAWING

USED ON	
BASED ON	
CAT PT. No.	6250-000537 (a)
DRG. No.	IRDE 1131/2
SCALE	1:1 — SHT 1 OF 3

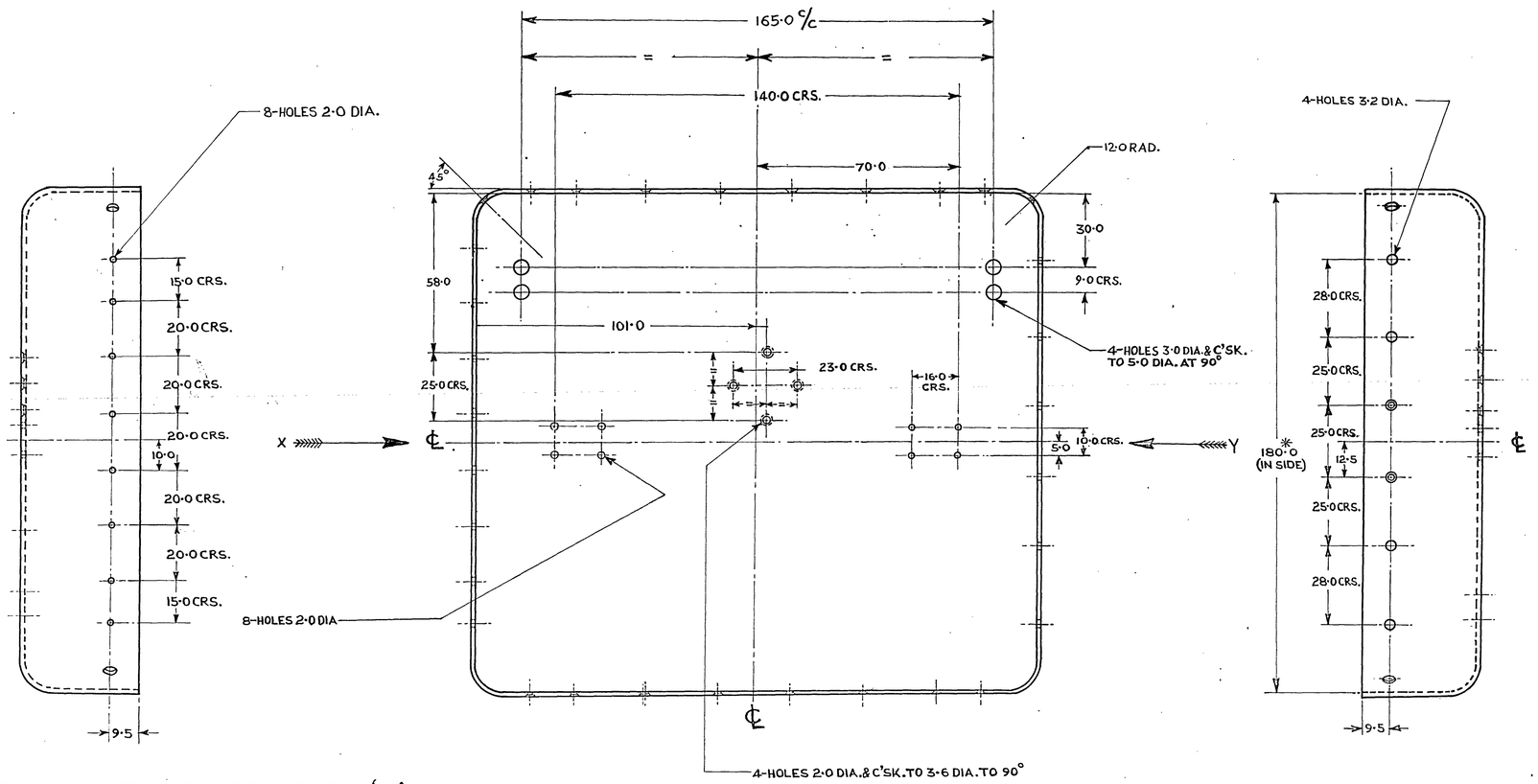

VIEW IN DIRECTION OF ARROW 'X'

VIEW IN DIRECTION OF ARROW 'Y'

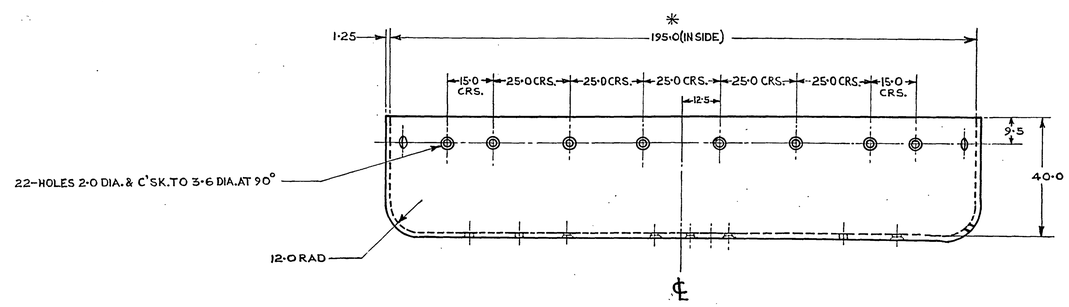

NOTE:- (b)

1. TO BE PHOSPHATED CLASS A2 TO IS:3618-1966
2. DIMENSIONS MARKED WITH ASTERIC TO SUIT IRDE 1077/8

FINISH:- (b) (d)

INSIDE & OUTSIDE TO BE PAINTED APPLY PRIMER TO IS:2075-2017 & PAINTED TO IS:8985-1978 (ISC-294 OF IS:5-2007) EXCEPT BEARING SURFACES AFTER ASSEMBLY.

SYM.	ZONE	AMENDMENTS.	CHKD	SIG.	DATE
		D.C.(I):-1034-I(P). DRG. PROV. SEALED.			16.12.80
		D.C.(I):-1676-I(P) (a) CAT/PT. No. 1240-002247 ADDED			9.11.91
		(b) D.C:-2120-I(P). NOTE, MATL. & FINISH AMENDED			26.8.92
		D.C:-6296-I.- DRG. SEALED.			2.11/98
		(c) D.C:-7136-I. MATL AMENDED			17.1/17
		(d) D.C:-7205-I MATL. AMENDED			23.7/18
		(e) D.C:-7224-I FINISH AMENDED			16.5/19

FILING CAB

FOR EXPLANATION OF DIMENSIONING ETC., SEE IRDE NOTE SHEET No. I
THIRD ANGLE PROJECTION
DIMENSIONS ARE IN MILLIMETER

(d) MATL. & SPECN:-
STEEL GRADE-ISH410S TO IS:5986-2017

FINISH:-
SEE ABOVE

DRN.		APPROVED
TRCD.		FOR DIRECTOR IRDE DEHRADUN
CHKD.		
CHKD.		DATE:-19.4.75
USED ON		
BASED ON		
CAT./PT. No.	1240-002247 (a)	
DRG. No.	IRDE 1131/1	
SCALE	1/1	SHT. OF

LID METAL, CASE CARRYING

PREPARED & TRACED AT CII. DEHRADUN.
PREPARED BY:-
TRACED BY:- Vijay
CHECKED BY:-
DATE:- 30.12.80

D.C.(I):-1034-I(P), 1676-I(P), 2120-I(P), 6296-I, 7136-I, D.C:-7205-I, 7224-I,

(5G)

FOR EXPLANATION OF DIMENSIONING ETC, SEE CQA(I)GUIDE No.001-1992
THIRD ANGLE PROJECTION DIMENSIONS ARE IN MILLIMETRES.

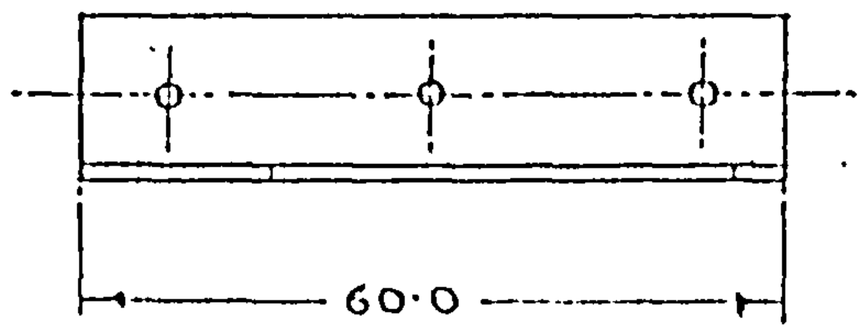

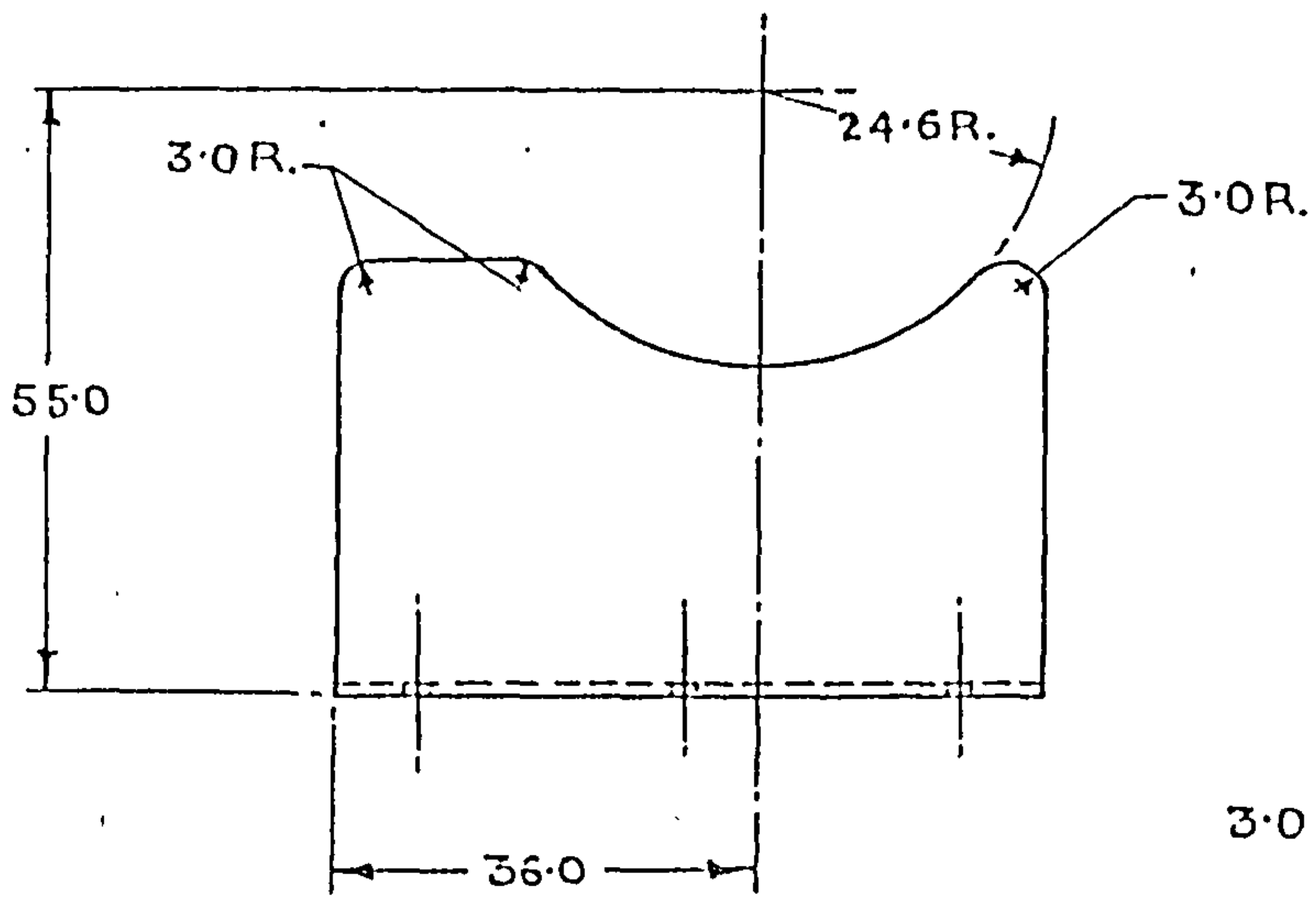

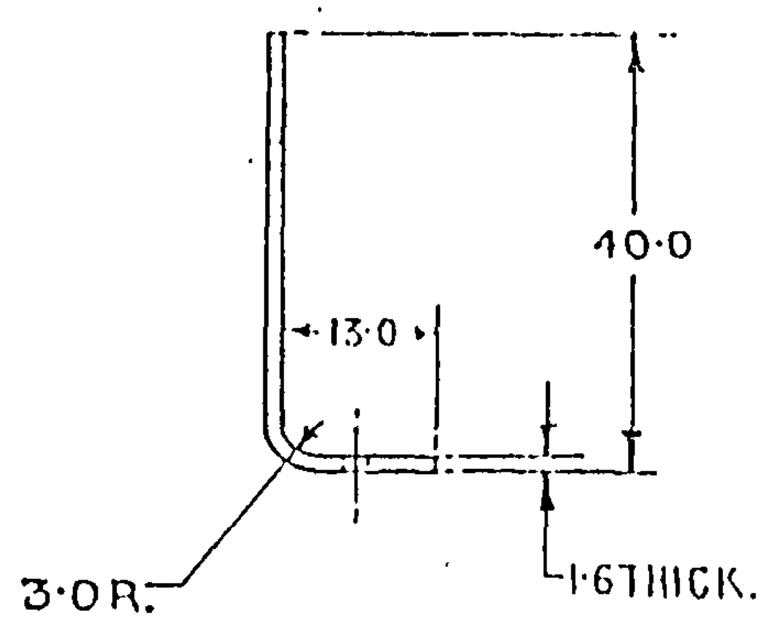

NOTE:-
FOR HOLES SEE IRDE 1077/18(SHT.1)

SYM	AMENDMENTS	CHKD	SIG	DATE
	(c) DC: 7205-I. MATL. AMENDED.			23/7/18
	(b) DC: 7136-I. MATL. AMENDED			17-1-17
	D.C.:-6386-I:- "OBSOLESCENT" CANCELLED.			23.6.99
	D.C:-6303-I:- DRG. ENDORSED "OBSOLESCENT"			16.11.98
	(a) D.C.(I):-5519-1. CAT/PT. No. ADDED.			16.11.91
	D.C.(I):-3349-I. DRG. SEALED.			16.6.76

MATD& SPECN	STEEL, Gde-ISH 330S (OR) Gde-ISH 410S (b) (c) TO IS: 5986-2017.
FINISH	TO BE CLEAN
TITLE	SUPPORT

SUPPORT REAR

DRN.		APPROVED FOR DIRECTOR IRDE, DEHRA DUN
TRCD.		
CHKD.		
CHKD.		DATE: 9.12.75
USED ON.		
BASED ON.		
CAT/ PT. No.	5340-007900 (a)	
DRG. No.	IRDE 1077/18	
SCALE	1/1	SHT-4 OF 4.

VETTED BY: I/C QM

POLYESTER NEGATIVE PREPARED AT CQA(I)D.DUN
PREPARED BY:
CHECKED BY:-
DATE:-

D.C.(I):- 3349-I, 5519-I, 6303-I, 6386-I, 7136-I, 7205-I.

FOR EXPLANATION OF DIMENSIONING Etc., SEE CQA(I)GUIDE No.001-1992
THIRD ANGLE PROJECTION DIMENSIONS ARE IN MILLIMETRES.

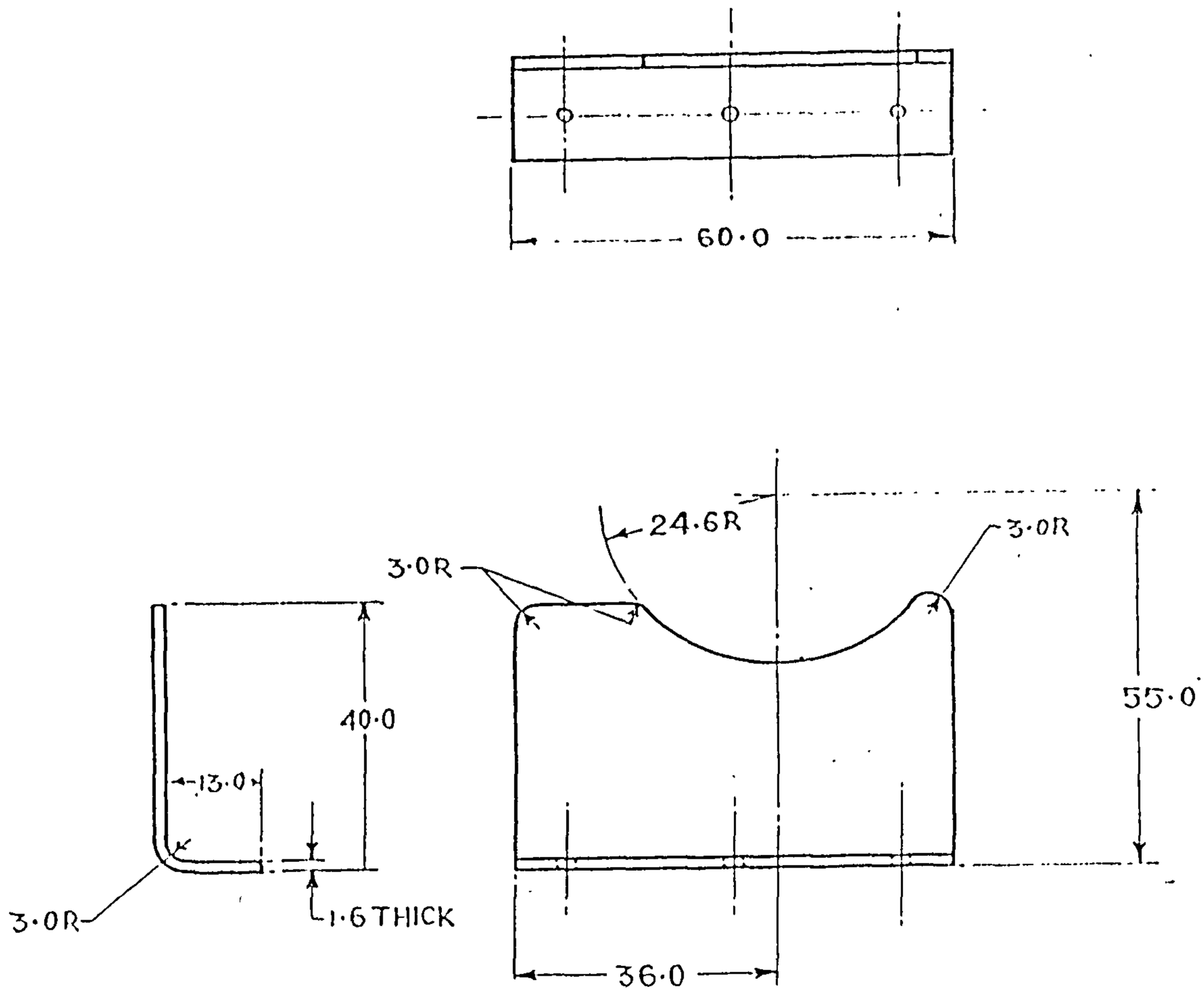

NOTE :-
FOR HOLES SEE IRDE 1077/18 (SHT.1)

SYM	AMENDMENTS	CHKD	SIG	DATE
	(c) DC: 7205-I. MATL. AMENDED.			23 7/18
	(b) DC: 7136-I. MATL. AMENDED.			17 5/17
	D.C:- 6386-I:- "OBSOLESCENT" CANCELLED.			23 6/99
	D.C:-6303-I:- DRG. ENDORSED "OBSOLESCENT."			16.11.98
	(a) D.C.(1):-5519-I. CAT/PT. No. ADDED.			16.11.91
	D.C.(1):-3349-I: DRG SEALED.			16.6.76

D.C.(1):-3349-I, 5519-I, 6303-I, 6386-I, 7136-I, 7205-I.

VETTED BY:
C I/C QM.....

DATE:-

DRAWN AT CQA(I)D.DUN

MATL & SPECN	STEEL, Gde-ISH330S (OR) Gde-ISH410S TO IS:5986-2017 (c) (b)
FINISH	TO BE CLEAN!
TITLE	SUPPORT

SUPRORT FRONT

DRN		APPROVED for DIRECTOR IRDE, DEHRADUN
TRCD		
CHKD		
CHKD		Date: 9.12.75
USED ON		
BASED ON		
CAT / PT.No.	5340-007900 (a)	
DRG. No.	IRDE 1077/18	
SCALE	1/1	SHT-3 OF 4

(5G)

FOR EXPLANATION OF DIMENSIONING Etc., SEE CQA(I)GUIDE No.001-1992

THIRD ANGLE PROJECTION — DIMENSIONS ARE IN MILLIMETRES.

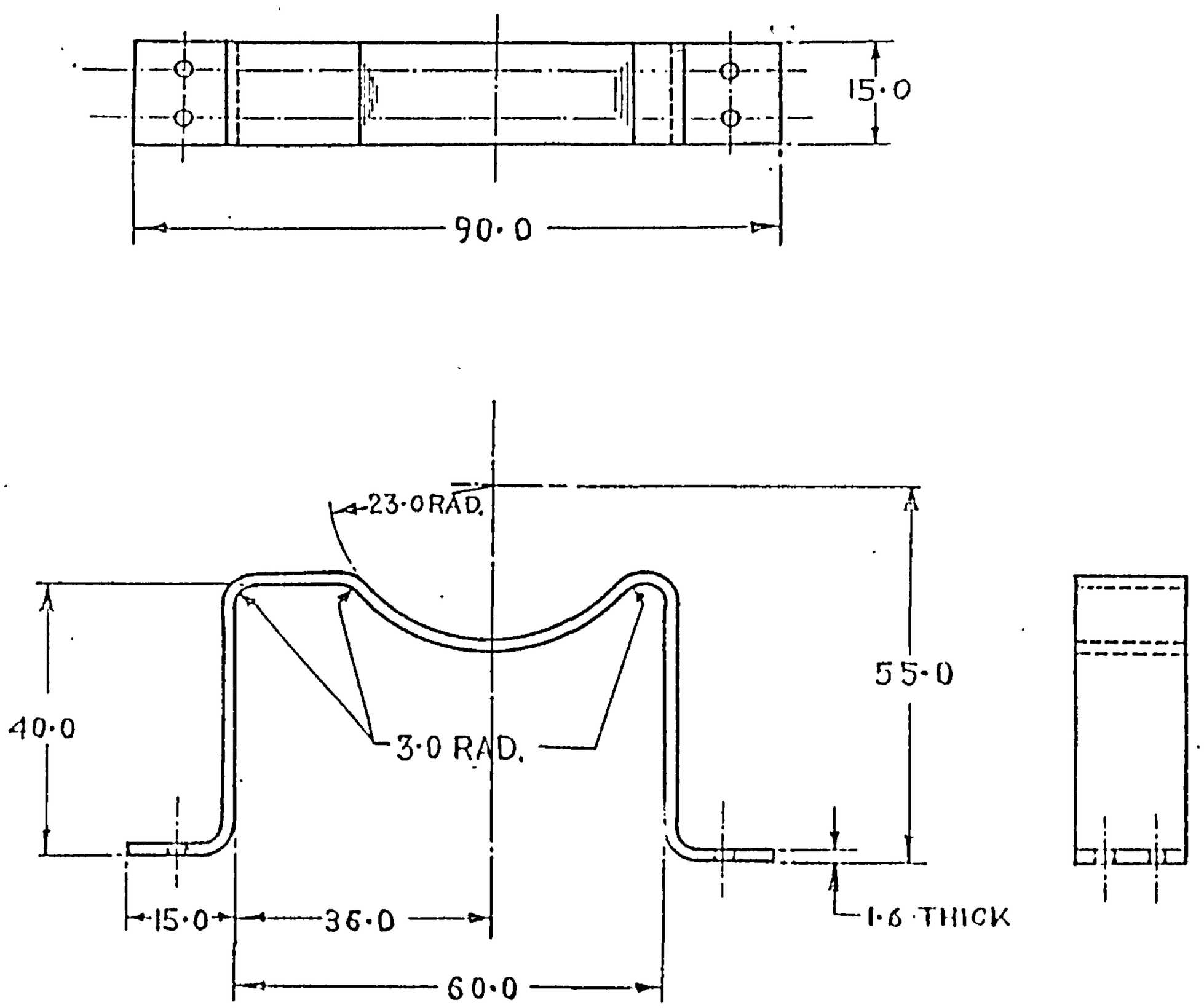

SYM	AMENDMENTS	CHKD	SIG	DATE
(c)	DC: 7205-I. MATL. AMENDED.			23 7/18
(b)	DC: 7136-I. MATL AMENDED			17 1/17
	D.C:- 6386-I:- "OBSOLESCENT" CANCELLED			23 6/77
	D.C:- 6303-I:- DRG. ENDORSED "OBSOLESCENT"			16.11.92
(a)	D.C.(I):- 5519-I. CAT/PT. No. ADDED.			16.11.91
	D.C.(I):- 3349-I:- DRG. SEALED.			16.6.76

SUPPORT TOP

DRN		APPROVED for DIRECTOR IRDE, DEHRADUN Date: 9.12.75
TRCD		
CHKD		
CHKD		
USED ON		
BASED ON		
CAT / PT.No.	5340-007900 (a)	
DRG. No.	IRDE 1077/18	
SCALE	1/1 SHT-2 OF-4	

MATL & SPECN: STEEL Gde-ISH 3305 (OR) Gde-ISH4105 TO IS:5986-2017. (b) (c)

FINISH: TO BE CLEAN

TITLE: SUPPORT

D. C. (I):- 3349-I, 5519-I, 6303-I. 6386-I, 7136-I, 7205-I.

VETTED BY: O I/C QM

POLYSTER NEGATIVE PREPARED AT CQA(I)D.DUN

PREPARED BY:

CHECKED BY:

DATE:

(56)

FOR EXPLANATION OF DIMENSIONING Etc. SEE CQA(I)GUIDE NNo.001-1992
THIRD ANGLE PROJECTION DIMENSIONS ARE IN MILLIMETRES.

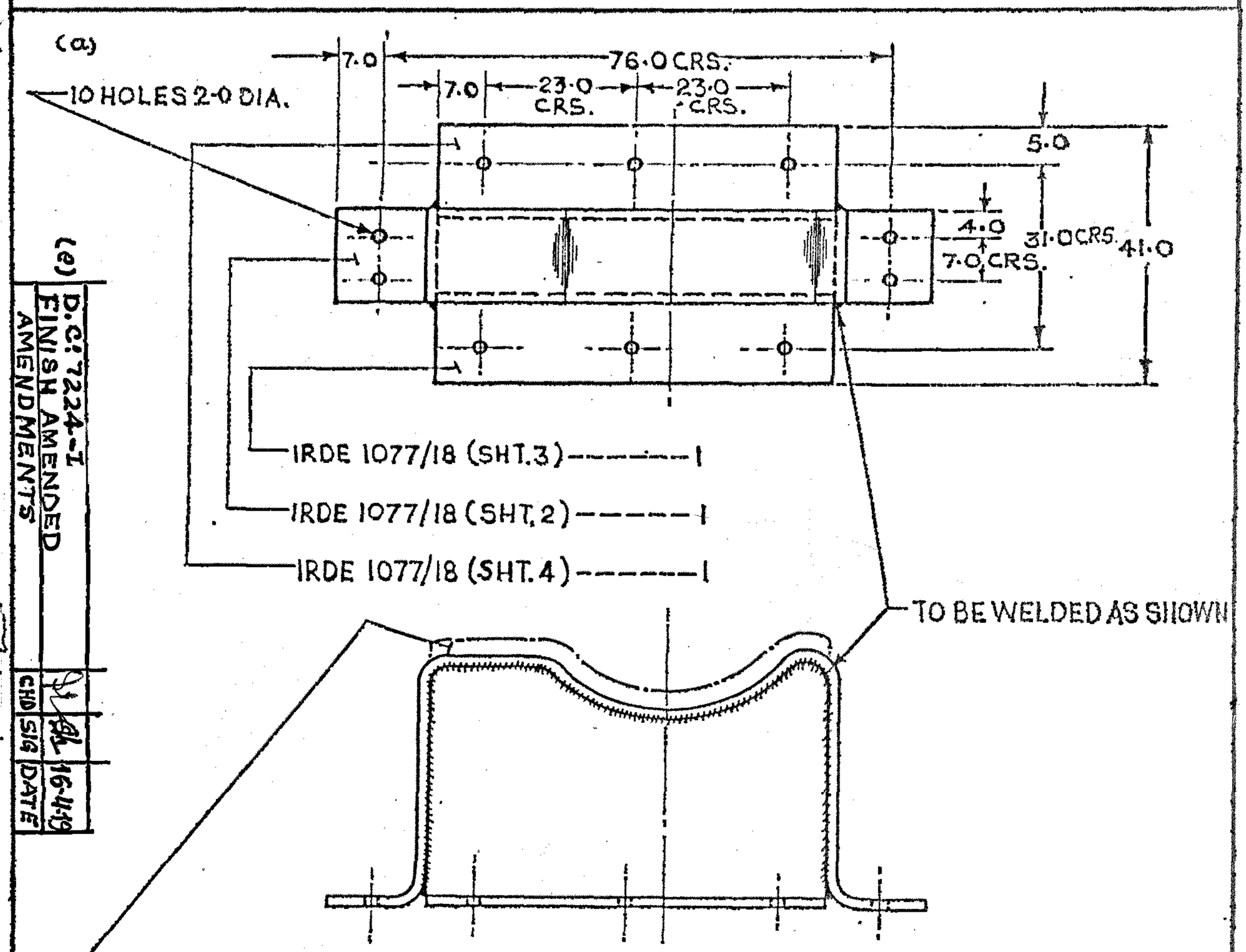

SYM	AMENDMENTS	CHD	SIG	DATE
(e)	D.C:- 7224-I FINISH AMENDED			16-11-99

FINISH:-APPLY PRIMER TO IS:2075-2017 AND PAINTED OF
(e) IS:8983-1978(ISC NO-294 OF IS:5-2007)
EXCEPT BEARING SURFACES.

NOTE:- TO BE PHOSPHATED CLASS'B'
OF IS:3618-1966 BEFORE PAINTING.

	D.C:- 6386-I:- "OBSOLESCENT" CANCELLED.			23.6.99	DRN		APPROVED for DIRECTOR IRDE. DEHRA DUN. Date: 9.12.75
	D.C:-6303-I:- DRG. ENDORSED "OBSOLESCENT."			16.11.98	TRCD		
	(b) D.C.(1):- 5519-I. CAT/PT. No. ADDED.			16.11.91	CHKD		
(a)	D.C.(1)-3379-I:-10-HOLES 2·0 DIA. WERE 1·6 DIA.			12.7.76	CHKD		
	D.C.(1):-3349-I:- DRG. SEALED.			16.6.76	USED ON		
SYM	AMENDMENTS	CHKD	SIG	DATE	BASED ON		
MATL & SPECN	AS ON DRG.				CAT/ PT. No.	5340-007900 (b)	
FINISH	AS ON DRG						
TITLE	SUPPORT				DRG. No.	IRDE 1077/18	
					SCALE	1/1	SHT.-1 OF 4

D.C.(1):-3349-I, 3379-I, 5519-I. POLYESTER NEGATIVE PREPARED AT CQA(I)D-DUN VETTED BY
6303-I, 6386-I, 7224-I. PREPARED BY: I/C QM
CHECKED BY: DATE:-

D.C.(I):-0872-I(P),0883-I(P),3349-I,3585-I,
4643-I,6159-I,6300-I,6303-I.

VETTED BY :
& I/C QH.

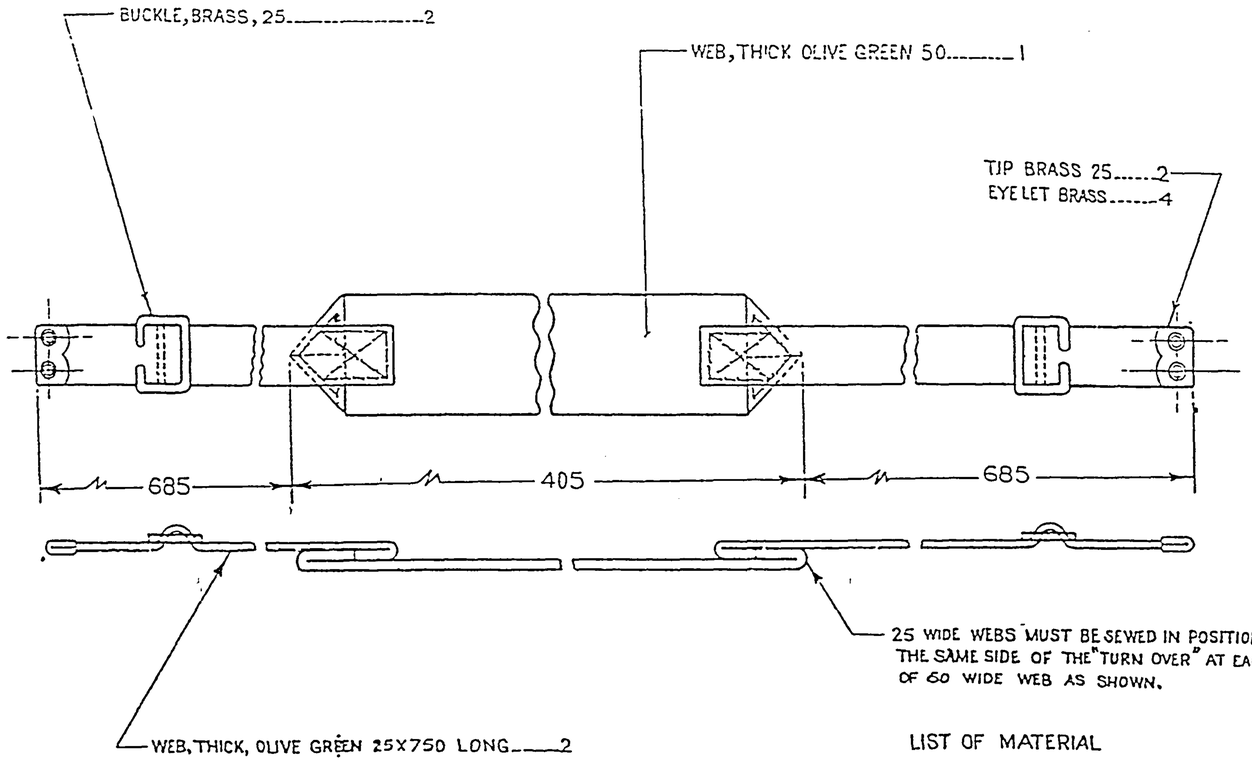

LIST OF MATERIAL

CAT/ PART No	NOMENCLATURE	SPECIFICATION
H-2/8305-000265	WEB, THICK, OLIVE GREEN 25MM	IS:6488 - (b)
H-2/8305-000268	WEB, THICK, OLIVE GREEN 51 MM.	IS:6488 -
M3/8315-000035	BUCKLE BRASS QUICK RELEASE 25MM	INO/G:/468 (LATEST) (a)
CN/8315-000061	TIP BRASS 25 MM	" "
CN/8315-000048	EYELET BRASS	" "
CA/8310-000064	SEWING COTTON 27 TEX.X 906	IS 1720 VARIETY 35.

NOTE:-
SEWING SHOWN THUS------&
TO BE 3 STICHES PER CENTIMETRE

OBSOLESCENT

AMENDMENTS	CHD	SIG	DATE
D.C:-6159-I.DRG.REDUCED & NEW COPY SEALED IN SUPERSESSION OF EXISTING ONE.			9.10.96
(a) D.C:- 6300-I NOM. & CAT/PT. NO. AMENDED			11.11.98
D.C:- 6303-I:- DRG. ENDORSED "OBSOLESCENT"			16 11.98

FOR EXPLANATION OF DIMENSIONING ETC, SEE CQA(I) GUIDE No 001-1992. THIRD ANGLE PROJECTION DIMENSIONS ARE IN mm	DRN	Sd/-	APPROVED Sd/- FOR DIRECTOR IRDE D.DUN.
	TCD	Sd/-	
	CHD	Sd/-	
	CHD	Sd/-	DATE:- 19.4.75
MATL & SPEC:- AS ON DRG.	USED ON		
	BASED ON		
	CAT/PT No	3940-000011 (a)	
FINISH & SPEC:- CLEAN	DRG No	IRDE-1077/17	
	SCALE	: 1 Sr	OF

TITLE - SLING, CARRYING, GUN SIGHT. (a)

REDUCED DRG. PREPARED AT CQA(I) DEHRA DUN
PREPARED BY : Sd/-
CHECKED BY : Sd/-
DATE:

FOR EXPLANATION OF DIMENSIONING ETC, SEE CQA GUIDE No. OCI-1992.
THIRD ANGLE PROJECTION
DIMENSIONS ARE IN mm

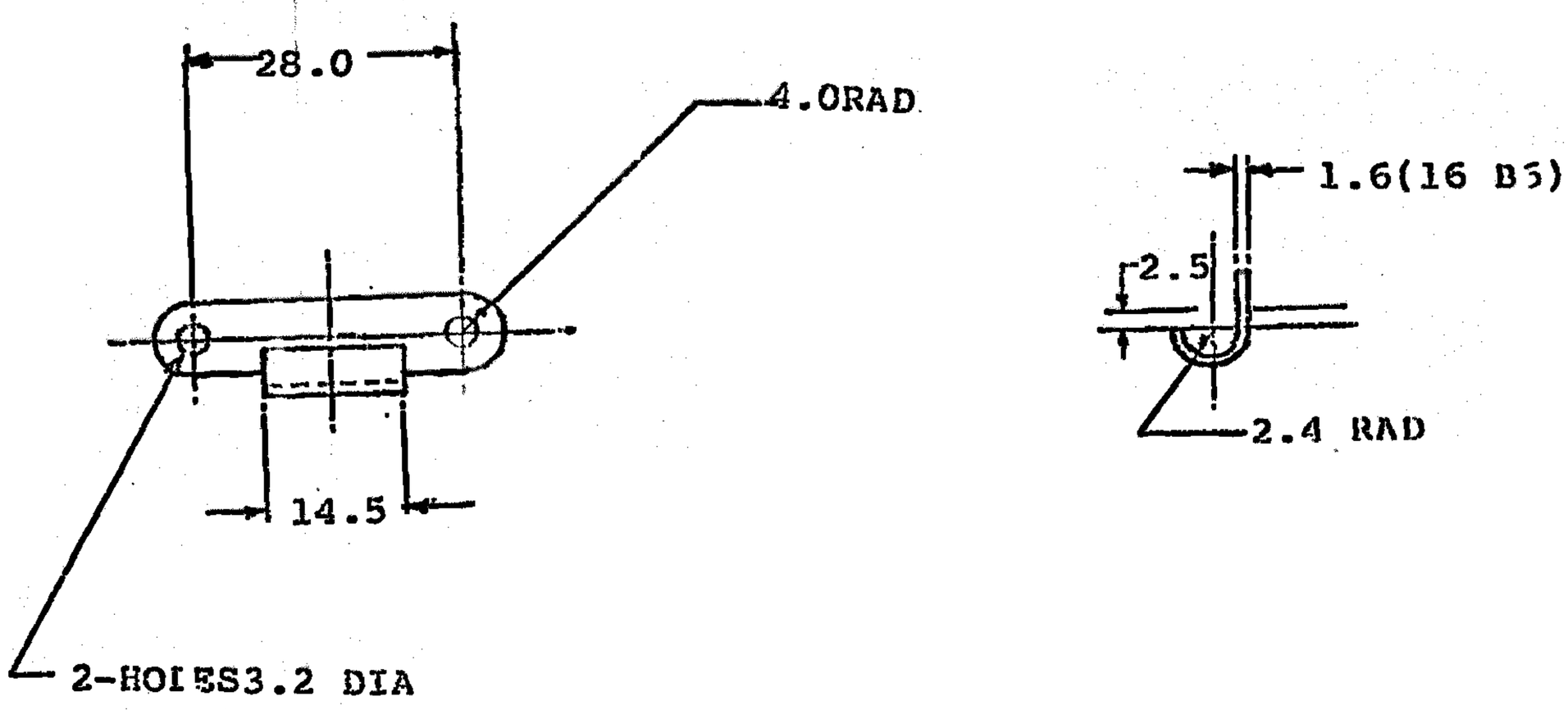

FINISH: RUST PROOFED CLASS B OF IS:3618-1966 BEFORE PAINTING.
(f) (ii) APPLY PRIMER OF IS:2075-2017 & PAINTED OF IS:8983-1978 (ISC No.294 OF IS:5-2007) EXCEPT BEARING SURFACES AFTER ASSY.

SYMB	AMENDMENTS	CLD	SIG	DATE
(f)	D.C:-7224-I FINISH AMENDED			16-4-19
	(e) DC:7205-I. MATL. AMENDED.			23-7-18
	(d) DC:7136-I. MATL. AMENDED.			17-1-17
	D.C:-6386-I:- "OBSOLESCENT" CANCELLED.			23.6.99
	D.C:-6303-I:- DRG. ENDORSED "OBSOLESCENT."			16.11.98
(c)	DC:-6088-I. DRG. REDUCED & NEW COPY SEALED IN SUPERSESSION OF EXISTING ONE			12.2.96

MATL & SPEC	STEEL, Gde.-ISH330S TO IS:5986-2017
FINISH & SPEC	SEE ABOVE
TITLE:-	HOOK, FASTENER

DRN	
TCD	
CHD	
CHD	
USED ON	
(d) BASLD ON (e)	
CAT/PT No.	5340-002339
DRG No.	IRDE 1077/15
SCALE	: SH OF

APPROVED
sd/-
FOR DIRECTOR
IRDE DEHRADUN
DATE:- 9.4.75

D.C.(I):-0872-I(P), 3349-I, 3379-I, 4147-I, 5687-I, 6088-I, 6303-I, 6386-I, 7136-I, 7205-I, 7224-I

VETTED BY ... Dy. Dir. Gen. ... 21/8/85

REVISED SRG. PREPARED AT CQA(I) DEHRA DUN
PREPARED BY ..
CHECKED BY ..
DATE:

FOR EXPLANATION OF DIMENSIONING ETC, SEE CQA(I)GUIDE No. 001-1992.
THIRD ANGLE PROJECTION
DIMENSIONS ARE IN mm

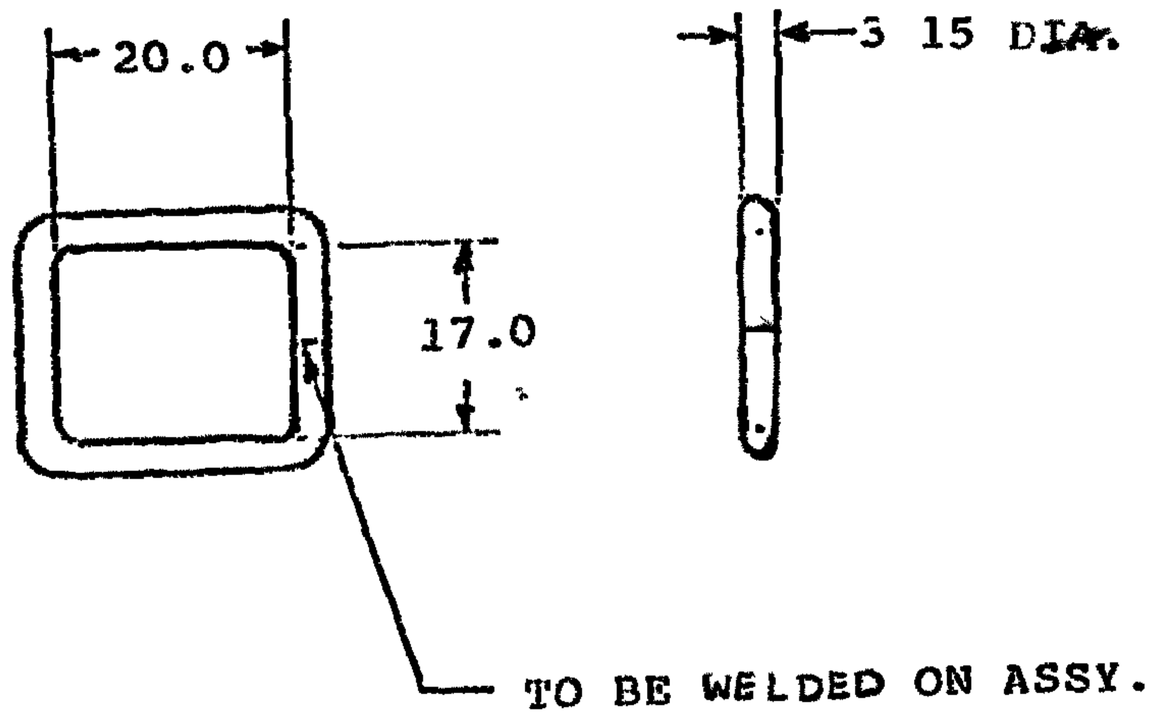

MATL:- STEEL WIRE OF IS: 280-1978

FINISH:- 1. RUST PROOFED CLASS 'B' OF IS:3618-1966 BEFORE PAINTING
2. PAINTED OF 8983-1978 (ISC No.294 OF IS:5-1978) EXCEPT BEARING SURFACES AFTER ASSEMBLY.

SYMB	AMENDMENTS	CHD	SIG	DATE
(b)	D.C:-7236-I MATL AMENDED			22.1.20
	D.C:-6386-I:- "OBSOLESCENT" CANCELLED.			23.6.90
	D.C:-6303-I:- DRG. ENDORSED. "OBSOLESCENT."			16.11.98
(a)	DC:-6088-I. DRG. REDUCED & NEW COPY SEALED IN SUPERSESSION OF EXISTING ONE			12.2.96

MATL & SPEC	M.S WIRE IS:280-2006, 1/2 HARD (CHEMICAL COMPOSITION AS PER IS:7887-1992, Gde-7) (b)
FINISH & SPEC	SEE ABOVE
TITLE:-	LOOP, FASTENER

DRN	
TCD	
CHD	
CHD	
SED ON	
BASED ON	
CAI/PI No.	5340-002340
DRG No.	IRDE 1077/14
SCALE	: SH OF

APPROVED
sd/-
FOR DIRECTOR
IRDE DEHRADUN

DATE:- 9.4.75

D.C.(I):-0872-I(P), 3349-I, 4147-I, 6088-I.
6303-I, 6386-I, 7236-I.

VETTED BY... 6/505 01/2 amd

FOR EXPLANATION OF DIMENSIONING ETC, SEE CQA(I)GUIDE No. 001-1992.
THIRD ANGLE PROJECTION
DIMENSIONS ARE IN mm

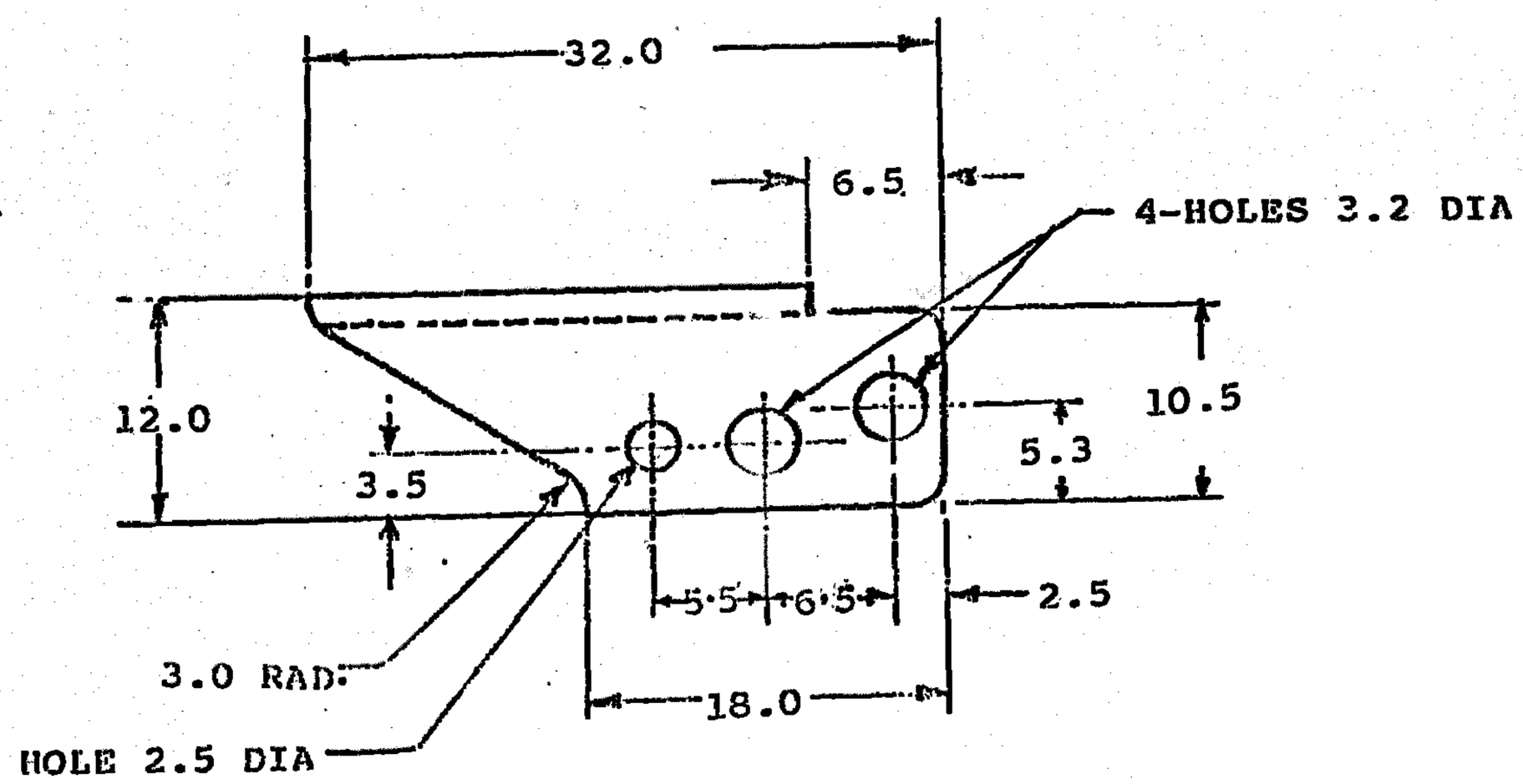

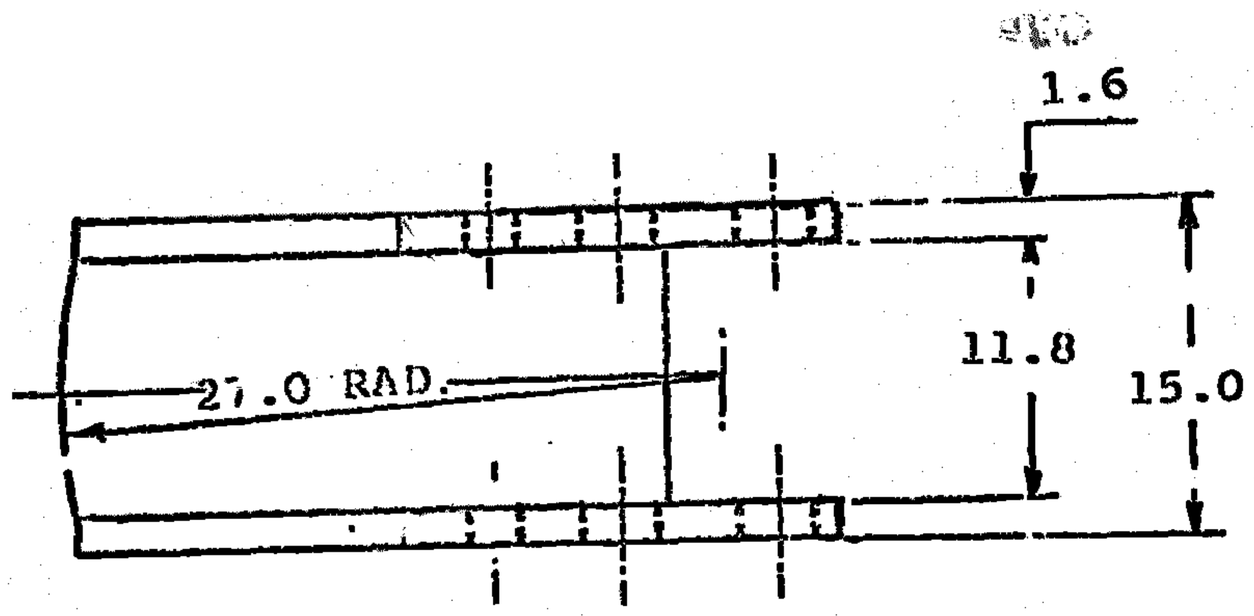

FINISH:-RUST PROOFED CLASS B OF IS:3618-1966 BEFORE PAINTING.
(f) (ii) APPLY PRIMER OF IS:2075-2017 & PAINTED OF IS:8983-1978 (ISC No.294 OF IS:5-2007) EXCEPT BEARING SURFACES AFTER ASSY

SYMB	AMENDMENTS	CHD	SIG	DATE
	(e) DC: 7205-I. MATL. AMENDED.			23-7-18
	(d) DC: 7136-I(P). MATL AMENDED.			17-1-17
	D.C:- 6386-I:- "OBSOLESCENT" CANCELLED.			23.6.99
	D.C:- 6303-I:- DRG. ENDORSED "OBSOLESCENT."			16.11.98
(c)	DC:- 6088-I. DRG. REDUCED & NEW COPY SEALED IN SUPERSESSION OF EXISTING ONE			12.2.96
	(a) DC: 7224-I. FINISH AMENDED			16-4-49

MATL & SPEC	STEEL, Gde-ISH3305 TO IS:5986-2017 (d) (e)
FINISH & SPEC	SEE ABOVE
TITLE:-	CLIP, SPRING TENSION

DRN	
TCD	
CHD	
CHD	
USED ON	
BASED ON	
CAI/PI No.	5340-007714
DRG No.	IRDE 1077/13
SCALE	: SH OF

APPROVED
sd/-
FOR DIRECTOR
IRDE DEHRADUN

DATE:-19.4.75

D.C.(I):-0872-I(P), 3349-I, 5519-I, 5687-I, 6088-I. VETTED BY.... CM II....
6303-I, 6386-I, 7136-I, 7205-I, 7224-I

DRG. PREPARED AT CQA(I) DEHRADUN
PREPARED BY
CHECKED BY
DATE

FOR EXPLANATION OF DIMENSIONING ETC, SEE CQA(I)GUIDE No. 001-1992.
THIRD ANGLE PROJECTION
DIMENSIONS ARE IN mm

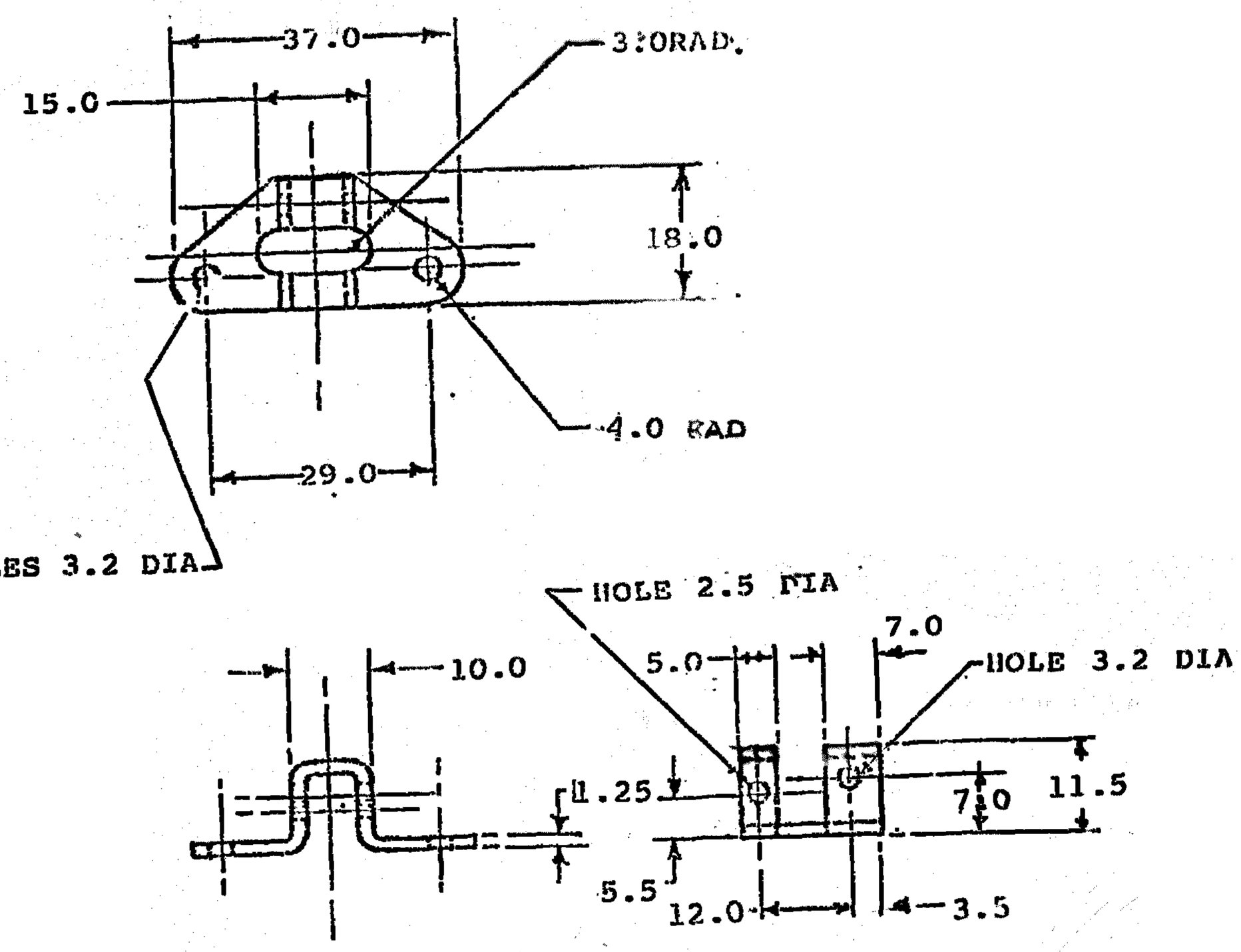

FINISH:
(i) TO BE RUST PROOFED BEFORE PAINTING. (f)
(ii) APPLY PRIMER TO IS: 2075-2017 & THEN PAINTED (ISC No. 294-OF IS: 5-2007)
TO IS: 8983-1978 TO EXCEPT BEARING SURFACES AFTER ASSY.

SYMB	AMENDMENTS	CHD	SIG	DATE
(f)	D.C:-7224-I. FINISH AMENDED			16-4-19
(e)	DC: 7205-I. MATL. AMENDED.			23-7-18
(d)	DC:- 7136-I:- MATL. AMENDED.			17-1-17
	D.C:-6386-I:- "OBSOLESCENT" CANCELLED.			23.6.99
	D.C:-6303-I:- DRG. ENDORSED "OBSOLESCENT"			16.11.98
(c)	DC:-6088-I. DRG. REDUCED & NEW COPY SEALED IN SUPERSESSION OF EXISTING ONE			12.2.96

MATL & SPEC: (d) STEEL Gde. ISH3305 TO IS: 5986-2017 (e)

FINISH & SPEC: SEE ABOVE

TITLE:- BRACKET, DOUBLE ANGLE

DRN | TCD | CHD | CHD | USED ON | CASED ON | CAT/PT No. | DRG No. | SCALE

APPROVED
sd/-
FOR DIRECTOR
IRDE DEHRADUN

DATE:- 19.4.75

5340-007896

IRDE 1077/12

SCALE : | SH OF

D.C.(I)-0872-I(P), 3349-I, 5319-I, 5687-I, 6088-I, VETTED BY.
6303-I, 6386-I, 7136-I, 7205-I, 7224-I,
SIG & DATE

RECD DRG. REDUCED TO CQA(I) SEEN BY
DRAWN BY
CHECKED BY

(5G)

FOR EXPLANATION OF DIMENSIONING Etc., SEE CQA(I)GUIDE No.001-1992
THIRD ANGLE PROJECTION — DIMENSIONS ARE IN MILLIMETRES.

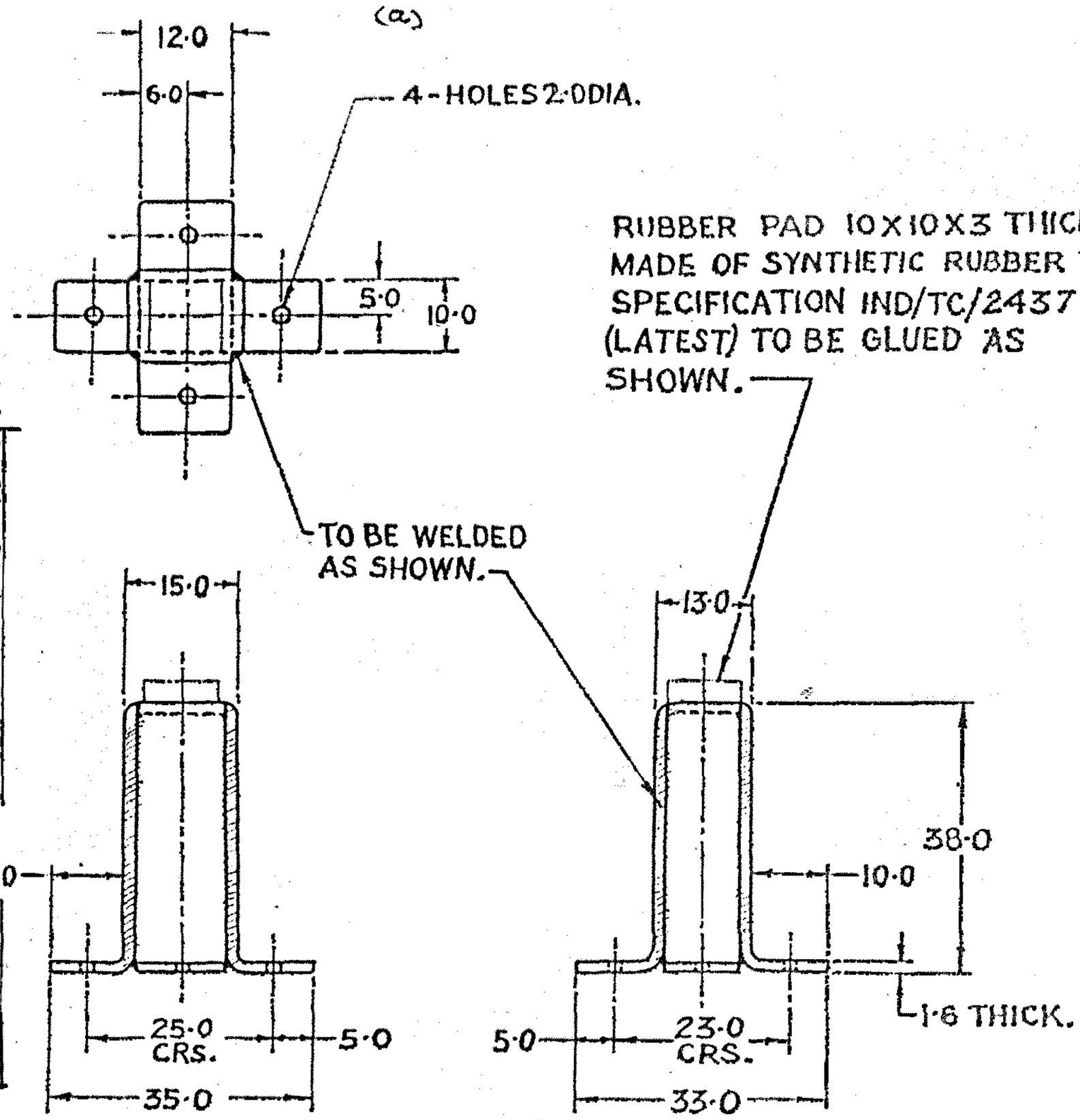

(e)	D.C.:-7224-I FINISH AMENDED		16-4-19
(d)	(e) DC:- 7205-I. MATL. AMENDED.		23-7-18
(c)	DC:- 7136-I:- MATL. AMENDED.		17-1-17
(b)	D.C.-7205-I. 0.85 ZEGENT. CANCELLED		8-9-15

FINISH:- ~~TO BE PAINTED WITH LATEST APPROVED SERVICE COLOUR EXCEPT BEARING SURFACES AFTER ASSY.~~
(e) 2 APPLY PRIMER TO IS:2075-2017 & PAINTED OF IS:8983-1978 (ISC NO-294 OF IS:5-2007) AFTER ASSY. EXCEPT BEARING SURFACES.

SYM	AMENDMENTS	CHKD	SIG	DATE
	D.C:-6303-I:-DRG. ENDORSED "OBSOLESCENT."			16.11.98
	(b) D.C.(I):-5519-I. CAT/PT. No. ADDED.			16.11.91
	(a) D.C.(I):-3379-I:- 4-HOLES 2·0 DIA. WERE 1·6 DIA.			12.7.76
	D.C.(I):-3349-I. DRG. REVISED AND SEALED IN SUPERSESSION OF EXISTING PROVISIONALLY SEALED DRG.			16.6.76

MATL & SPECN	STEEL. Gde.-ISH 330S (OR) Gde-ISH 410S TO IS:5986-2017 (e) (d)
FINISH	AS ON DRG.
TITLE	SUPPORT

DRN		APPROVED for DIRECTOR IRDE, DEHRADUN
TRCD		
CHKD		
CHKD		Date: 9.12.75
USED ON		
BASED ON		
CAT/PT.No.	5340-007895 (b)	
DRG. No.	IRDE 1077/11	
SCALE	1/1 1 SHT OF	

POLYESTER NEGATIVE PREPARED AT CQA(I)D.DUN 7224-I.
PREPARED BY:
CHECKED BY:
DATE:-

D.C.(I):-0872-I(P), 3349-I, 3379-I, 5519-I, 6303-I, 7136-I, 7205-I. VETTED BY
I/C QM.....

FOR EXPLANATION OF DIMENSIONING Etc., SEE CQA(I)GUIDE No,001-1992

THIRD ANGLE PROJECTION · DIMENSIONS ARE IN MILLIMETRES.

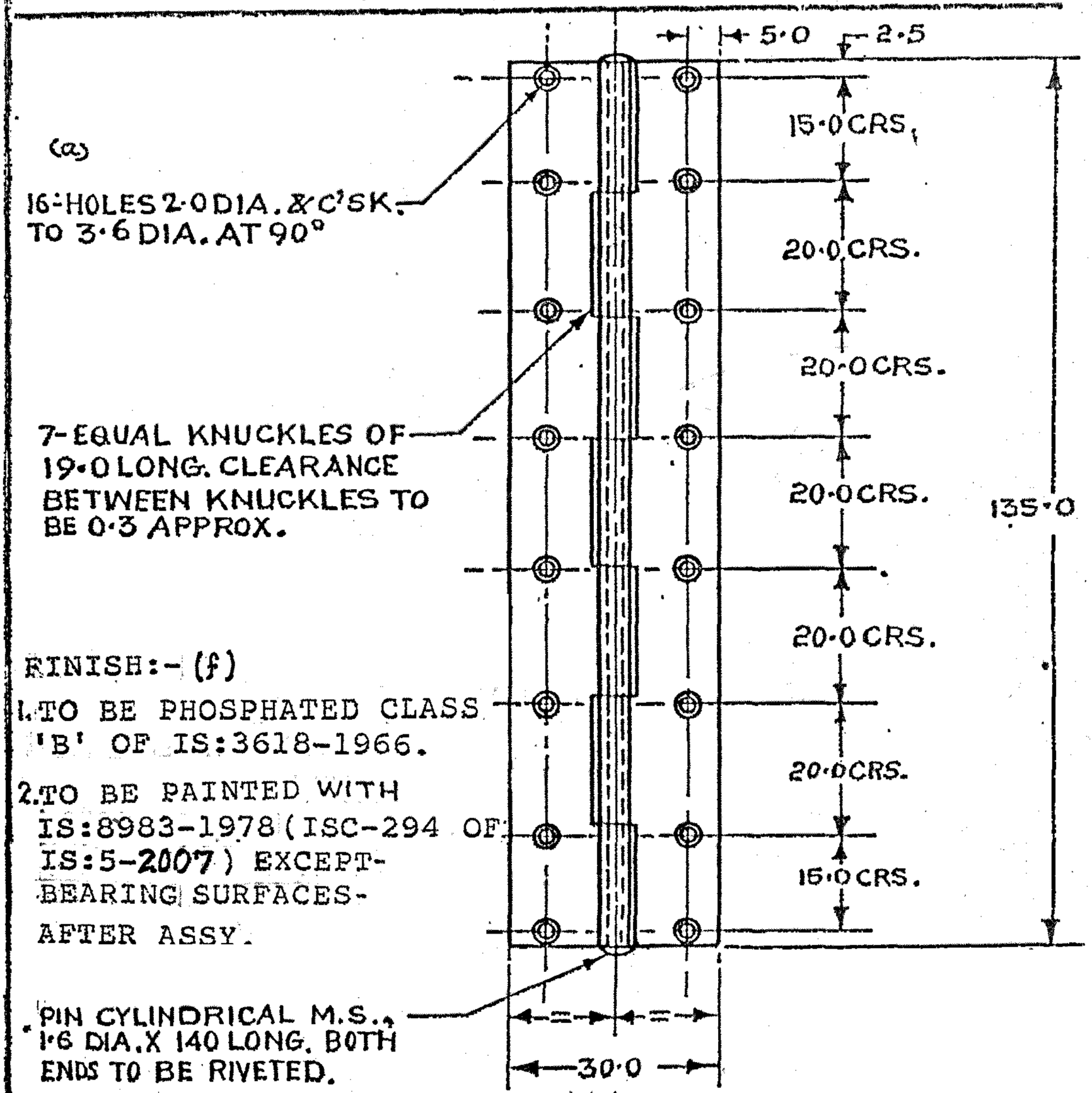

FINISH:- (f)

1. TO BE PHOSPHATED CLASS 'B' OF IS:3618-1966.
2. TO BE PAINTED WITH IS:8983-1978 (ISC-294 OF IS:5-2007) EXCEPT- BEARING SURFACES- AFTER ASSY.

(e)	DC:7205-I. MATL. AMENDED.		23 2/18
(d)	DC:- 7136-I:- MATL. AMENDED.		17 1/17
(c)	D.C. 7075-I. OBSOLESCENT CANCELLED		8 9/15

SYM	AMENDMENTS	CHKD	SIG	DATE
	D.C:-6303-I:- DRG. ENDORSED "OBSOLESCENT"			16.11.98
	(b) D.C.(I):-5519-I. NOM. AMENDED & CAT/PT. No. ADDED.			16.11.91
	(a) D.C.(I):-3379-I:- 16-HOLES 2·0 DIA. WERE 1·6 DIA & C'SK. 3·6 DIA. WAS 3·0			12.7.76
	D.C.(I):-3349-I. DRG. SEALED.			16.6.76
	D.C.(I):-0872-I (P):- DRG. PROV. SEALED.			1.6.75
(f)	D.C.:-7224-I FINISH AMENDED	Gh		16-4-19

MATL & SPECN	STEEL Gde.-ISH410S TO IS: 5986-2017 (d)
FINISH	SEE ABOVE.
TITLE (b)	HINGE, BUTT

DRN		APPROVED for DIRECTOR
TRCD	P.P.	IRDE, DEHRADUN
CHKD		Date: 19-4-75
CHKD		
USED ON		
BASED ON		
CAT / PT. No.	5340-007600 (b)	
DRG. No.	IRDE:-1077/9	
SCALE	1/1	SHT. OF

POLYESTER NEGATIVE PREPARED AT CQA(I)D.DUN

PREPARED BY:- DATE:-

CHECKED BY:-

D.C. (I):-0872-I (P), 3349-I, 3379-I, 5519-I.
630 3-I. 7075-I 7136-I, 7205-I. 7224-I.

VETTED BY

I/C QM.....

(2B)

FILINGCAD

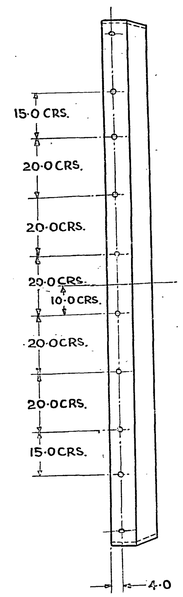

VIEW IN DIRECTION OF ARROW 'X'

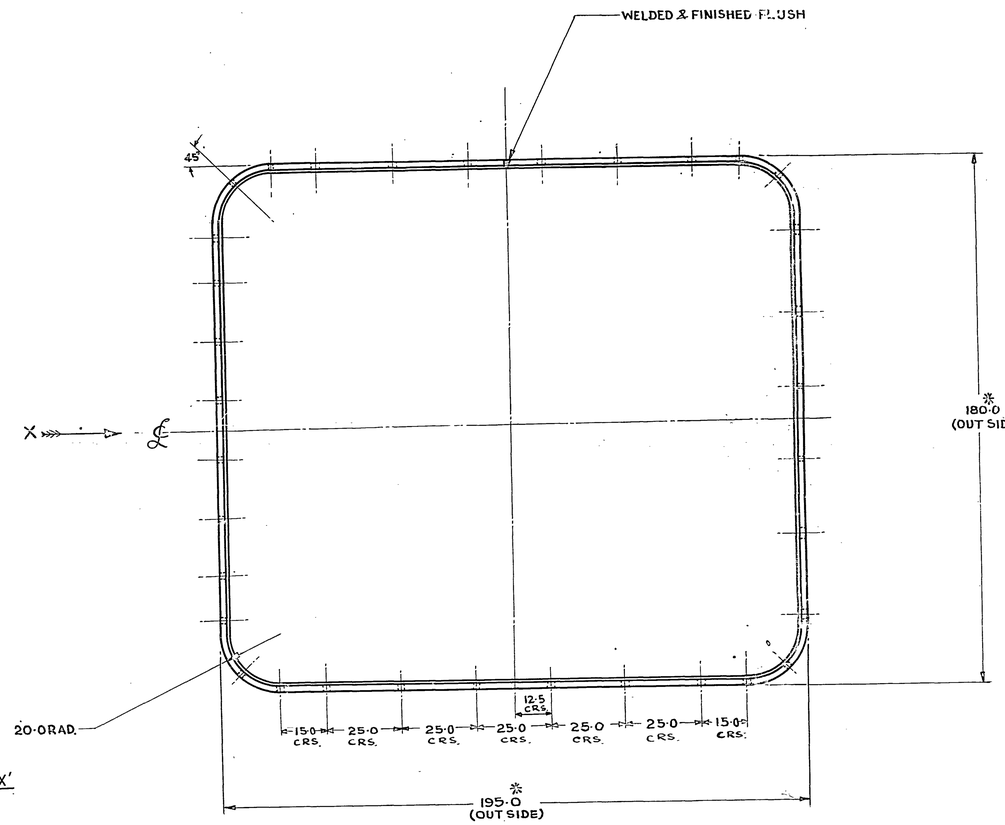

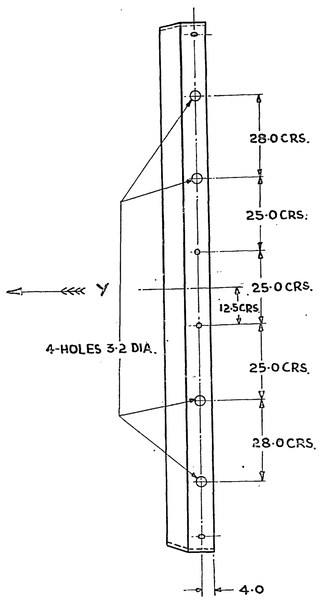

VIEW IN DIRECTION OF ARROW 'Y'

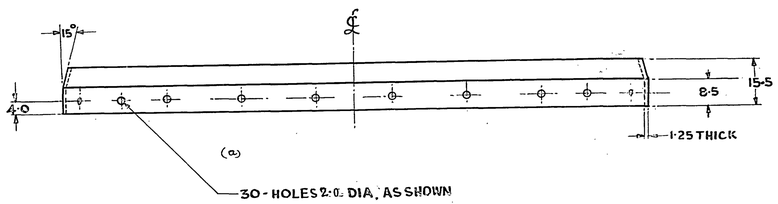

NOTE:-

1. TO BE RUST PROOFED BEFORE PAINTING
2. DIMENSIONS MARKED WITH ASTERIC TO SUIT IRDE 1077/7

~~FINISH:- TO BE PAINTED WITH LATEST APPROVED SERVICE COLOUR EXCEPT BEARING SURFACES AFTER ASSEMBLY.~~ (c)

FINISH:-
(f) TO BE PAINTED APPLY PRIMER TO IS:2075-2017 & PAINTED TO IS:8983-1978 (ISC-294 OF IS:5-2007) EXCEPT BEARING SURFACES AFTER ASSEMBLY.

(e) MATL & SPEC :-
STEEL Gde-ISH 4105 TO IS:5986-2017.

SYM	ZONE	AMENDMENTS	CHKD	SIG	DATE
0		D.C.(I):- 0872-I (P):- DRG. PROV. SEALED.			1/6/75
		D.C.(I):-3349-I. DRG. SEALED			16.6.76
(a)		D.C.(I):- 3379-I:- 30 HOLES 2·0 DIA. WERE 1·6 DIA.			12.7.76
		(b) 5519-I. NOM. AMENDED & CAT/PT. No. ADDED.			16/11/91
		(c) D.C:- 6284-I. FINISH & MATL. AMENDED.			26/8/92
		D.C:- 6303-I:- DRG. ENDORSED "OBSOLESCENT."			16/11/92
		D.C. 7075-I.			9/9/15
(b)		OBSOLESCENT CANCELLED.			
		(d) DC: 7136-I. MATL. AMENDED.			17/1/17
		(e) DC: 7205-I. MATL. AMENDED.			23/7/18
	(f)	D.C:- 7224-I FINISH AMENDED			16/7/19

D.C. (I):- 0872-I(P), 3349-I, 3379-I, 5519-I, 6284-I, 6303-I, 7075-I, 7136-I, 7205-I, 7224-I

FOR EXPLANATION OF DIMENSIONING ETC., SEE IRDE NOTE SHEET No 1
THIRD ANGLE PROJECTION
DIMENSIONS ARE IN MILLIMETRES

DRN		APPROVED
TRCD	AKRoy	FOR DIRECTOR IRDE DEHRADUN
CHKD		DATE 19-4-[illegible]
CHKD		

MATL & SPECN. (c) (e) (d)
~~STEEL Gde ISH 4105 TO IS: 5986-2017~~
~~STEEL SHEET IS:1079/St 42-1079~~
~~STEEL Fe 410 TO IS 11079 =1988~~
(e) AS ON DRG.

USED ON
USED ON
CAT/PT NO 5340-007901 (b)

FINISH: SEE ABOVE

DRG. NO. IRDE 1077/8

SCALE 1/1 SHT. 01

(b) SEAL STRAPPING

(5G)

FOR EXPLANATION OF DIMENSIONING Etc., SEE CQA(I)GUIDE No.001-19921.
THIRD ANGLE PROJECTION DIMENSIONS ARE IN MILLIMETRES.

POLYESTER NEGATIVE PREPARED AT CQA(I)D.DUN DC(I):-0872-I(P),3349-I. 6303-I, 6386-I, 7205-I.
PREPARED BY:- VETTED BY:-
CHECKED BY:- DATE:- C I/C QM...

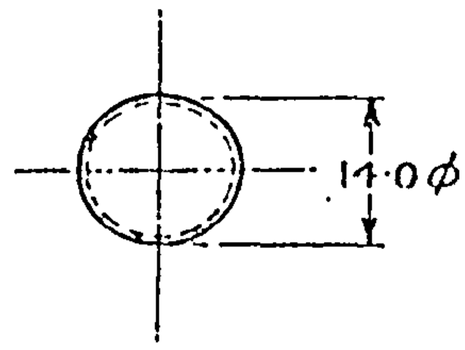

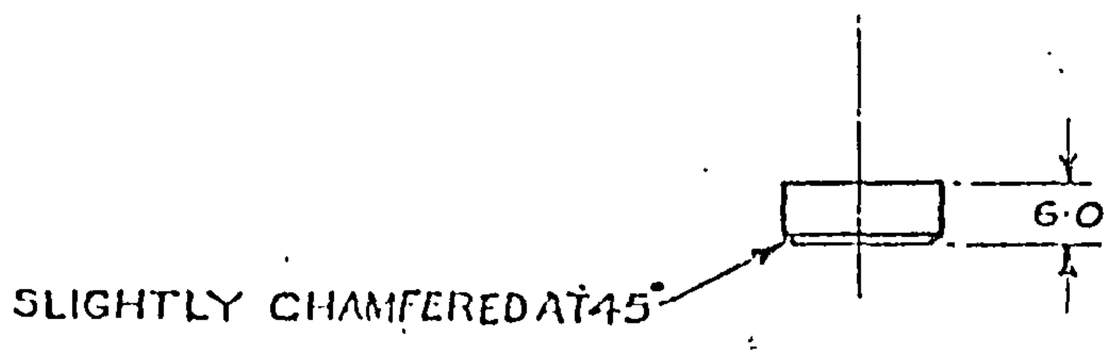

BLOCK

SYM	AMENDMENTS	CHKD	SIG	DATE
(a)	DC: 7205-I. MATL. AMENDED			23 7/18
	D.C:-6386-I:- "OBSOLESCENT" CANCELLED.			23 6/92
	D.C:- 6303-I:- DRG. ENDORSED "OBSOLESCENT."			16-11-98
	DC.(I):3349-I. DRG. SEALED.			16-6-76
	DC.(I):-0872-I(P). DRG. PROV. SEALED.			1-6-75

MATL & SPECN	MILD STEEL Gde-1CC4 TO IS: 1570(Pt2)1979 (a)
FINISH	CLEAN
TITLE	COVER, BATTERY COMPARTMENT

DRN		APPROVED
TRCD		for DIRECTOR
CHKD		IRDE, DEHRADUN
CHKD		Date 19-4-75
USED ON		
BASED ON		
CAT / PT.No.		
DRG. No.	IRDE 1077/6	
SCALE	1/1	SHT 3 OF 3.

(56)

FOR EXPLANATION OF DIMENSIONING Etc., SEE CQA(I)GUIDE No.001-1992
THIRD ANGLE PROJECTION DIMENSIONS ARE IN MILLIMETRES.

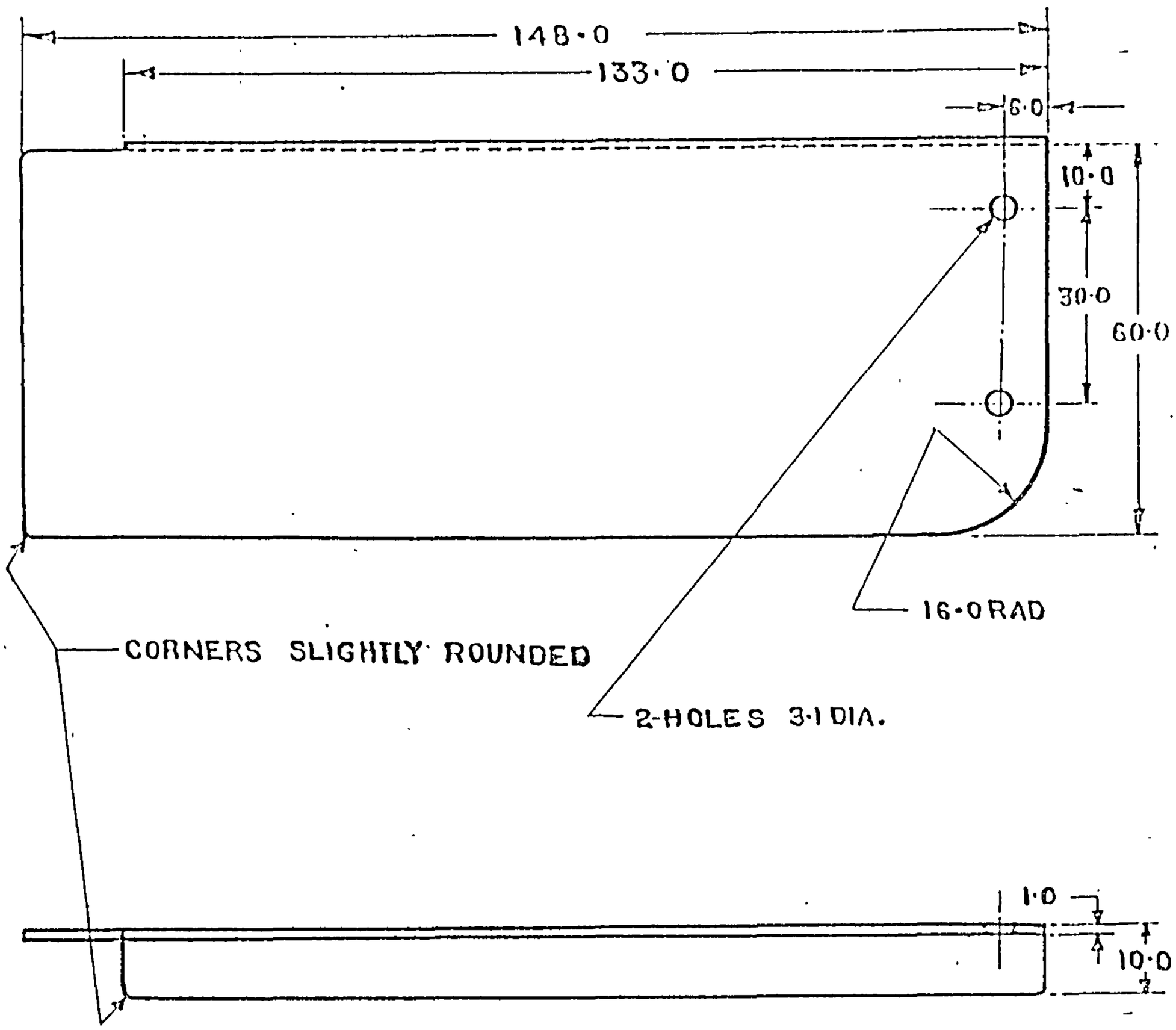

POLYESTER NEGATIVE PREPARED AT CQA(I)D.DUN
PREPARED BY:-
CHECKED BY:-
DATE:-

D.C.(I):-0872-I(P),3349-I,6303-I.
6386-I,7136-I,7205-I.

VETTED BY
I/C QM

SYM		CHKD	SIG	DATE
(b)	DC: 7205-I. MATL. AMENDED.			23-7-18
(a)	DC:-7136-I:- MATL. AMENDED			17-1-17
	D.C:- 6386-I:- "OBSOLESCENT" CANCELLED.			23/6/99
	D.C:- 6303-I:- DRG. ENDORSED "OBSOLESCENT"			16-11-98
	D.C.(I):-3349-I DRG. SEALED.			16-6-76
	D.C.(I):-0872-I(P):- DRG. PROV. SEALED.			1-6-75

MATL & SPECN: STEEL Gde:-IS H410S TO IS: 5986-2017 (b)(a)

FINISH: CLEAN

TITLE: COVER, BATTERY COMPARTMENT

COVER

DRN		APPROVED for DIRECTOR IRDE, DEHRADUN
TRCD		
CHKD		
CHKD		Date: 19-4-75
USED ON		
BASED ON		
CAT / PT.No.		
DRG. No.	IRDE 1077/6	
SCALE	:-1/1	SHT-2 OF-3

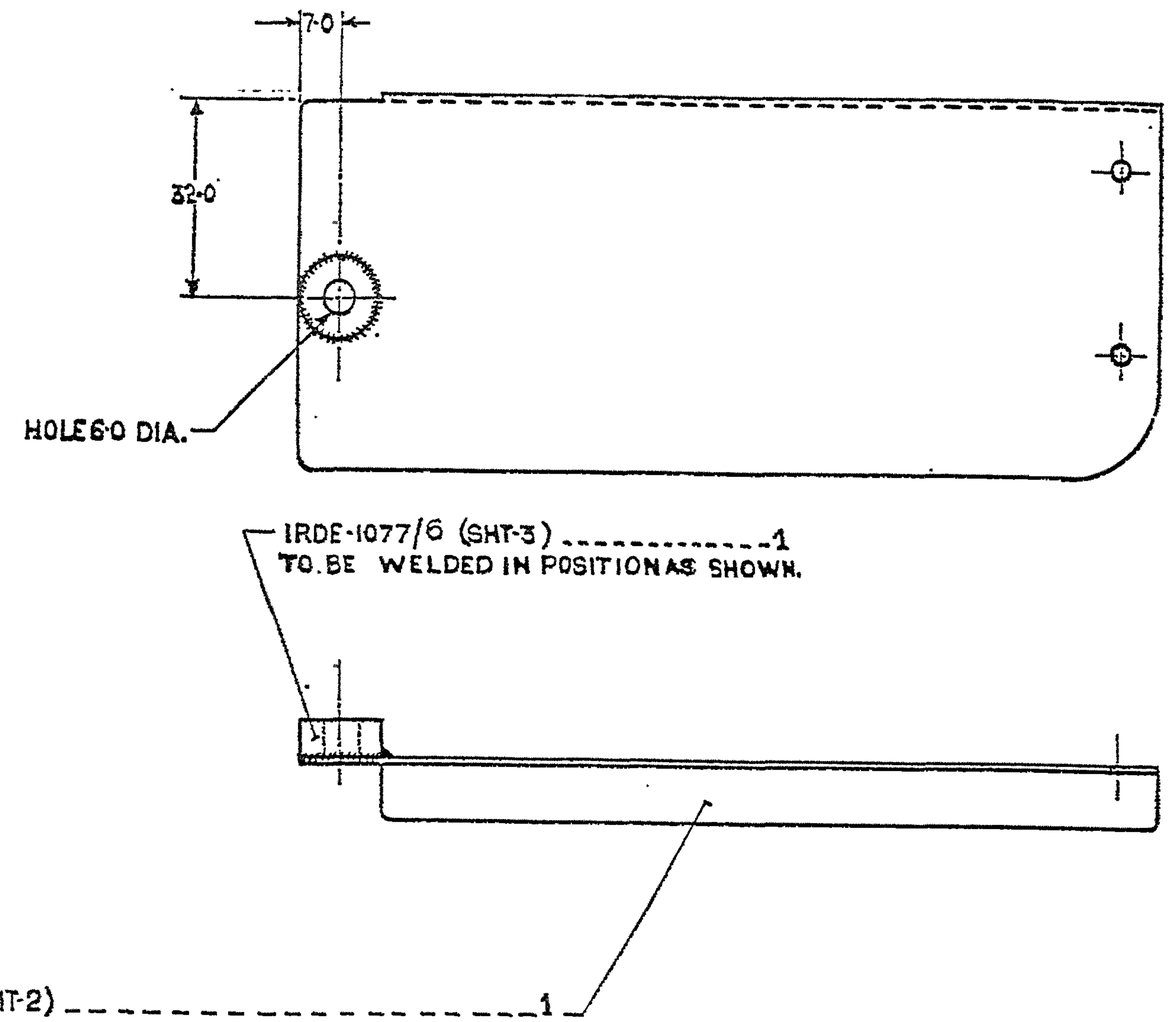

AMENDMENTS	CHD	SIG	DATE
D.C:-6159-I. DRG. REDUCED & NEW COPY SEALED IN SUPERSESSION OF EXISTING ONE.			9.10.96
D.C:- 6303-I:-DRG. ENDORSED "OBSOLESCENT".			16.11.98
D.C:- 6386-I:- "OBSOLESCENT" CANCELLED			23-6-99
(a) D.C:-7224-I FINISH AMENDED			16-4-19

FINISH: 1. TO BE PHOSPHATED CLASS 'B' OF IS:3618-1966.

(a) 2. APPLY PRIMER TO IS:2075-2017 & PAINTED TO IS:8983-1978 (ISC-294 OF IS:5-2007) AFTER ASSY. EXCEPT BEARING SURFACES.

TITLE:-

COVER, BATTERY COMPARTMENT.

FOR EXPLANATION OF DIMENSIONING ETC., SEE CQA(I) GUIDE No 001-1992. THIRD ANGLE PROJECTION. DIMENSIONS ARE in mm

DRN	Sd/-	APPROVED Sd/- FOR DIRECTOR IRDE D. DUN
TCD	Sd/-	
CHD	Sd/-	
CHD	Sd/-	DATE 19.4.75

MATL & SPEC:- SEE DETAILS

USED ON	
BASED ON	
CAT/PT No.	

FINISH & SPEC:- AS ON DRG.

DRG No.	IRDE-1077/6
SCALE 1 :	SH 1 OF 3

D.C.(I) 0872-I(P), 3349-I, 6159-I, 6303-I, 6386-I, 7224-I

REDUCED, DRG. PREPARED AT CQA(I) DEHRA DUN
PREPARED BY :
CHECKED BY :
DATE:

(56)

FOR EXPLANATION OF DIMENSIONING Etc., SEE CQA(I)GUIDE No.001-1992 .

THIRD ANGLE PROJECTION — DIMENSIONS ARE IN MILLIMETRES.

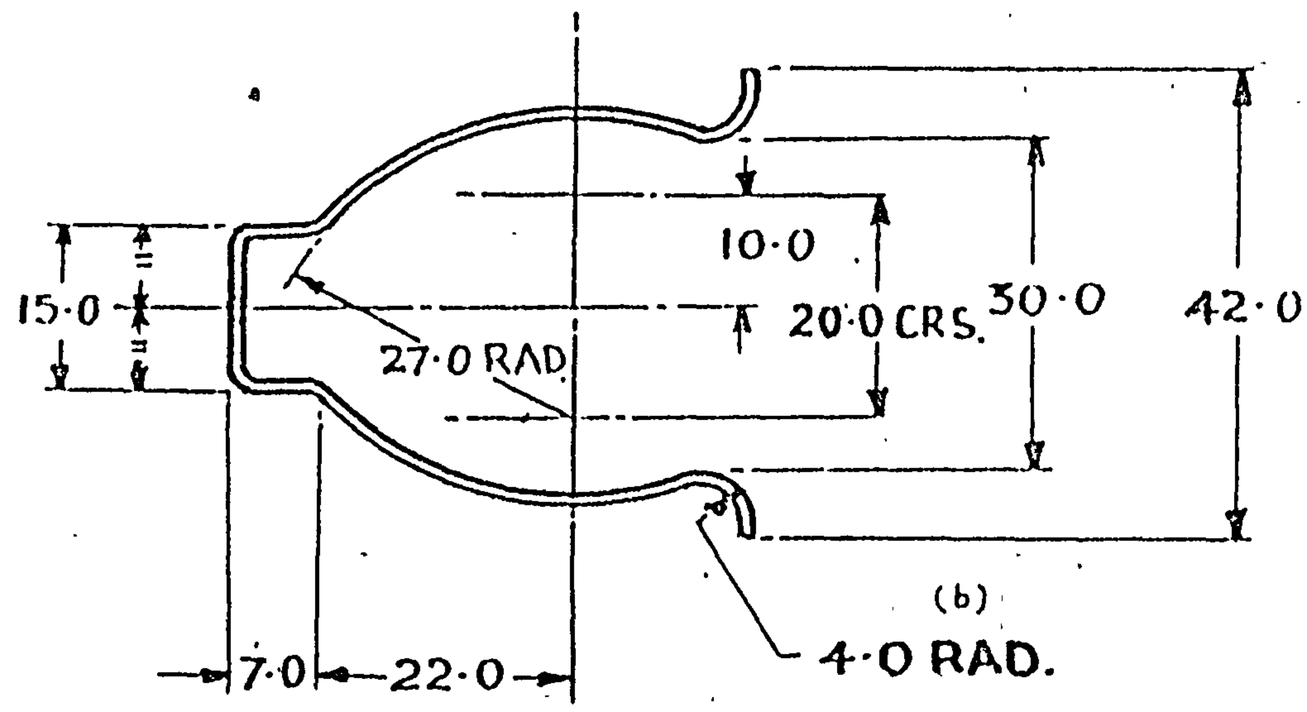

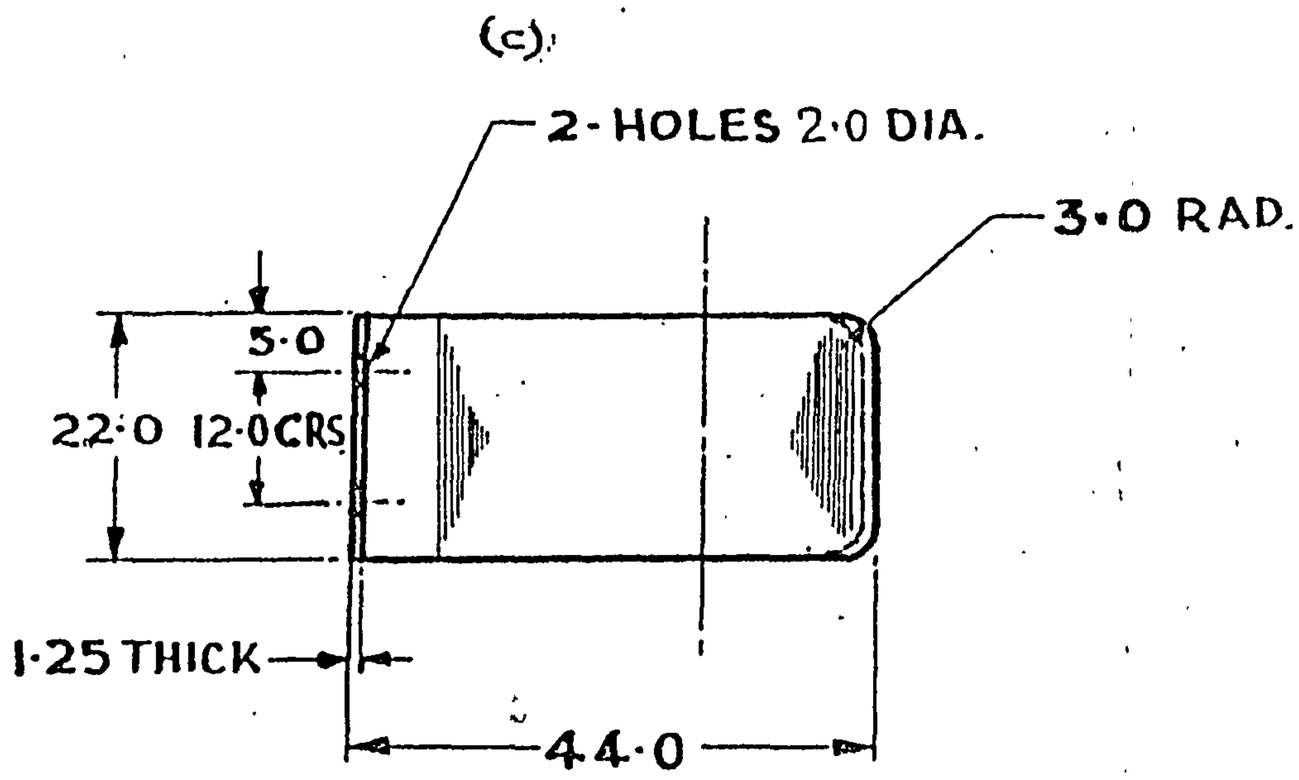

MATL:- PHOSPHOR BRONZE Gde II, HB OF IS:7814-2005 (F)

SYM	AMENDMENTS	CHKD	SIG	DATE
	D.C:-6386-I:-"OBSOLESCENT" CANCELLED.			23.6.99
	D.C:-6303-I:- DRG. ENDORSED "OBSOLESCENT."			16.11.98
	(f) D.C.(1):-5519-I. NOM. AMENDED & CAT/PT. No. ADDED.			16.11.91
	(c) D.C.(1):-3379-I:- 2-HOLES 2·0 DIA. WERE 1·6 DIA.			12.7.76
	(b) D.C.(1):-3349-I:- ARROW FOR 4R CORRECTED & DRG. SEALED.			16.6.76.
	(a) D.C.(1):-0883-I(P) MATL. SPECN. ADDED.			29.7.75
	D.C.(1):-0872-I(P):- DRG. PROV. SEALED.			1.6.75

MATL & SPECN	AS ON DRG.
FINISH	HARDENED & TEMPERED
TITLE	HOLDER, LIGHT (d)

DRN		APPROVED for DIRECTOR IRDE, DEHRADUN
TRCD		
CHKD		Date: 19-4-75
CHKD		
USED ON		
BASED ON		
CAT / PT.No.	6230-000245 (d)	
DRG. No.	IRDE 1077/5	
SCALE	1/1 1 SHT. OF	

(F) D.C. 7033-I(P), MATL & SPEC. AMENDED

D.C.(1):- 0872-I(P), 0883-I(P), 3349-I, 3379-I, 5519-I. 6303-I, 6386-I, 7033-I

VETTED BY: I/C QM

POLYESTER NEGATIVE PREPARED AT CQA(I) D.DUN

PREPARED BY:

CHECKED BY:

DATE:-

FOR EXPLANATION OF DIMENSIONING Etc., SEE CQA(I)GUIDE No.001-1992.
THIRD ANGLE PROJECTION DIMENSIONS ARE IN MILLIMETRES.

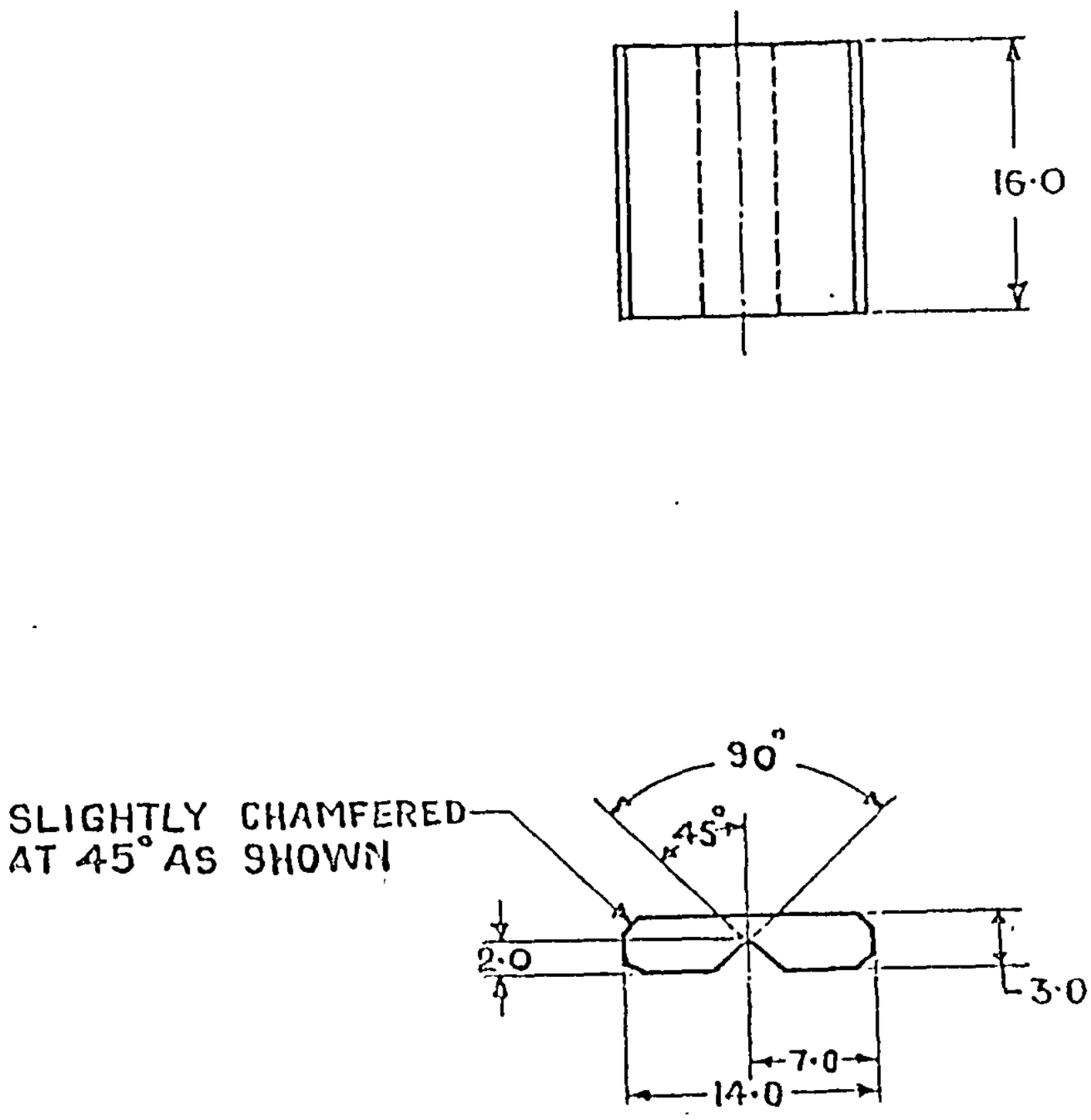

SYM	AMENDMENTS	CHKD	SIG	DATE
(c)	DC: 7205-I. MATL. AMENDED.			23 7/18
(b)	DC:- 7136-I :- MATL. AMENDED.			17-1-17
	D.C:-6386-I:- "OBSOLESCENT" CANCELLED.			23.6.99
	D.C:- 6303-I:- DRG-ENDORSED "OBSOLESCENT."			16.11.98
	(a) D.C.(I):-5519-I. NOM. AMENDED & CAT/PT. No. ADDED.			16.11.91
	D.C.(I):3349-I. DRG. SEALED.			16.6.76
	D.C.(I):-0872-I(P):- DRG. PROV. SEALED.			1.6.75

MATL & SPECN	STEEL Gde:-ISH410S TOIS:5986-2017 (b) (c)
FINISH	CLEAN
TITLE	PLUNGER DETENT (a)

GUIDE STRIP

DRN		APPROVED for DIRECTOR IRDE, DEHRADUN
TRCD		
CHKD		
CHKD		Date: 19-4-75
USED ON		
BASED ON		
CAT / PT.No.	5340-007897 (a)	
DRG. No.	IRDE 1077/4	
SCALE	2/1	1 :- SHT-3 OF-3

D.C.(I):0872-I(P),3349-I,5519-I,6303-I.
6386-I; 7136-I, 7205-I.

POLYESTER NEGATIVE PREPARED AT CQA(I) D.DUN.
PREPARED BY:
CHECKED BY:
DATE:-

VETTED BY
I/C QM:

(56)

FOR EXPLANATION OF DIMENSIONING ETC. SEE CQA(I)GUIDE No.001-1992
THIRD ANGLE PROJECTION — DIMENSIONS ARE IN MILLIMETRES.

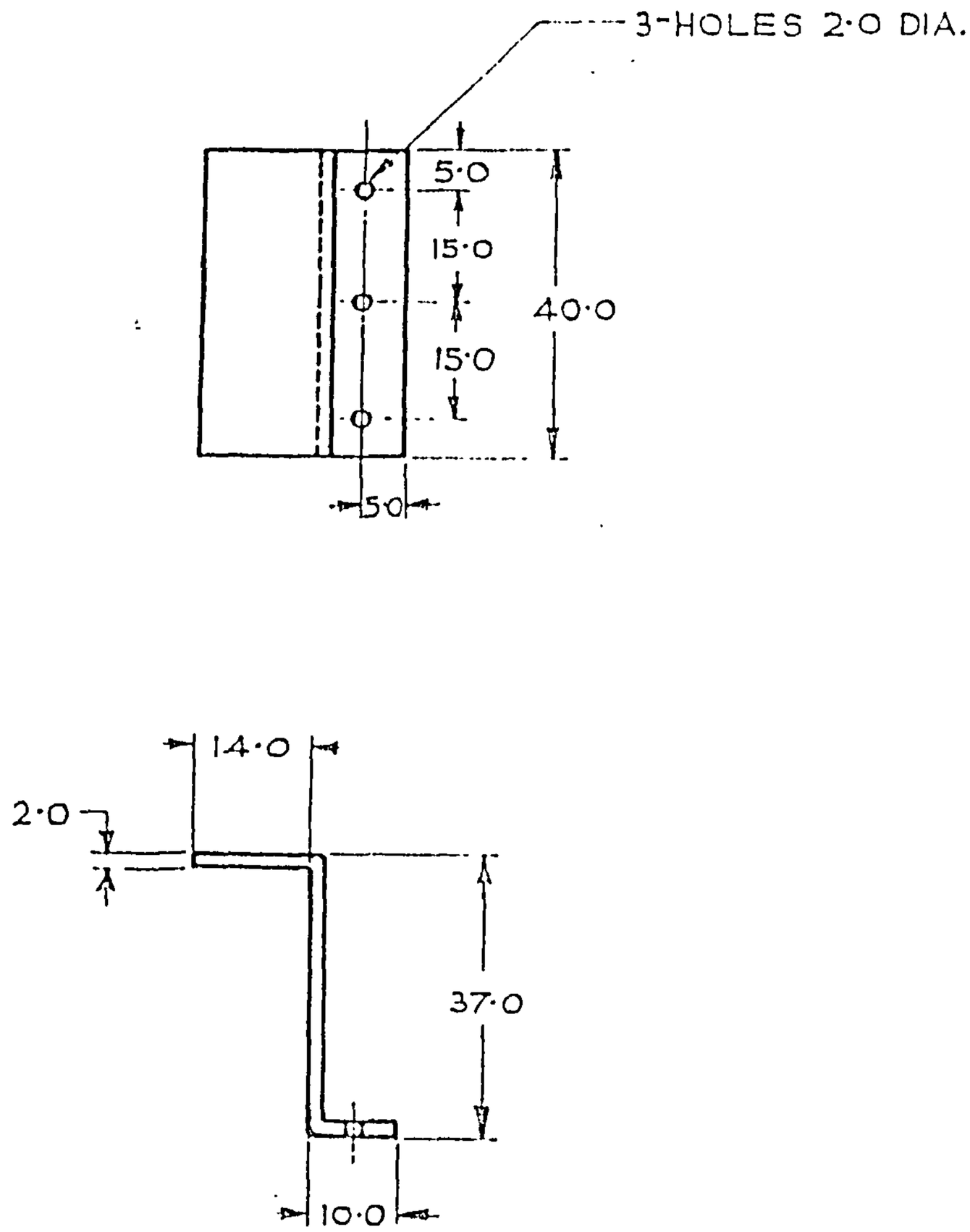

SYM	AMENDMENTS	CHKD	SIG.	DATE
(c)	DC: 7205-I. MATL. AMENDED.			23 Z/18
(b)	DC: 7136-I. MATL AMENDED.			17 1/17
	D.C:- 6386-I:- "OBSOLESCENT" CANCELLED.			23 6/99
	D.C:- 6303-I:- DRG. ENDORSED "OBSOLESCENT"			16.11.98
	(a)D.C.(I):-5519-I. NOM. AMENDED & CAT/PT. No. ADDED.			16.11.91
	D.C.(I):-3700-I:- DESIGN CHANGE & NEW COPY SEALED IN SUPERSESSION OF EXISTING ONE.			10.2.78

MATL & SPECN.	STEEL Gde-ISH410S TO IS:5986-2017 (b) (c)
FINISH	CLEANI
TITLE.	PLUNGER, DETENT (a)

BRACKET

BRN	SAC	APPROVED SAC FOR DIRECTOR IRDE DEHRA-DUN
TRCD	SAC	
CHKD	SAC	
CHKD	SAC	DATE:- 19.4.75
USED ON		
BASED ON		
CAT/PARTN.	5340-007897 (a)	
DRG. No.	IRDE 1077/4	
SCALE	1/1	SHT-2 OF 3

D.C.(I):- 0872-I(P), 3349-I, 3379-I, 3700-I, 5519-I, 6303-I.
6386-I, 7136-I, 7205-I.

VETTED BY: G I/C QM

POLYESTER NEGATIVE PREPARED AT CQA(I) D.DUN
PREPARED BY:
CHECKED BY:
DATE:-

FOR EXPLANATION OF DIMENSIONING Etc., SEE CQA(I)GUIDE No.001-1992
THIRD ANGLE PROJECTION DIMENSIONS ARE IN MILLIMETRES.

(a)

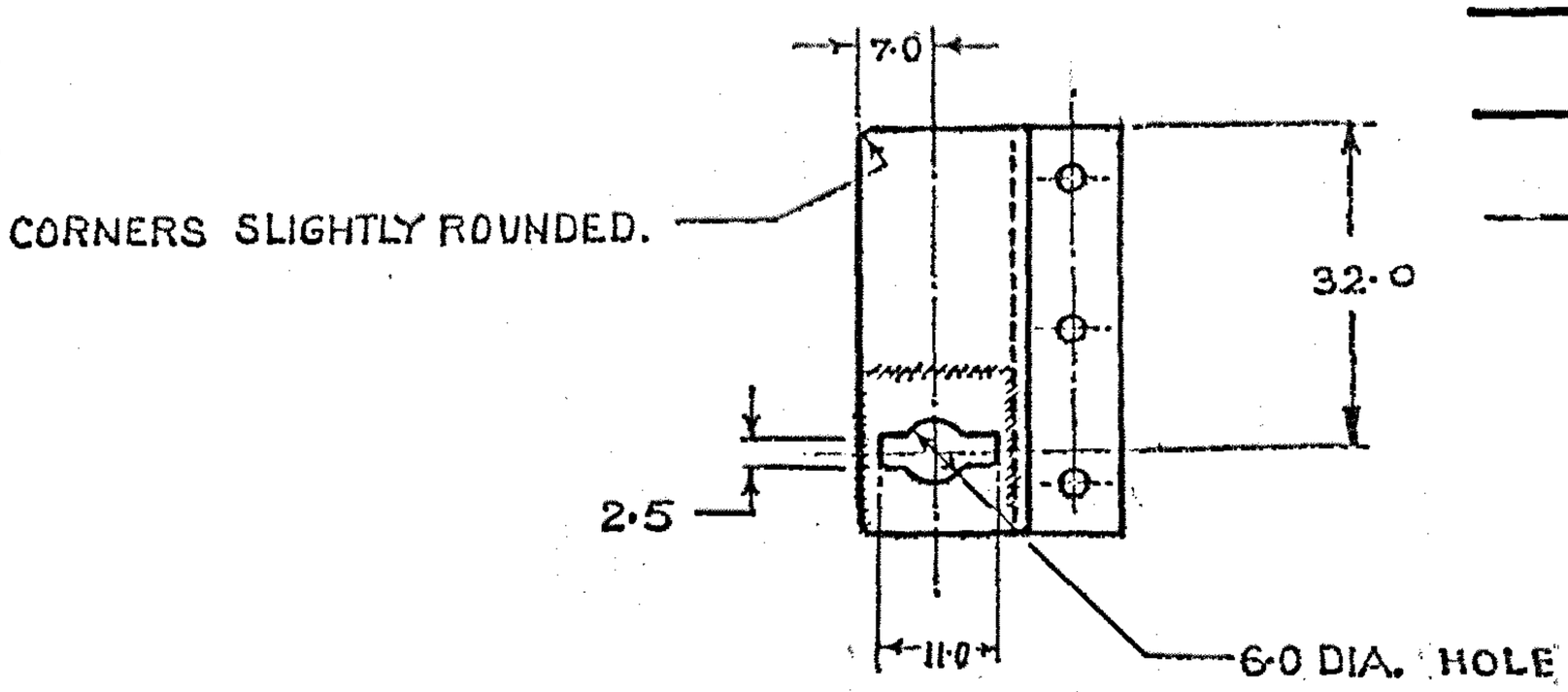

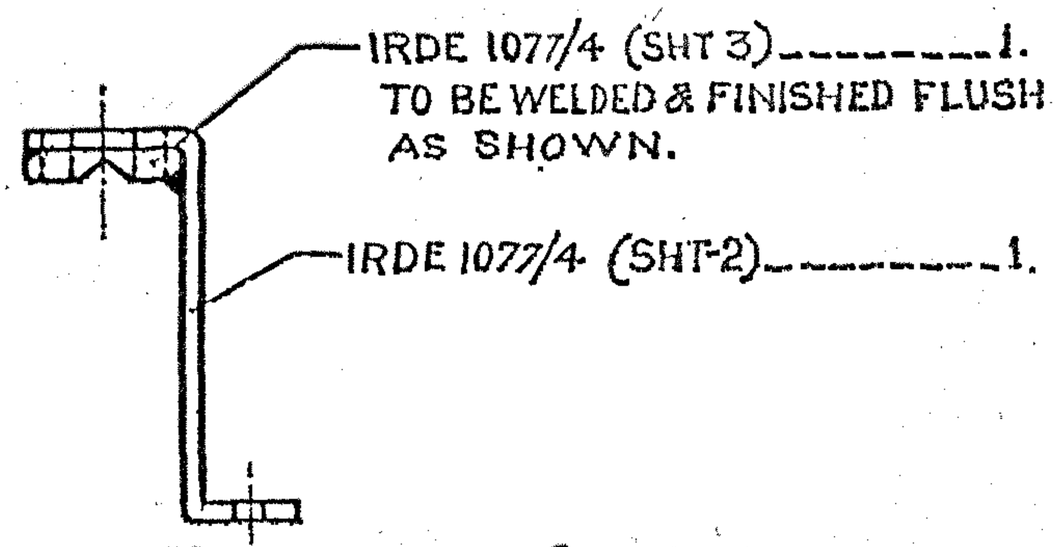

(c)
(e)

FINISH:
1. TO BE RUST PROOFED (PHOSPHATED) TO CLASS A2 TO IS:3618-1966 BEFORE PAINTING.
2. TO BE PAINTED. APPLY PRIMER TO IS:2075-2047 & PAINTED TO IS:8983- (ISC NO.294-OF IS: 5-2007) EXCEPT BEARING SURFACES. AFTER ASSY.

SYM	AMENDMENTS	CHKD	SIG	DATE
	D.C:-6303-I:-DRG. ENDORSED "OBSOLESCENT"			16.11.98
	(c) D.C:-6284-I. FINISH AMENDED.			26.8.98
	(b) D.C.(I):-5519-I. NOM. AMENDED & CAT/PT. No. ADDED.			16.11.91
	(a) D.C.(I):-3700-I:- VIEW AMENDED TO SHOW MODIFIED DRG. No. IRDE 1077/4 (SHT-2)			10-2-78
	D.C.(I):-3349-I. DRG. SEALED.			16.6.76
	D.C.(I):-0872-I (P):- DRG. PROV. SEALED.			1.6.75

MATL & SPECN	SEE SHEETS.
FINISH	AS ABOVE
TITLE	PLUNGER, DETENT

DRN		APPROVED for DIRECTOR
TRCD		IRDE, DEHRADUN
CHKD		Date: 19-4-75
CHKD		
USED ON		
BASED ON		
CAT / PT.No.	5340-007897 (b)	
DRG. No.	IRDE1077/4	
SCALE	1/1	SHT 1 OF 3

(e) D.C:-7224-I. FINISH AMENDED
D.C:-6386-I:- "OBSOLESCENT" CANCELLED.

SIG	DATE
	16-4-19
	23.6.99

AMENDMENTS

POLYESTER NEGATIVE PREPARED AT CQA(I)D.DUN
PREPARED BY:-
CHECKED BY:-
DATE:-

D.C.(I):-0872-I(P), 3349-I, 3700-I, 5519-I, 6284-I, 6303-I, 6386-I. 7224-I,

VETTED BY
OI/C QM...

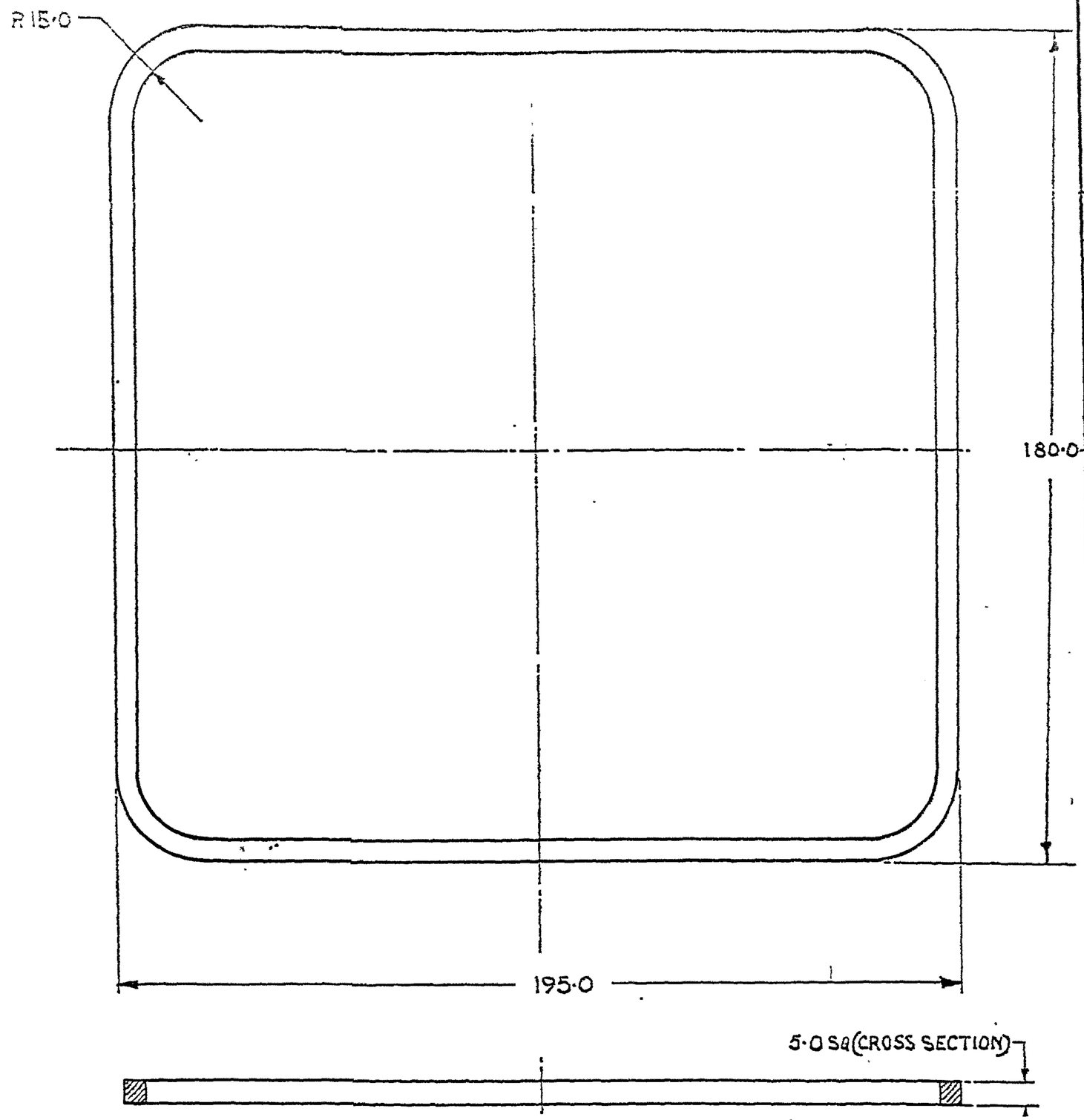

AMENDMENTS	CHD	SIG	DATE
D.C:-6159-I. DRG. REDUCED & NEW COPY SEALED IN SUPERSESSION OF EXISTING ONE			9.10.96
D.C:- 6303-I:- DRG ENDORSED "OBSOLESCENT"			16.11.98
D.C:- 6386-I:- "OBSOLESCENT" CANCELLED.			23/6/99
(a) D.C:-7236-I. MATL. AMENDED.			22/1/20

FOR EXPLANATION OF DIMENSIONING ETC., SEE IDA(1) GUIDE No 001-1992.
THIRD ANGLE PROJECTION
DIMENSIONS ARE IN mm

DRN	Sd/-	APPROVED Sd/- FOR DIRECTOR IRDE D.DUN
TCD	Sd/-	
CHD	Sd/-	
CHD	Sd/-	DATE:-19.4.75

MATL & SPEC:- (a) RUBBER, GRADE Z50 OF IS:5192 (PART-1)-1994

USED ON	
BASED ON	
CAT/FI No.	5330-010878
DRG No.	IRDE-1077/3
SCALE	1 : 1 Sh C

FINISH & SPEC:- CLEAN

TITLE:-

SEAL RUBBER, STRIP

D.C.(1):-0872-I(P), 0883-I(P), 3349-I, 5519-I, 6159-I VETTED BY - ... Ø I/C OH.... 6303-I, 6386-I, 7236-I.

REDUCED DRG. PREPARED AT CDA(I) DEHRA DUN
PREPARED BY : ... DATE:
CHECKED BY : ...

(2B)

FILING CAB

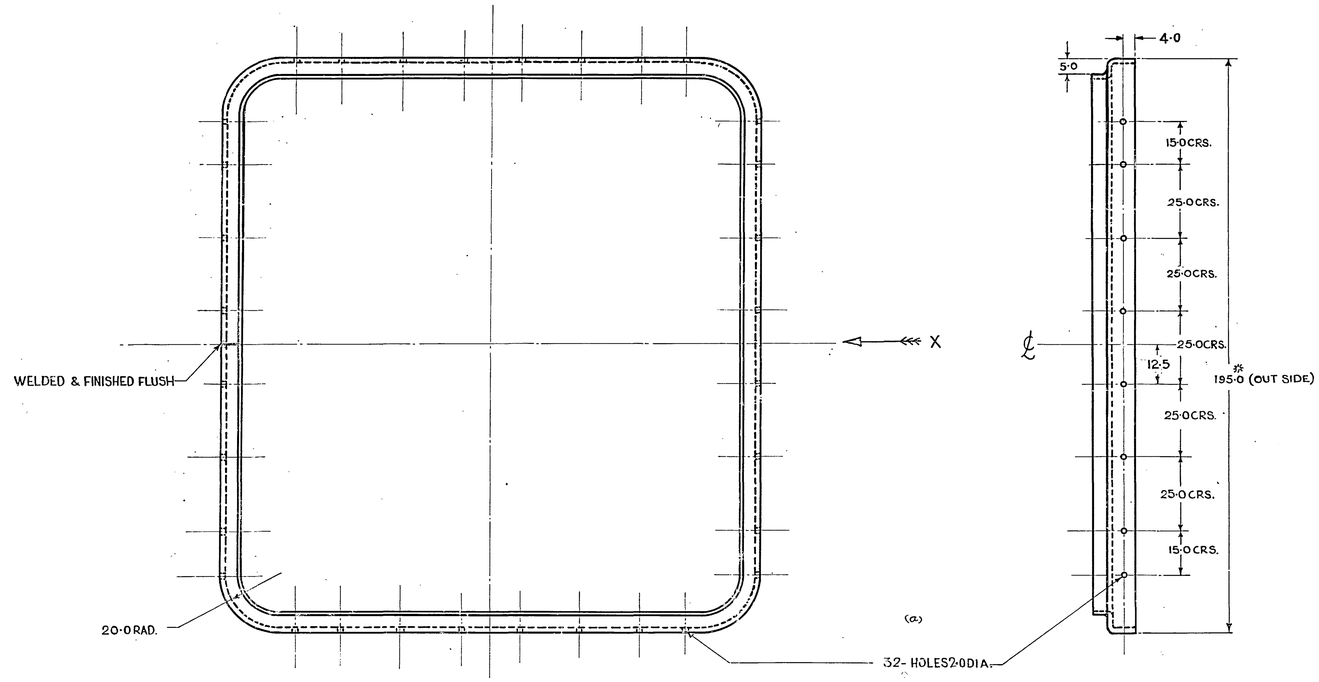

VIEW IN DIRECTION OF ARROW 'X'

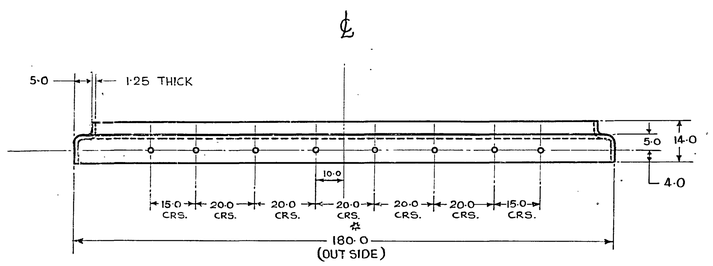

NOTE:-

1. TO BE RUST PROOFED BEFORE PAINTING.
2. DIMENSIONS MARKED WITH ASTERIC TO SUIT IRDE 1077/1 (SHT-1)

FINISH:- TO BE PAINTED TO IS: 8983-1978 (f) (ISC NO-294 OF IS: 5-2007) AFTER ASSEMBLY

(e) MATL & SPEC:- STEEL Gde - ISH410S TO IS: 5986-2017.

SYM	ZONE	AMENDMENTS	CHKD	SIG.	DATE
		D.C.(1):- 0872-I (P):- DRG. PROV. SEALED.			1.6.75
		D.C.(1):-3349-I. DRG. SEALED.			16.6.76
(a)		D.C.(1):-3379-I:-32-HOLES 2·0 DIA. WERE 1·6 DIA.			12.7.76
		(b) D.C.(1):-5519-I. NOM. AMENDED & CAT/PT. No. ADDED.			16.11.91
		(c) D.C.:-6284-I. MATL. AMENDED.			26/8/92
		D.C.:-6303-I.-DRG. ENDORSED "OBSOLESCENT".			11/16/92
		D.C.:-6386-I:- "OBSOLESCENT" CANCELLED.			23/6/93
		(d) DC:7136-I. MATL. AMENDED.			1/17
		(e) DC:7205-I. MATL. AMENDED.			23/7/18
	(f)	D.C.:-7224-I FINISH AMENDED			16/10/19

FOR EXPLANATION OF DIMENSIONING ETC., SEE IRDE NOTE SHEET No1. THIRD ANGLE PROJECTION DIMENSIONS ARE IN MILLIMETRES	DRN.		APPROVED FOR DIRECTOR IRDE DEHRADUN
	TRCD		
	CHKD		
	CHKD		DATE
MATL & SPECN (c) AS ON DRG. ~~STEEL IS:1079/St-42-1073~~ (e) ~~STEEL Fe410 TO IS:1079-1988~~ (d) ~~STEEL Gde 2SS TO IS: 5986-2017~~	USED ON		
	BASED ON		
	CAT/PT No.	5330-010879	(b)
FINISH TO BE PAINTED WITH LATEST APPROVED SERVICE COLOUR AFTER ASSEMBLY.	DRG. No.	IRDE 1077/2	
	SCALE	1/1	SHT OF

(b) RETAINER, PACKING

D.C.(1):- 0872-I(P), 3349-I, 3379-I, 5519-I, 6284-I, 6303-I, 6386-I, 7136-I, 7205-I, 7224-I

FOR EXPLANATION OF DIMENSIONING Etc., SEE CQA(I)GUIDE No.001-1992

THIRD ANGLE PROJECTION — DIMENSIONS ARE IN MILLIMETRES.

(a)

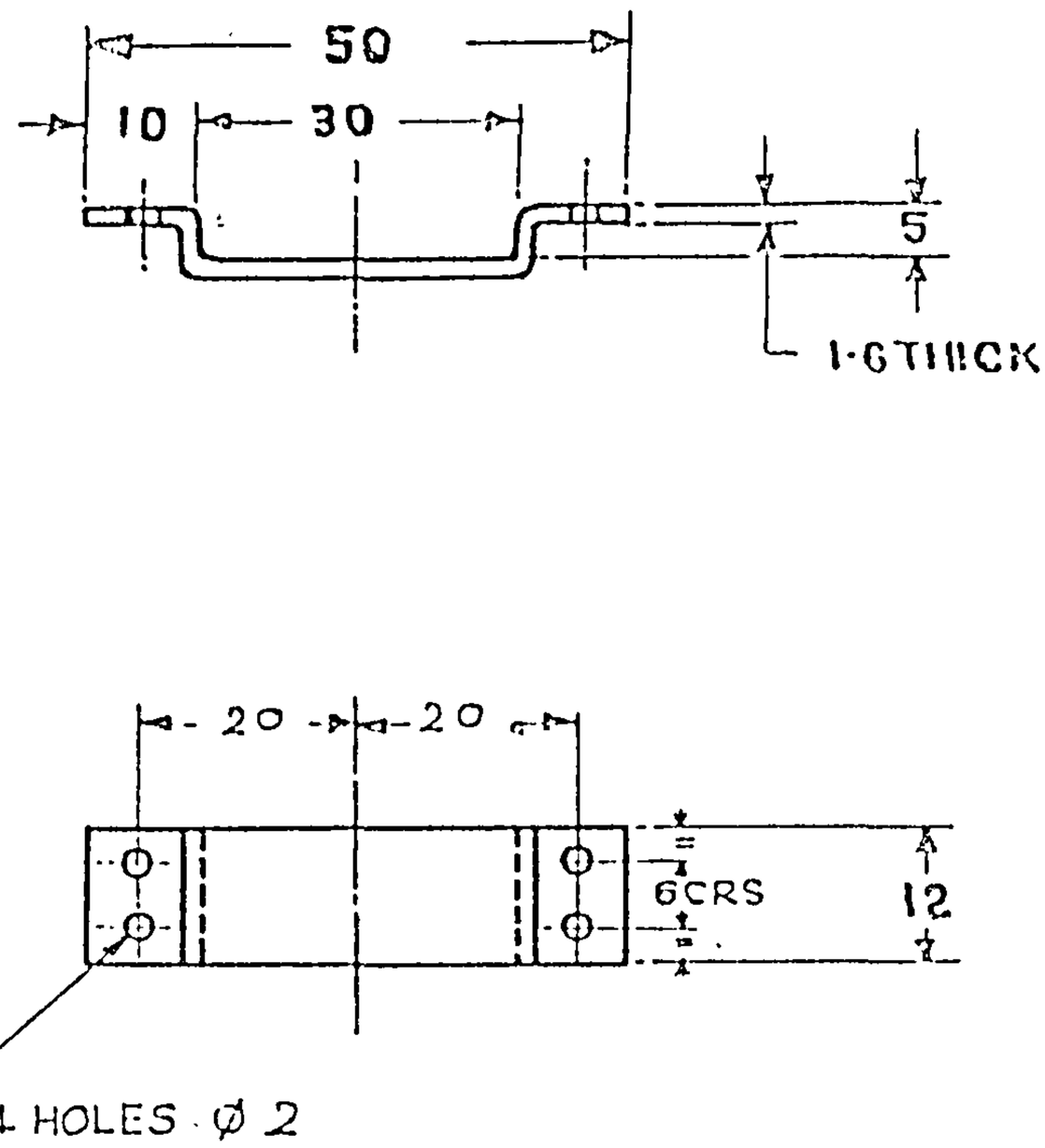

SYM	AMENDMENTS	CHKD	SIG	DATE
	(d) DC:7205-I. MATL. AMENDED.			23 7/18
	(c) DC:-7136-I. MATL. AMENDED			17-1-17
	D.C:-6386-I:- "OBSOLESCENT" CANCELLED.			23 6/99
	DC:-6303-I:- DRG. ENDORSED "OBSOLESCENT."			16.11.98
	(b) D.C(I):- 5519-I. NOM. AMENDED & CAT/PT. No. ADDED			16.11.91
	(a) D.C.(I):-3700-I:- DIMS 20, 20, 6 & NOTE RE-HOLES ADDED. VIEW AMENDED.			10.2.78
	D.C.(I):-3349-I. DRG. SEALED.			16.6.76
	D.C. (I):-0872-I (P):- DRG. PROV. SEALED			1.6.75

MATL & SPECN: STEEL Gde-ISH4105 TO IS:5986-2017 (c) (d)

FINISH: CLEAN

TITLE: BOX METAL, SMALL PARTS

BRACKET

DRN		APPROVED for DIRECTOR IRDE, DEHRADUN Date: 19-4-75
TRCD	A Singh	
CHKD		
CHKD		
USED ON		
BASED ON		
CAT/PT.No.	8115-000644 (b)	
DRG. No.	IRDE 1077/1	
SCALE	1/1	1 - SHT 5 OF 5

POLYESTER NEGATIVE PREPARED AT CQA(I) D.DUN

PREPARED BY:

CHECKED BY:

DATE:

D.C.(I):-0872-I(P) 3349-I, 3700-I, 5519-I, 6303-I. a I/C QM.

6386-I; 7136-I, 7205-I.

VETTED BY...

FOR EXPLANATION OF DIMENSIONING Etc., SEE CQA(I)GUIDE No.001-1992
THIRD ANGLE PROJECTION DIMENSIONS ARE IN MILLIMETRES.

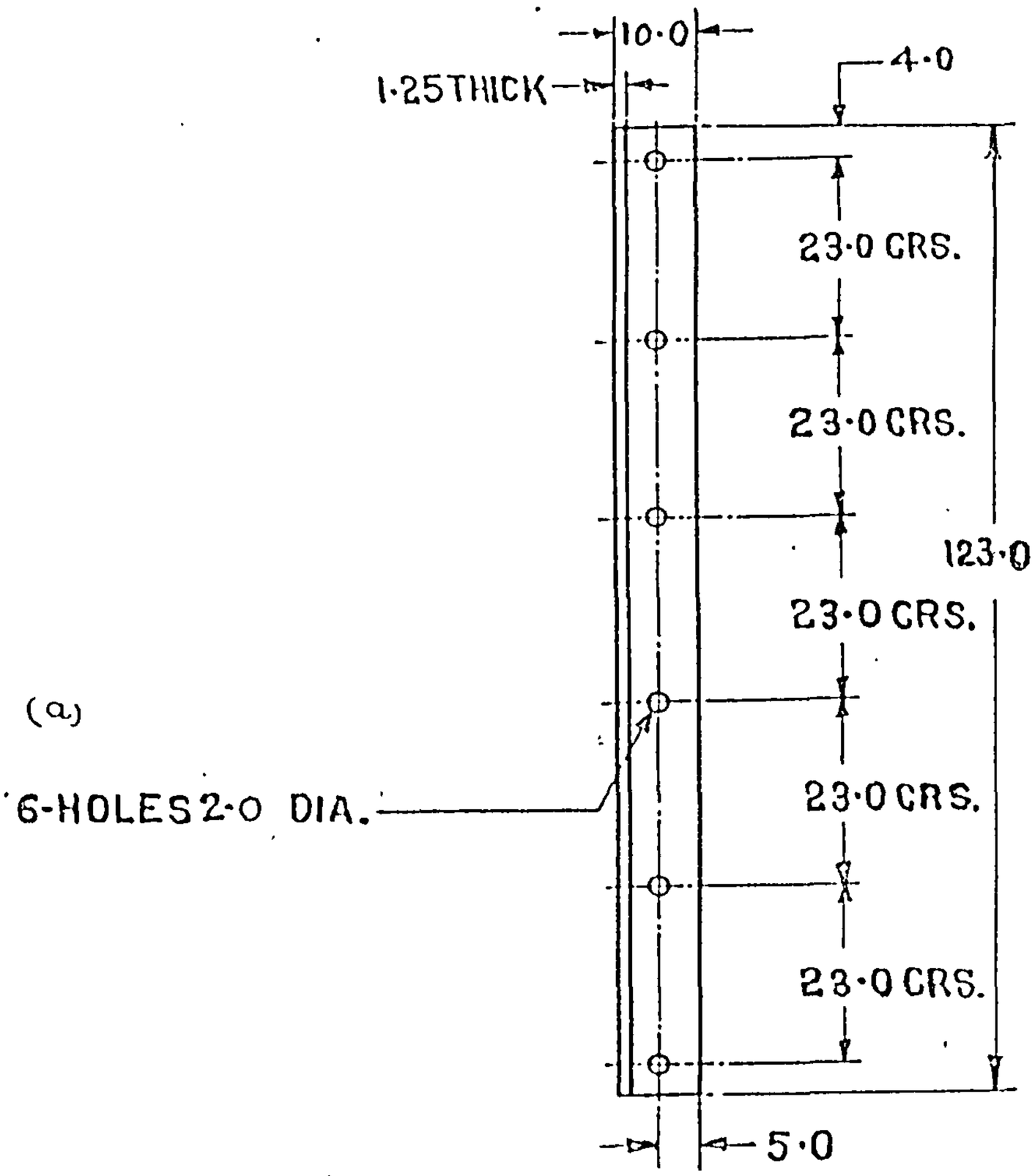

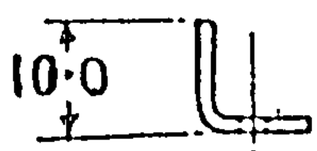

SYM	AMENDMENTS	CHKD	SIG	DATE
	D.C:-6386-I:- "OBSOLESCENT" CANCELLED.			23.6.99
	D.C:-6303-I:- DRG. ENDORSED "OBSOLESCENT."			16.11.98
	(b) D.C(I):-5519-I., NOM. AMENDED & CAT/PT. No. ADDED.			16.11.91
	(a) D.C.(I)-3379-I:- 6-HOLES 2·0 DIA. WERE 1·6 DIA.			12.7.76
	D.C.(I):-3349-I. DRG. SEALED.			16.6.76
	D.C.(I):-0872-I (P):- DRG. PROV. SEALED.			1.6.75

SYM	AMENDMENTS	CHKD	SIG	DATE
	(d) DC: 7205-I. MATL. AMENDED			23-7-18
	(c) DC:- 7136-I. MATL AMENDED			17-1-2017

ANGLE

DRN		APPROVED for DIRECTOR IRDE, DEHRADUN Date: 19-4-75
TRCD		
CHKD		
CHKD		
USED ON		
BASED ON		
CAT / PT.No.	8115-000644 (b)	
DRG. No.	IRDE 1077/1	
SCALE	:-1/1	SHT 4 OF 5

MATL & SPECN: STEEL Gde:- IS:4105 TO IS:5986-2017 (c) (d)

FINISH: CLEAN

TITLE
BOX METAL, SMALL PARTS

D.C.(I):-0872-I(P), 3349-I, 3379-I, 5519-I.
6303-I, 6386-I, 7136-I, 7205-I

VETTED BY: I/C QM

POLYESTER NEGATIVE PREPARED AT CQA(I) D.DUN
PREPARED BY:
CHECKED BY:
DATE:-

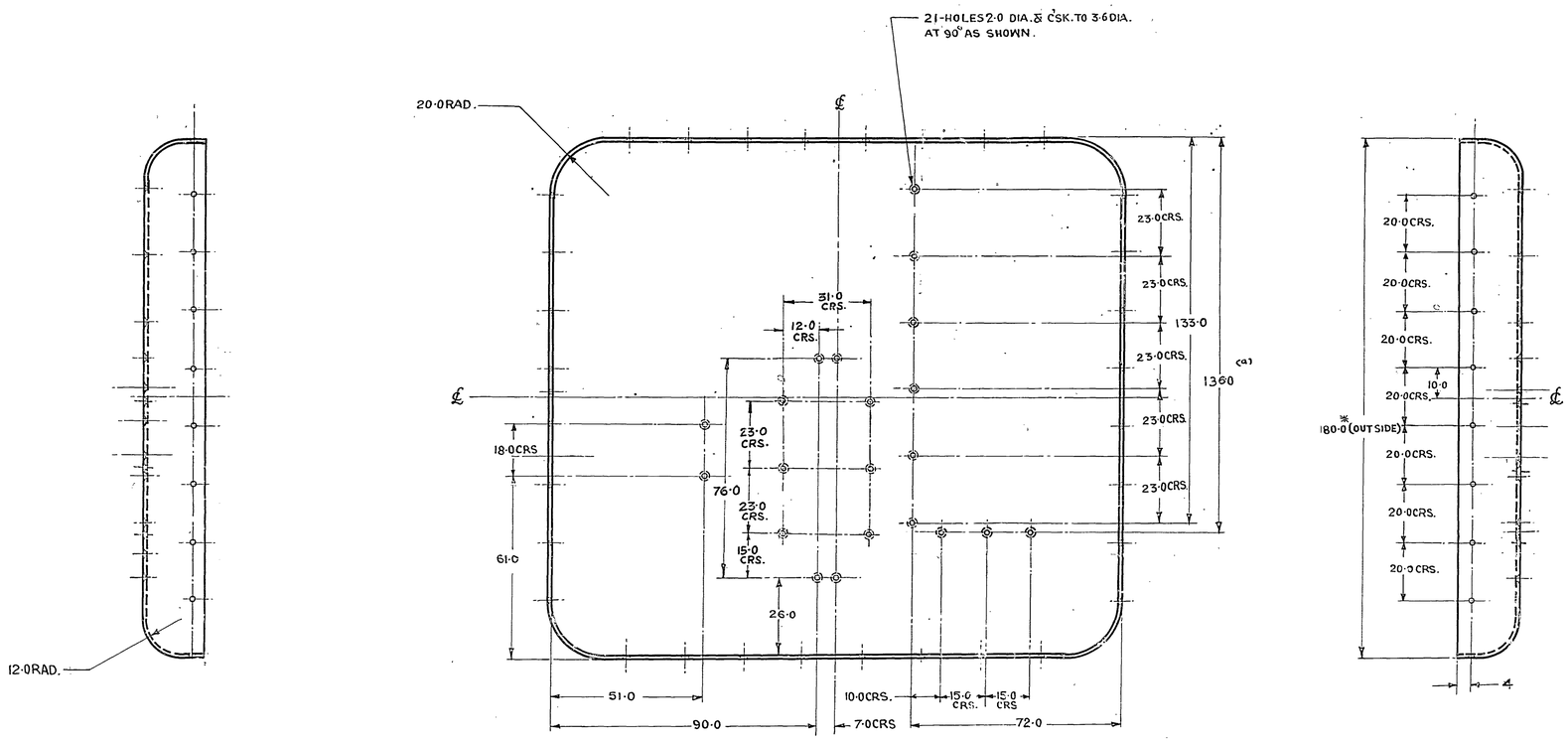

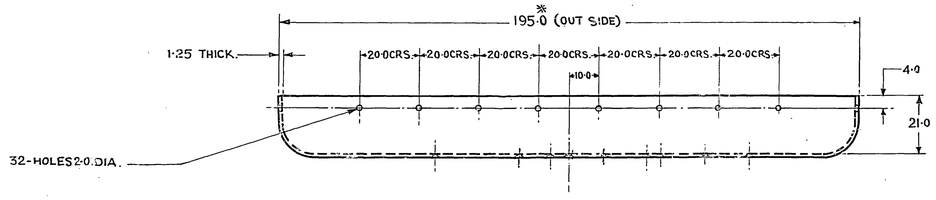

NOTE:-
DIMENSIONS MARKED WITH ASTERIC TO SUIT IRDE 1077/1 (SHT-2)

(a)
MATL & SPEC:- STEEL Gde- ISH 410S TO IS:5986-2017.

BASE

(b)
BOX METAL, SMALL PARTS

SYM	ZONE	AMENDMENTS	CHKD	SIG	DATE
		D.C. (1):- 0872-I (P):- DRG. PROV. SEALED.			1/6/75
		D.C. (1):- 3349-I. DRG. SEALED.			16/6/76
		D.C. (1):- 3379-I:- HOLES 2·0 DIA. WERE 1·6 DIA. & NEW COPY SEALED IN SUPERSESSION, OF EXISTING ONE.			12/7/76
		(a) D.C. (1):- 3700-I. DIM. 136·0 WAS 144·0 & VIEW AMENDED.			10/2/78
		(b) D.C. (1):- 5519-I. NOM. AMENDED & CAT/PT. No. ADDED.			16/11/81
		(c) D.C.:- 6284-I. MATL. AMENDED			28/8/82
		D.C:- 6303-I:- DRG. ENDORSED "OBSOLESCENT"			14/11/78
		D.C:- 6386-I:- "OBSOLESCENT" CANCELLED.			22/6/83
		(d) DC: 7136-I (P). MATL. AMENDED.			17/1/17
		(e) DC: 7265-I. MATL. AMENDED.			23/7/18

FILING CAB

FOR EXPLANATION OF DIMENSIONING ETC, SEE IRDE NOTE SHEET NO. 1
THIRD ANGLE PROJECTION
DIMENSIONS ARE IN MILLIMETRES.

DRN		APPROVED
TRCD		FOR DIRECTOR IRDE DEHRADUN.
CHKD		DATE:- 19-4-75
CHKD		
USED ON		
BASED ON		
CAT/PT. NO.		8115-000644 (b)
DRG. NO.		IRDE 1077/1
SCALE	1/1	SHT 3 OF 5

MATL & SPECN. ~~STEEL Gde 2 SS TO IS: 5986-2017~~ (c) (d) (e)
~~STEEL IS:1079/St-42-1079~~
~~STEEL Fe 410 TO IS:1079 - 1988~~

FINISH:-
CLEANED.

D.C. (1):- 0872-I (P), 3349-I, 3379-I, 3700-I, 5519-I, 6284-I, 6303-I, 6386-I, 7136-I, 7265-I.

(2B)

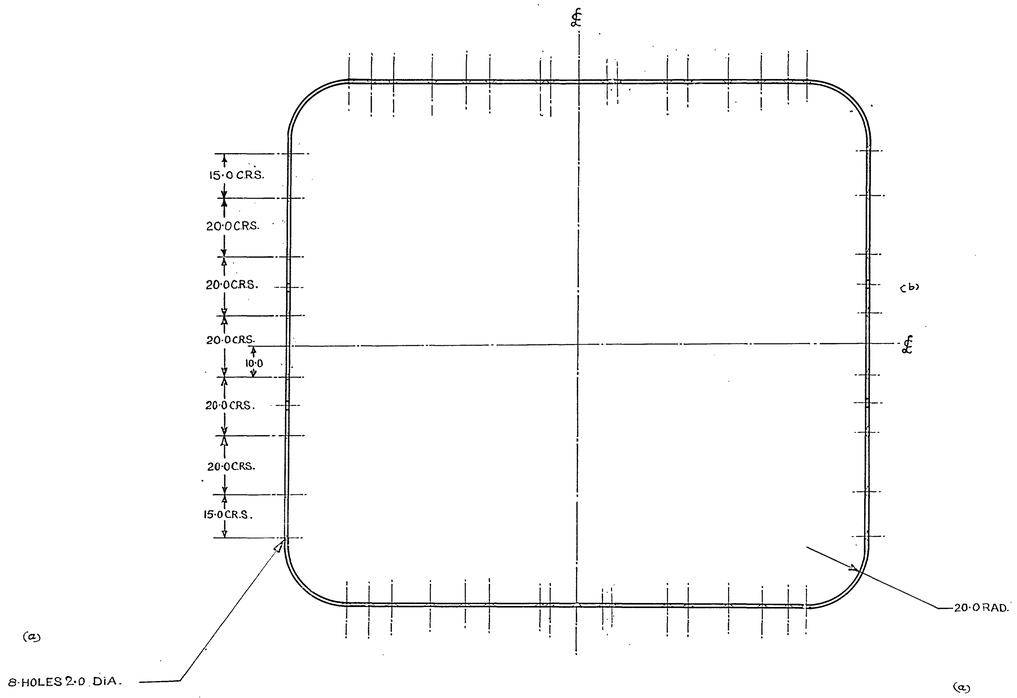

(a)

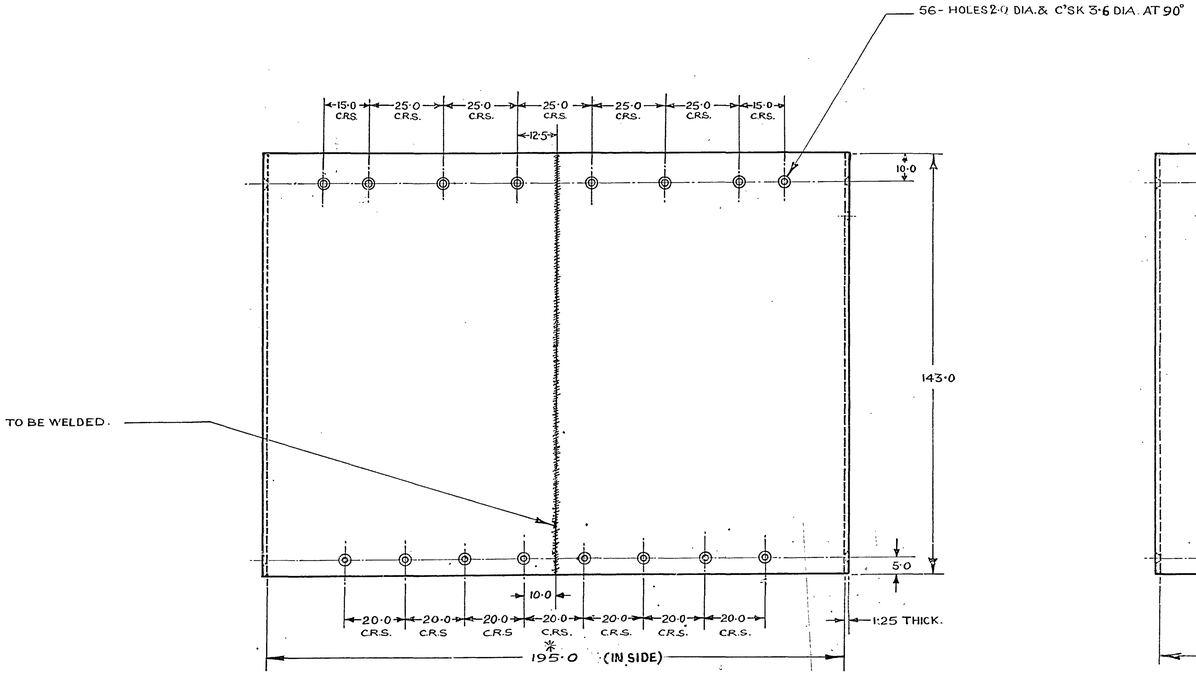

(b)

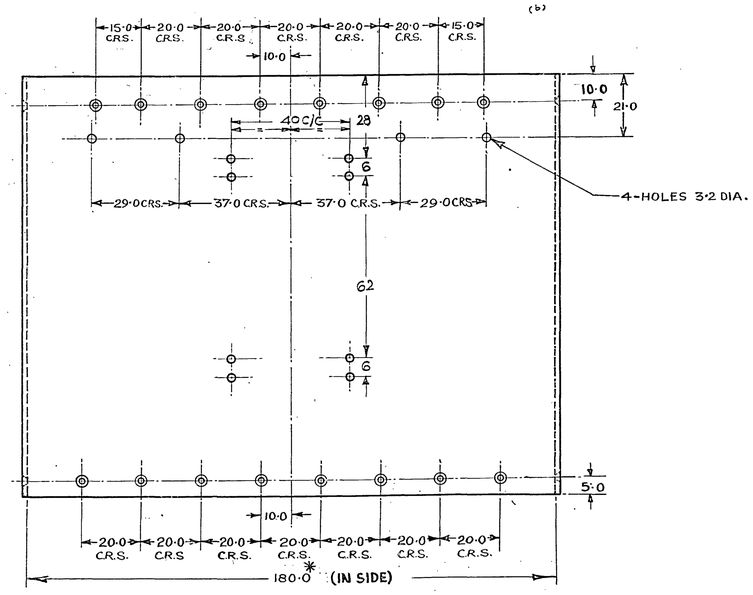

(f)
MATL & SPEC:- STEEL Gde - ISH 4105 TO IS:5986-2017

NOTE:-
DIMENSIONS MARKED WITH ASTERIC TO SUIT IRDE 1077/1 (SHT.3)

BODY

(c)
BOX METAL, SMALL PARTS

SYM	ZONE	AMENDMENTS	CHKD	SIG.	DATE
		D.C.(1):- 0872-I (P):- DRG. PROV. SEALED.	W		1.6.67
		D.C. (1):- 3349-I. DRG. SEALED.	W		16.6.67
(a)		D.C.(1):- 3379-I:- HOLES 2·0 DIA WERE 1·6 DIA. & C'SK 3·6 DIA. WAS 3·2 DIA.	W		12.7.71
(b)		D.C.(1):- 3700-I. VIEW AMENDED TO SHOW 8-HOLES TO SUIT IRDE 1077/1 (SHT-5), DIM. 28, 40 C/C, 6, 62 & 6 ADDED.	W		10.2.73
		(c) D.C.(1):- 5519-I. NOM. AMENDED & CAT/PT. No. ADDED.	W		16.11.73
		(d) D.C.:- 6284-I. MATL. AMENDED.	W		26.8.74
		D.C:- 6303-I:- DRG. ENDORSED "OBSOLESCENT."	W		11.6.74
		D.C:- 6386-I:- "OBSOLESCENT" CANCELLED.	W		23.1.74
		(e) DC: 7136-I. MATL. AMENDED			17.7.74
		(f) DC: 7205-I. MATL. AMENDED.			23.7.75

D.C. (1):- 0872-I (P), 3349-I, 3379-I, 3700-I, 5519-I, 6284-I, 6303-I, 6386-I, 7136-I, 7205-I.

FOR EXPLANATION OF DIMENSIONING ETC., SEE IRDE NOTE SHEET No. 1 THIRD ANGLE PROJECTION. DIMENSIONS ARE IN MILLIMETERS.	DRN.		APPROVED
	TRCD		FOR DIRECTOR IRDE DEHRADUN
	CHKD.		
	CHKD.		DATE:- 19-4-75
MATL & SPECN. (d) (f) ~~STEEL, IS:1079/St-42-1079~~ STEEL Fe 410 TO IS:1079-1988 (e) (f) ~~STEEL Gde 235 TO IS:226-1975~~ AS ON DRG.	USED ON		
	BASED ON		
	CAT/PT. No.	8115-000644 (c)	
FINISH:- CLEANED	DRG. No.	IRDE 1077/1	
	SCALE	1/1	SHT-2 OF 5

FILING CAB

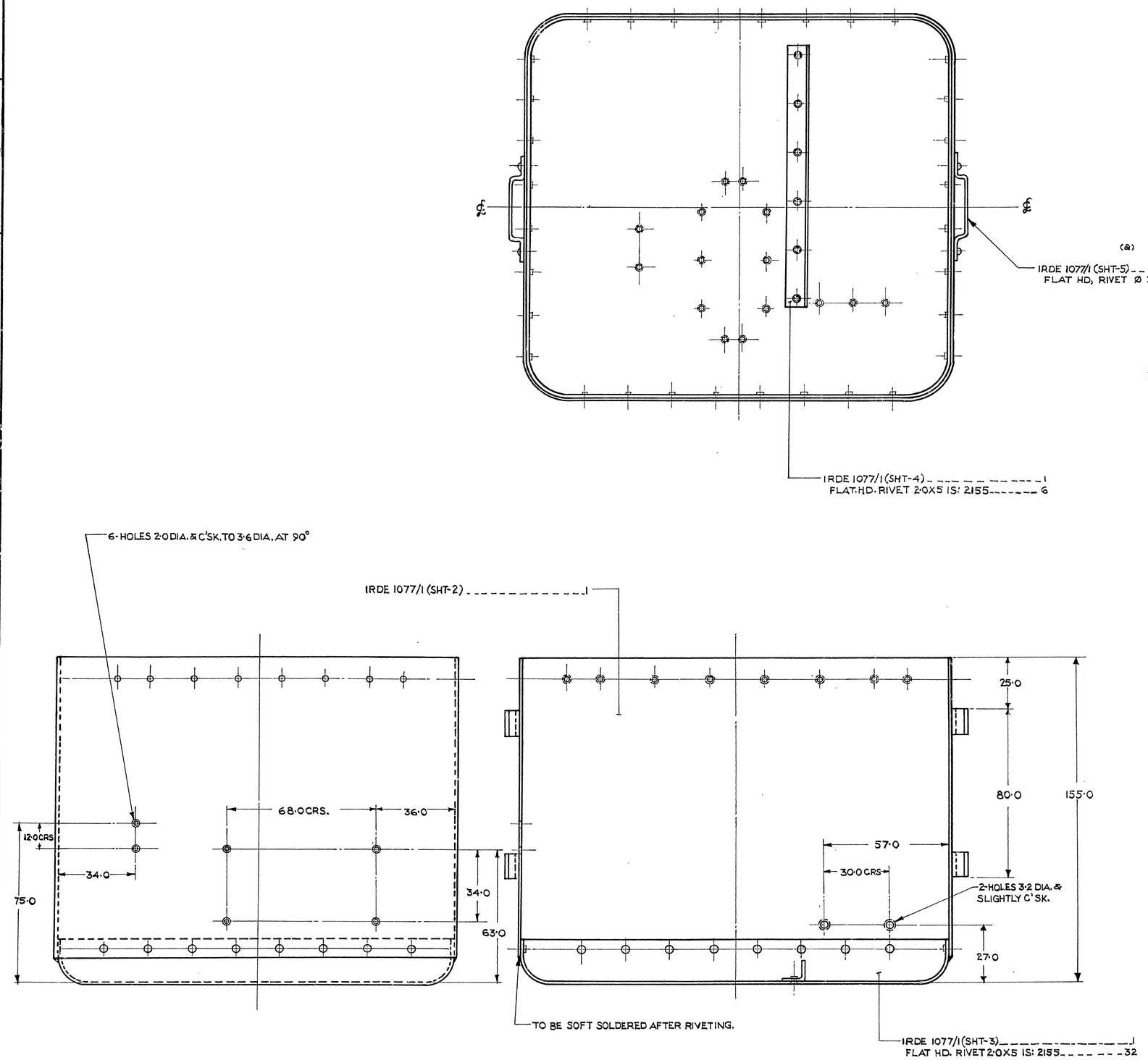

(c)
(d)
FINISH:-
(1) TO BE RUST PROOFED (PHOSPHATED) TO CLASS A2 TO IS: 3618-1966 BEFORE PAINTING.
(2) TO BE PAINTED APPLY PRIMER TO IS:2075-2017 & PAINTED TO IS: 8983-1978 (ISC-294 OF IS: 5-2007) EXCEPT BEARING SURFACES AFTER ASSEMBLY.

SYM.	ZONE	AMENDMENTS	CHKD	SIG.	DATE
		D.C.(I):- 0872-I(P):- DRG. PROV. SEALED.		Sd/-	1.6.75
		D.C.(I):- 3349-I:- DRG. SEALED.		Sd/-	16.6.76
		D.C.(I):- 3379-I:- HOLES & RIVETS 2·0 Ø WERE 1·6 DIA & NEW COPY SEALED IN SUPERSESSION OF EXISTING ONE.		Sd/-	12.2.76
		(a) D.C.(I):- 3700-I:- HOLES POSITION TO SUIT IRDE 1077/4 SHIFTED NOTE RE-WELDING DELETED & RIVETS ADDED.		Sd/-	10.2.78
		(b) D.C.(I):- 5519-I. NOM. AMENDED & CAT/PT. NO. ADDED.			16-11.91
		(c) D.C:- 6284-I. FINISH AMENDED.			26.8.92
		D.C:- 6303-I:- DRG. ENDORSED "OBSOLESCENT."			16.11.92
		D.C:- 6386-I:- "OBSOLESCENT" CANCELLED.			23.6.99
	(d)	D.C:- 7224-I FINISH AMENDED.			16-4-19

FOR EXPLANATION OF DIMENSIONING ETC., SEE IRDE NOTE SHEET No. 1
THIRD ANGLE PROJECTION
DIMENSIONS ARE IN mm.

DRN.	Sd/-	APPROVED Sd/- FOR DIRECTOR IRDE, DEHRA DUN
TRCD.	Sd/-	
CHKD	Sd/-	
CHKD		DATE 1-19-4-75
USED ON		
BASED ON		
CAT/PT. No.	8115-000644 (b)	
DRG. No.	IRDE 1077/1	
SCALE	1/1	SHT 1 OF 5

MATL & SPECN SEE SHEETS

~~FINISH:- TO BE RUST PROOFED BEFORE PAINTING. TO BE PAINTED WITH 1 COAT APPROVED SERVICE COLOUR EXCEPT BEARING SURFACES AFTER ASSY.~~

2 SEE ABOVE

(b)

BOX METAL, SMALL PARTS

TRACED AT CM, DEHRA DUN
TRACED BY:- CS CS/SUK 3/2
CHECKED BY:-
DATE:- 2.4.1983

D.C.(I):- 0872-I(P), 3349-I, 3379-I, 3700-I, 5519-I, 6284-I, 6303-I, 6386-I, 7224-I

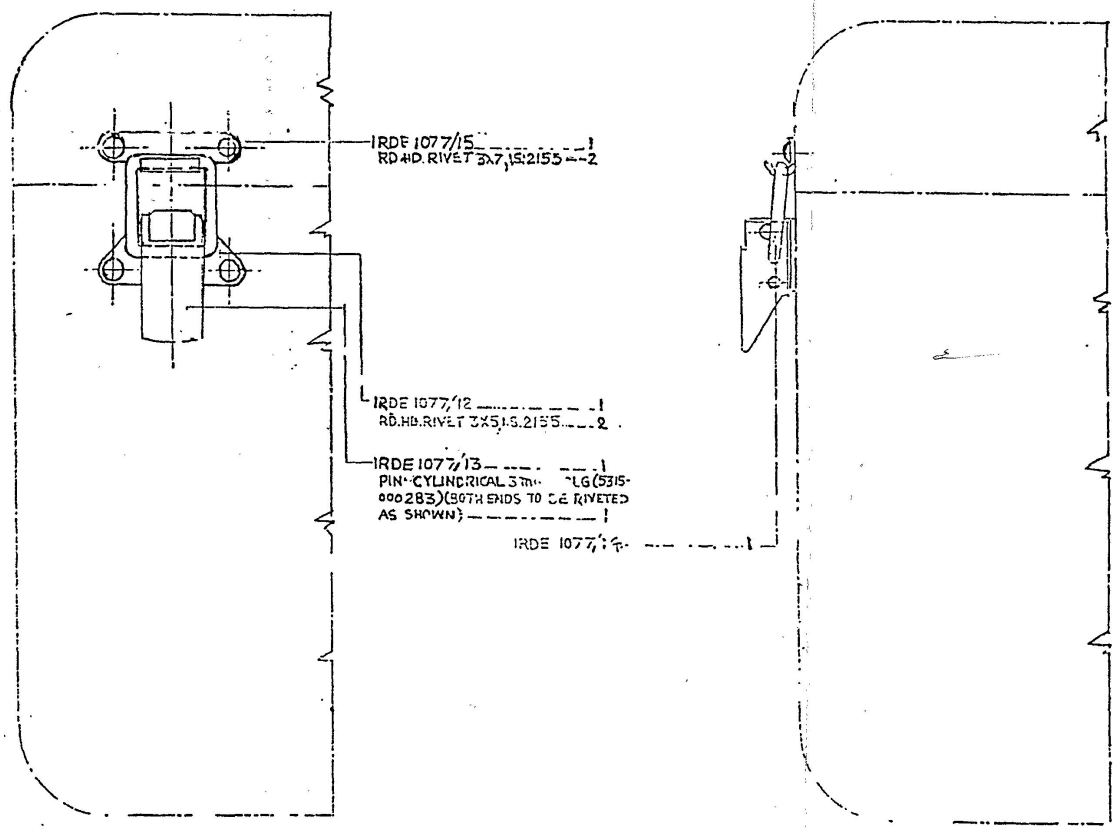

NOTE:-
IRDE 1077/12 TO BE WELD AFTER RIVETING.

AMENDMENTS	CHD	SIG	DATE
DC:-6088-I:- DRG. REDUCED & NEW COPY SEALED IN SUPERSESSION OF EXISTING ONE.			12.2.96
D.C:- 6303-I:- DRG. ENDORSED "OBSOLESCENT"			16.11.98
D.C:- 6386-I:- "OBSOLESCENT" CANCELLED.			23.6.99

FOR EXPLANATION OF DIMENSIONING ETC, SEE CQA (I) GUIDE No 001-1992.
THIRD ANGLE PROJECTION
DIMENSIONS ARE IN mm

MATL & SPEC:-
AS ON DETAILS

FINISH & SPEC:-
AS ON DETAILS

DRN
ICD
CHD
CHD
MSCD
ON
BASED ON
CAT/PT No. 5975-001028
DRG No. IRDE 1077/SA4
SCALE : SH OF

APPROVED
sd -
FOR DIRECTOR
IRDE, DEHRA DUN
DATE: 17.4.75

VETTED BY ...
DATE ON 1 ...

D.C.(I):-0872-I(P), 3849-I, 5519-I, 6088-I.
6303-I, 6386-I

REDUCED LRG. PREPARED AT CQA(I) DEHRA DUN
PREPARED BY : DATE:
CHECKED BY : DATE:

FASTENER, CORD ASSEMBLY

D.C.(I):- 0872-I(P), 3349-I, 5519-I, 6159-I.
6284-I, 6303-I, 6386-I.

VETTED BY :
& I/C QM :

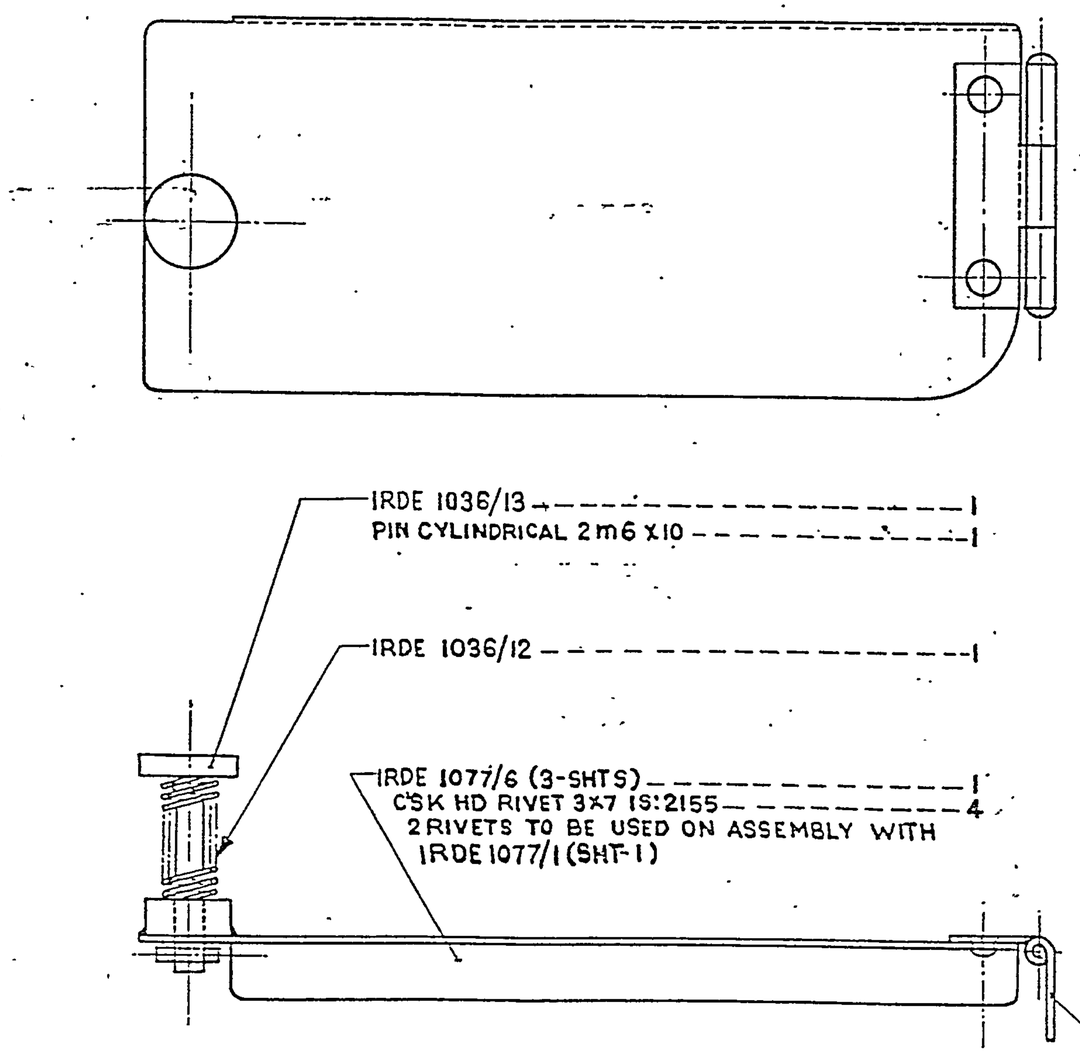

(a)

NOTE:- HINGE TO BE PAINTED, APPLY PRIMER TO IS: 2075-1962 & PAINTED TO IS:8983-1978 (ISC-294 OF IS:5-1978) AFTER ASSEMBLY.

AMENDMENTS	CHD	SIG	DATE
D.C:-6159-I.DRG. REDUCED & NEW COPY SEALED IN SUPERSESSION OF EXISTING ONE			9.10.98
(a) D.C:-6284-I. NOTE AMENDED.			26.8.98
D.C:-6303-I:- DRG. ENDORSED "OBSOLESCENT."			16.11.98
D.C:-6386-I:- "OBSOLESCENT" CANCELLED.			23 6/99

FOR EXPLANATION OF DIMENSIONING ETC, SEE CQA(I) GUIDE No 001-1992.
THIRD ANGLE PROJECTION
DIMENSIONS ARE IN mm

DRN	Sd/-	APPROVED Sd/- FOR DIRECTOR IRDE D.DUN
TCD	Sd/-	
CHD	Sd/-	
CHD	Sd/-	DATE:- 19.4.75

MATL & SPEC:-
SEE DETAILS

USED ON	
BASED ON	
CAT/PT No.	6135-000252
DRG No.	IRDE-1077/SA5
SCALE 1 : 1	SH OF

FINISH & SPEC:-
SEE DETAILS

REDUCED DRG. PREPARED AT: CQA(I) DEHRA DUN
PREPARED BY : Sd/-
CHECKED BY : Sd/-
DATE:

TITLE:-

COVER, BATTERY RETAINER

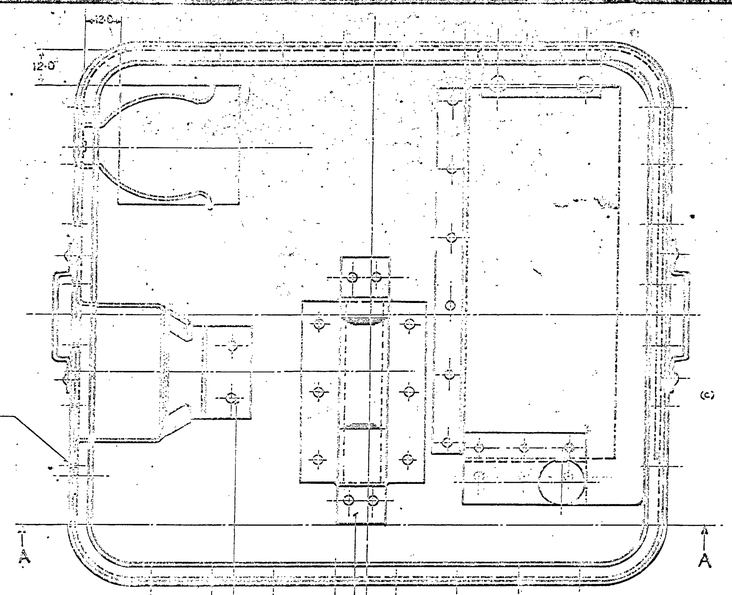

6-HOLES TO BE LEFT BLANK TO SECURE IRDE 1077/9

(a)
IRDE 1077/1 (5-SHTS.) — 1
FLAT HD. RIVET 2·0 X 5 IS: 2155 — 6

(a)
IRDE 1077/13 (4-SHTS) — 1
FLAT HD. RIVET 2·0 X 5 IS: 2155 — 10

(a)
IRDE 1077/2 — 1
FLAT HD. RIVET 2·0 X 5 IS: 2155 — 24

IRDE 1077/1 (5-SHTS.) — 1

(a)
IRDE 1077/5 — 1
FLAT HD. RIVET 2·0 X 5 IS: 2155 — 2

RUBBER SYNTHETIC OIL RESISTANT 40 WIDE X 40 LG. X 2 THICK (IND./TC 2437) — 1
(TO BE GLUED IN POSITION AS SHOWN.)

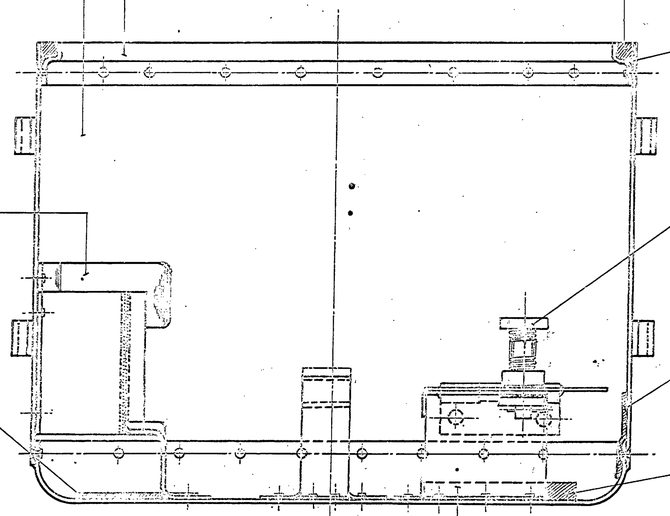

IRDE 1077/3 — 1
(TO BE GLUED IN POSITION AS SHOWN.)

TO BE SOLDERED AFTER RIVETING.

IRDE 1077/SA-5 — 1

RUBBER SYNTHETIC OIL RESISTANT 30 WIDE X 130 LG. X 1 THICK (IND./TC 2437) — 1
(TO BE GLUED IN POSITION AS SHOWN.)

(b)
RUBBER SYNTHETIC OIL RESISTANT 50 WIDE X 130 LG. X 3 THICK (IND./TC 2437) — 1
(TO BE GLUED IN POSITION AS SHOWN.)

(a)
IRDE 1077/4 (3-SHTS) — 1
FLAT HD. RIVET 2·0 X 5·0 IS: 2155 — 3

SECTION AT 'AA'

D.C. (1):- 0072-I (P), 3349-I, 3379-I, 3578-I, 3700-I, 3797-I, L19-1, 6303-I, 6386-II.

REV	ZONE	AMENDMENTS	CHKD	SIG	DATE
		D.C.(1):- 0072-I (P) DRG. PROV. SEALED.	W		11.6.73
		D.C.(1):- 3349-I:- DRG. REVISED AND SEALED IN SUPERSESSION OF EXISTING PROVISIONALLY SEALED DRG.	W		16/6/76
(a)		D.C.(1):- 3379-I:- RIVETS 2·0 DIA. WERE 1·6 DIA.		L	12.7.76
(c)		D.C.(1):- 3578-I:- RUBBER SYNTHETIC — 3 THICK WAS 1·5 THICK.	W	L	2.6.77
(b)		D.C.(1):- 3700-I:- VIEW AMENDED TO SUIT IRDE 1077/4 & IRDE 1077/1.	W		10.2.78
(a)		D.C.(1):- 3797-I:- VIEW AMENDED TO SHOW RUBBER	W		14.8.78
		(a) D.C.(1):- 3519-I. NOM. AMENDED & CAT/PT. No. ADDED.			16/11/81
		D.C.:- 6303-I:- DRG. ENDORSED "OBSOLESCENT."			16/11/88
		D.C.:- 6386-II:- "OBSOLESCENT" CANCELLED.			23/6/88

FOR EXPLANATION OF DIMENSIONING ETC., SEE IRDE NOTE SHEET NO. 1
THIRD ANGLE PROJECTION.
DIMENSIONS ARE IN MILLIMETERS

MAT'L & SPECN.
SEE DETAILS.

FINISH
SEE DETAILS

DRN
TRCD
CHK
CHKD
DATE — 19-4-75
APPROVED
FOR DIRECTOR IRDE DEHRADUN

USED ON
BASED ON
CAT/PT.No. 7125-000078
ORG. NO. IRDE 1077/5
SCALE 1/1

BOX, ASSEMBLY, STORAGE METAL, CASE CARRYING ASSEMBLY

D.C.(I):- 0020-I(P), 1677-I, 3097-I, 3472-I, 5518-I, POLYESTER NEGATIVE PREPARED AT CQA(I)D.DUN
7205-I. 7224-I

PREPARED BY:- DATE:-
CHECKED BY:-

FOR EXPLANATION OF DIMENSIONING ETC., SEE CQA(I)GUIDE No.001-1992, THIRD ANGLE PROJECTION. DIMENSIONS ARE IN MILLIMETRES

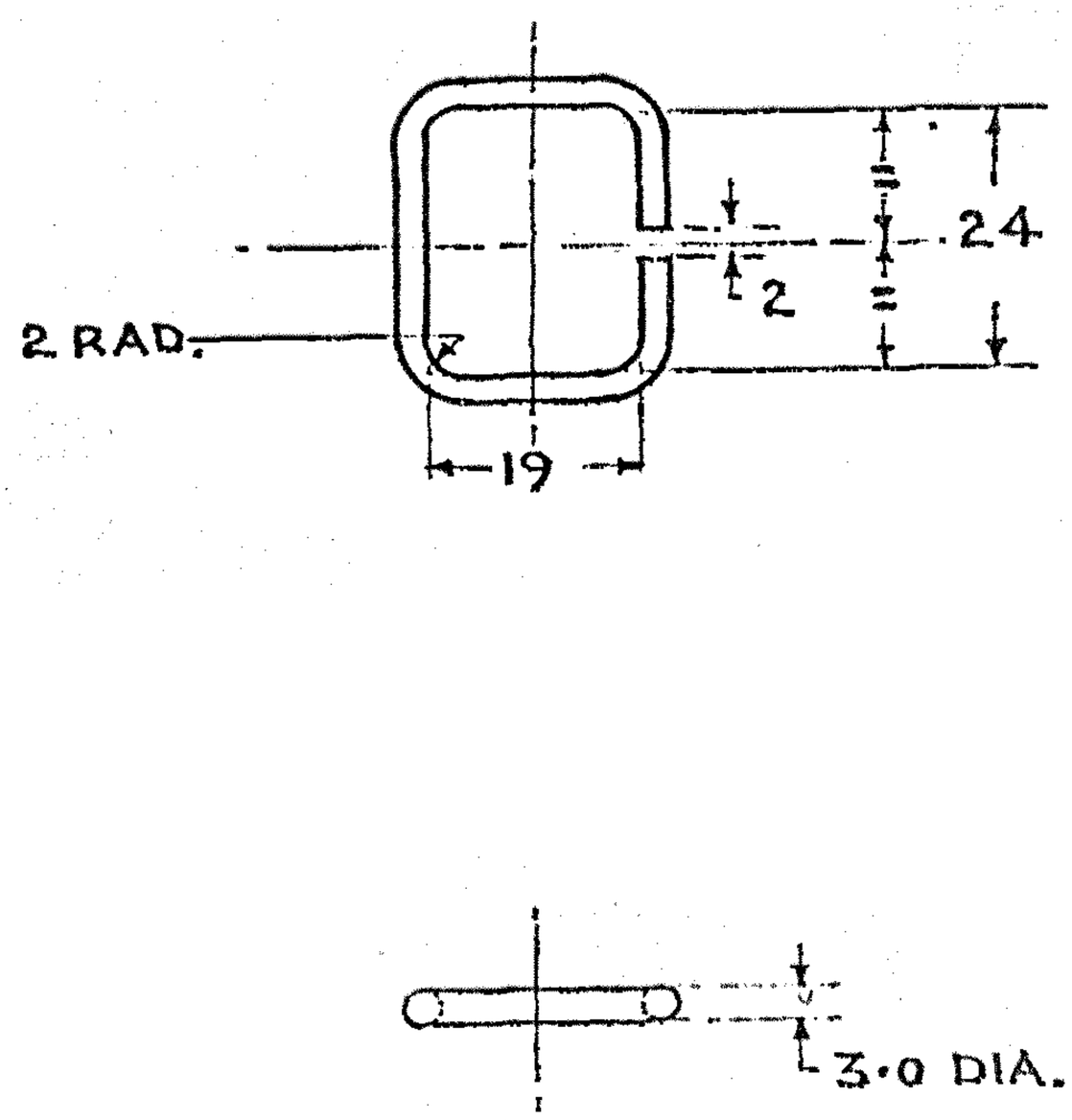

FINISH:- APPLY PRIMER TO IS:2075-2017 & PAINTED AS PER IS:8983-(e) 1978 (ISC NO-294 OF IS:5-2007) EXCEPT BEARING SURFACES.

NOTE:-TO BE (RUST PROOFED) PHOSPHATED CLASS 'B' OF IS:3618-1966 BEFORE PAINTING

AMENDMENT	SIG	DATE
(e) D.C:-7224-I FINISH AMENDED		16-4-19
(d) DC:7205-I. MATL. AMENDED.		23-7-18
(c) D.C.(I):-5518-I/- NOM. AMENDED & CAT/PT. No. ADDED.		12.11.91
(b) D.C.(I):- 3472-I. MATL. SPEC. AMENDED.	Sd/-	20.10.76
(a) D.C.(I):- 3097-I. MATL. SPEC. AMENDED.	Sd/-	29.7.75
D.C.(I):- 1677-I. DRG. SEALED.	Sd/-	15.11.67
D.C.(I):- 0020-I (P). DRG. PROVISIONALLY SEALED.	Sd/-	5.4.63

MATL & SPECN	M.S. Gde DESIG - E 250, QUALITY - BR OF IS:2062-2011 (a) (b) (d)
FINISH SEE ABOVE *	APPLY PRIMER TO IS: 2075-1962 & PAINTED AS PER IS:8983-1978 (ISC 294 OF IS:5-1978) EXCEPT BEARING SURFACES

LOOP, STRAP FASTENER

DRAWN	TRACED	APPROVED
Sd/-	Sd/-	Sd/-
CHECKED		FOR DIRECTOR IRDE DEHRADUN
Sd/-	Sd/-	

SCALE:- 1:1 DATE:-1.4.63

DRG. No. IRDE 111/16

CAT./PART No. (c) 5340-007902

SHEETS SHEET

VETTED BY:- J/C QM

FOR EXPLANATION OF DIMENSIONING ETC., SEE CQA(I)GUIDE No.001-1992 .
THIRD ANGLE PROJECTION DIMENSIONS ARE IN MILLIMETER.

(5F)

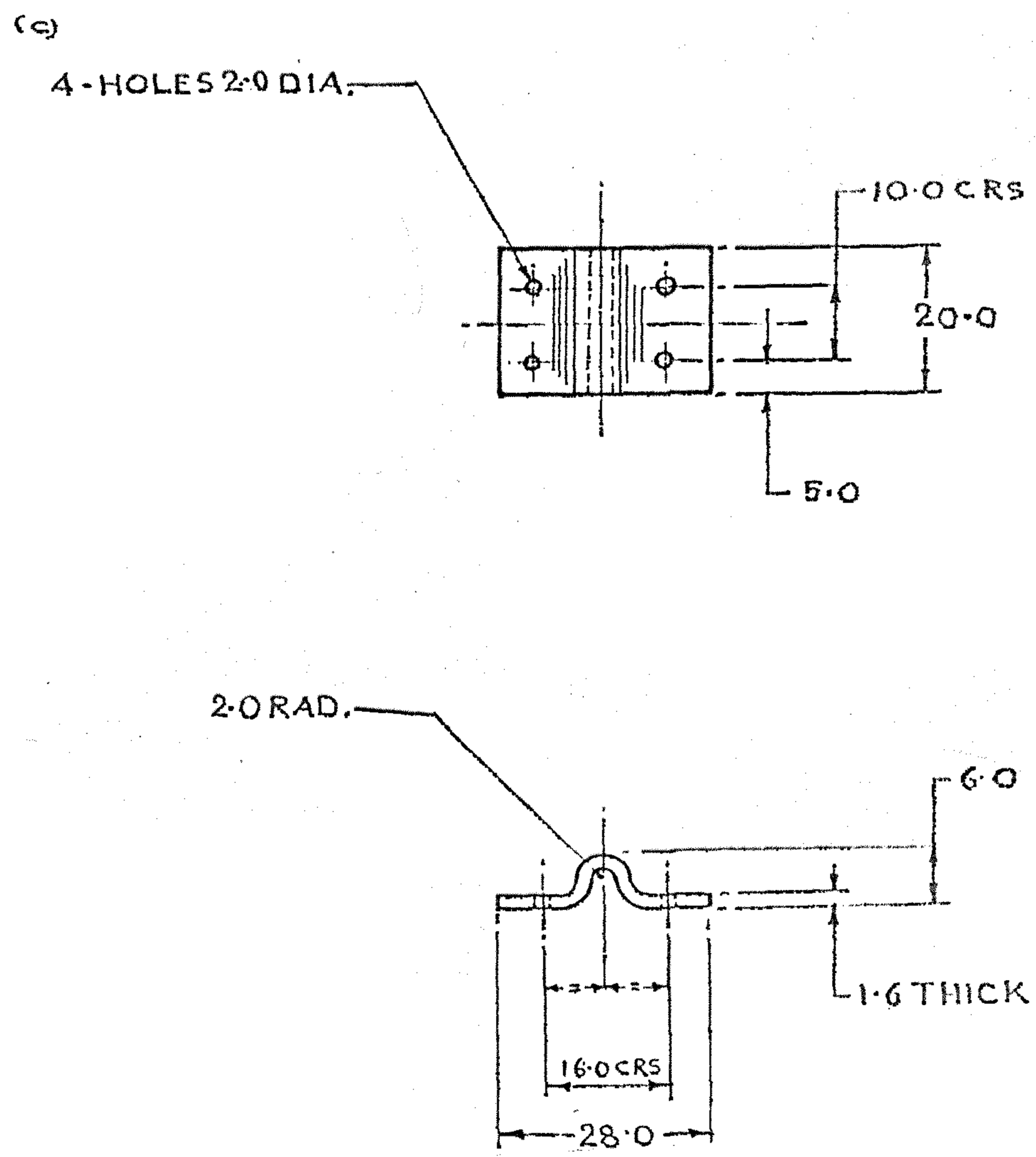

FINISH:-APPLY PRIMER TO IS:2075-2017 & PAINTED
(g) TO IS:8983-1978(ISC-294
OF IS:5-2017) EXCEPT BEARING SURFACES.

NOTE:- TO BE PHOSPHATED CLASS 'B' OF IS:3618-1966

(e) DC: 7136-I. MATL. AMENDED.		17-1-17			
(d) D.C.(I):-5518-I:- NOM. AMENDED & CAT/PT. No. ADDED.		13.11.91	DRAWN sd/-	TRACED sd/-	APPROVED sd/-
(c) D.C.(I):-3378-I:- 4-HOLES 2·0 DIA WERE 1·6 DIA.		12.7.76			
(b) D.C(I):-3097-I. MATL. SPECN. AMENDED.	sd/-	29.7.75.	CHECKED sd/-	sd/-	FOR DIRECTOR IRDE DEHRA DUN.
D.C(I):-1677-I. DRG. SEALED.	sd/-	15.11.67.			
(a) D.C(I):-0291-I(P). MATL. SPECN. WAS B.S. 1449.	sd/-	14.6.67.	SCALE 1/1	DATE:- 1.4.63.	
D.C(I):-0020-I(P). DRG. PROV. SEALED.	sd/-	5.4.63.	DRG. No.		
AMENDMENTS	SIG	DATE	IRDE 111/15		

MATL:- STEEL, Gde-ISH290S (OR) Gde-ISH330S TO IS:5986-2017. (f) (a) (b) (e)

FINISH:- AS ABOVE

CAT/PART No. (d) 5340-007599

STRIP, RETAINING, METALLIC (d)

SHEETS SHEET

(g) D.C:-7224-I FINISH AMENDED		16-4-19	DATE
(f) DC: 7205-I. MATL. AMENDED.		23-7-18	DATE
AMENDMENTS	CHD	SIG	DATE

POLYESTER NEGATIVE PREPARED AT CQA(I)D.DUN
PREPARED BY:- D.C.(I):-0020-I(P), 0291-I(P), 1677-I, 3097-I, 3378-I, 5518-I, 7136-I, 7205-I, 7224-I.
CHECKED BY:- DATE:-

FOR EXPLANATION OF DIMENSIONING ETC., SEE CQA(I)GUIDE No,001-1992
THIRD ANGLE PROJECTION DIMENSIONS ARE IN MILLIMETER.

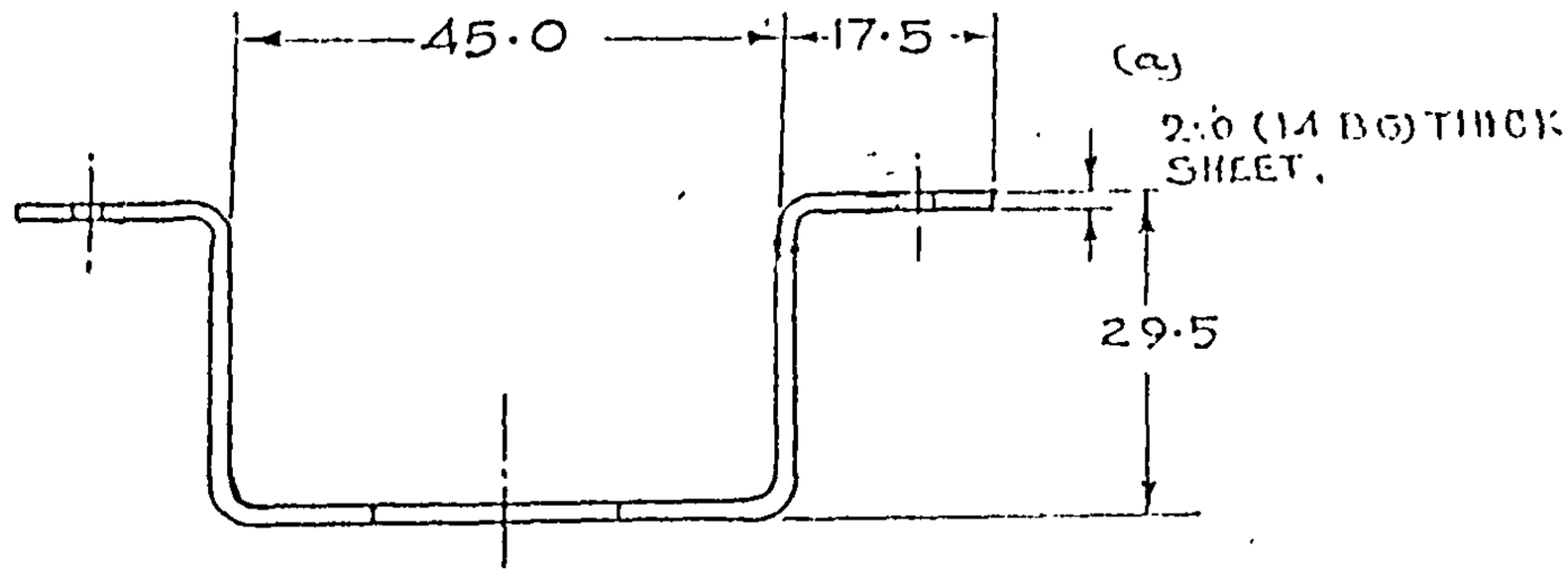

(a)

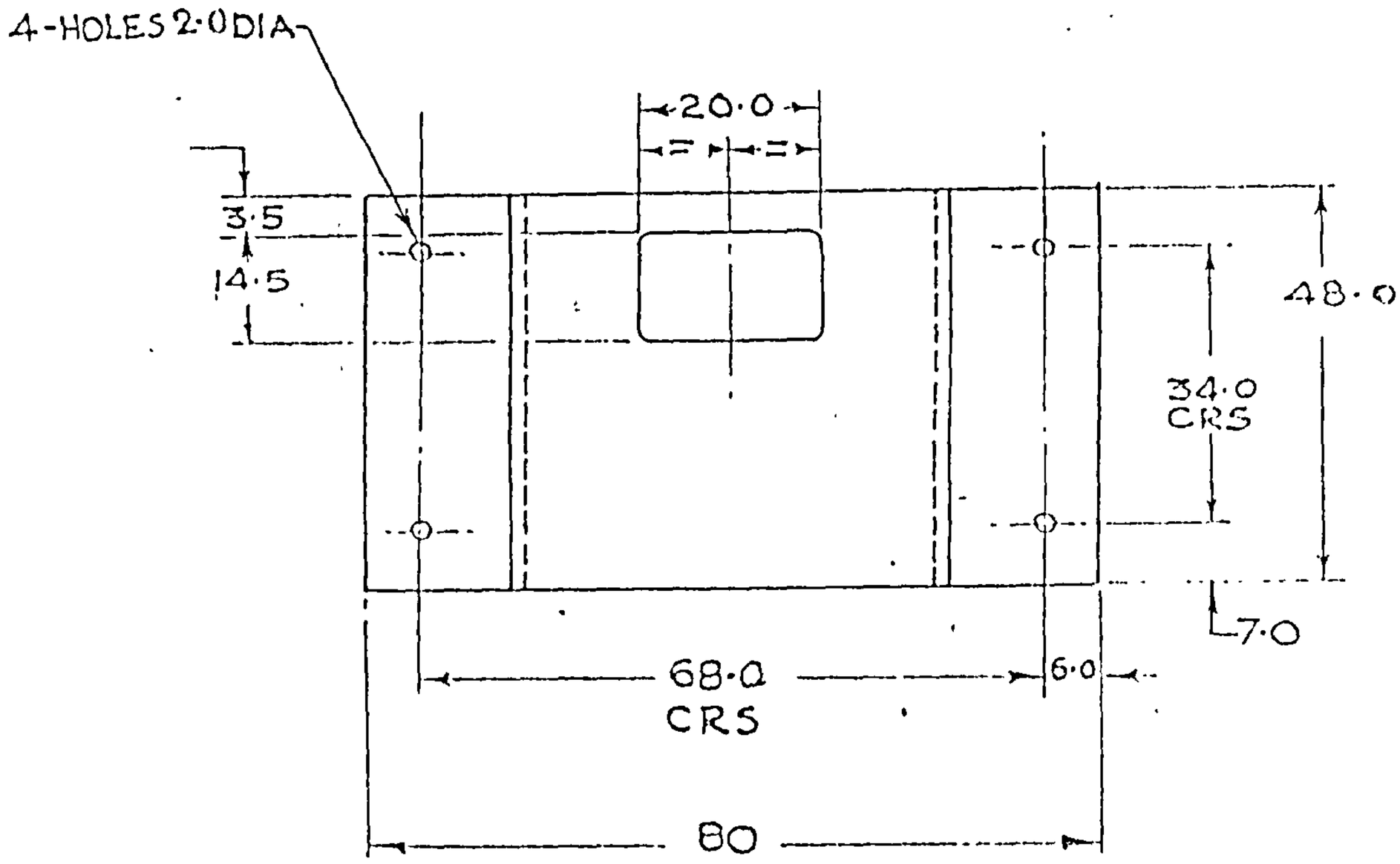

NOTE:-

FINISH:-TO BE PHOSPHATED CLASS 'B' OF IS:3618-1966

AMENDMENTS	SIG	DATE
(d) DC: 7205-I. MATL. AMENDED.		23-7-18
(c) DC: 7136-I MATL AMENDED		17-1-17
D.C.7075-I. OBSOLESCENT CANCELLED.		8.9.15
D.C:-6663-I:- DRG: ENDORSED "OBSOLESCENT		14.5.04
(b) D.C.(I):-5518-I:- NOM. AMENDED & CAT/PT. No. ADDED.		13.11.91
(a) D.C.(I):-3378-I:-2·0 DIA. HOLES WERE 1·6 DIA & THICKNESS 2·0 (14 BG) WAS 1·6.		12.7.76
D.C.(I)-3359-I. DRG. TRACED INCORPORATING ALL THE PREVIOUS AMENDMENTS AND SEALED IN REPLACEMENT OF EXISTING ONE.		22.6.76.

BACK PIECE

DRAWN	TRACED	APPROVED
sd/-	sd/-	sd/-
CHECKED		FOR DIRECTOR IRDE DEHRA DUN
sd/-		

SCALE 1/1 DATE 1-4-63

DRG. NO. IRDE 111/1

MATL:- STEEL Gde-ISH290S (OR) Gde-ISH330S TO IS:5986-2017 (d) (c)

CAT/PART NO. (b)

5340-007899

FINISH:- SEE SHEET 1.

BRACKET, DOUBLE ANGLE (b)

3 SHEETS SHEET-3.

POLYESTER NEGATIVE PREPARED AT CQA(I)D-DUN DC(I):-0020-I(P), 0122-I(P); 0291-I(P), 1677-I, 3097-I, 3359-I, 3378-I, 5518-I, 6663-I, 7075-I, 7136-I, 7205-I.

PREPARED BY:- DATE:-

CHECKED BY:-

VETTED BY:- I/C QM:-

FOR EXPLANATION OF DIMENSIONING ETC., SEE CQA(I)GUIDE No.001-1992
THIRD ANGLE PROJECTION. DIMENSIONS ARE IN MILLIMETERS.

5F

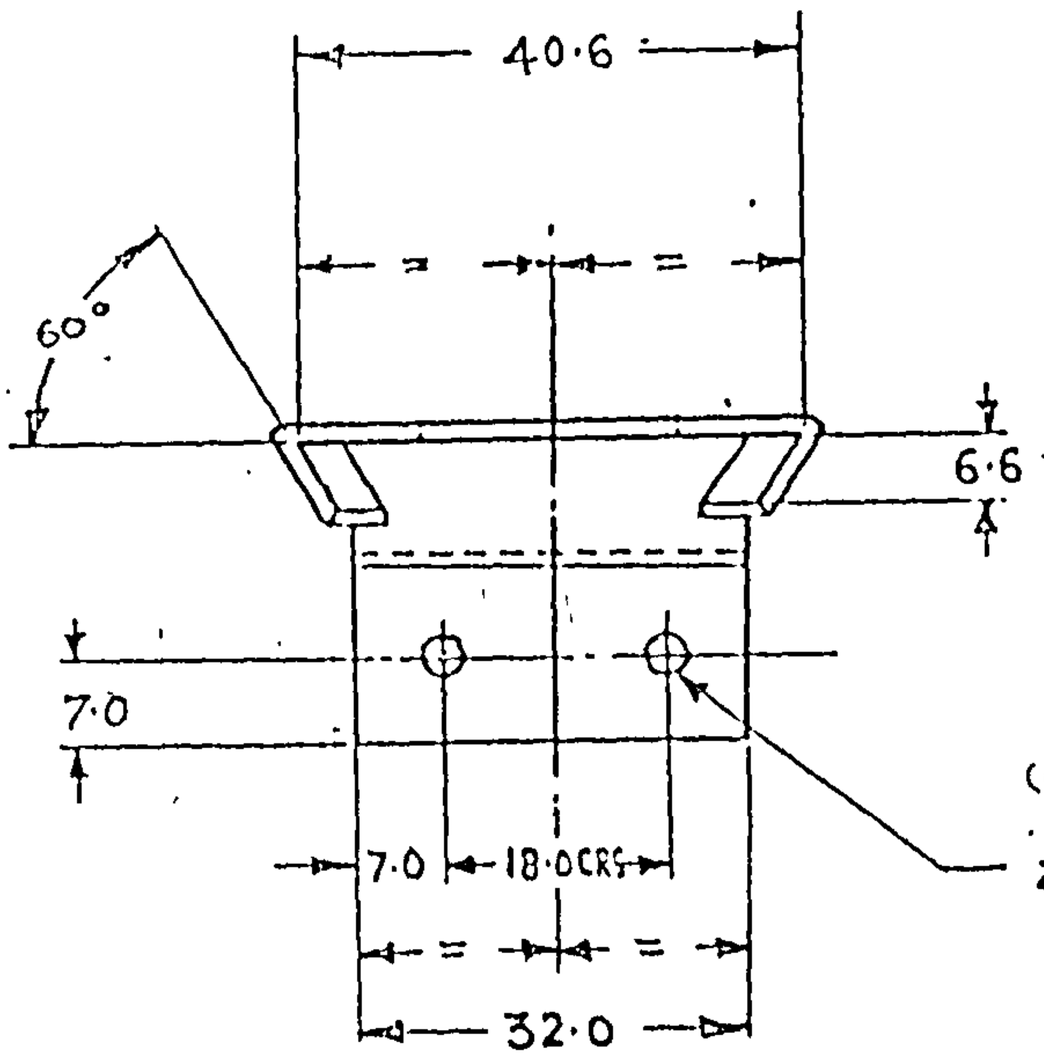

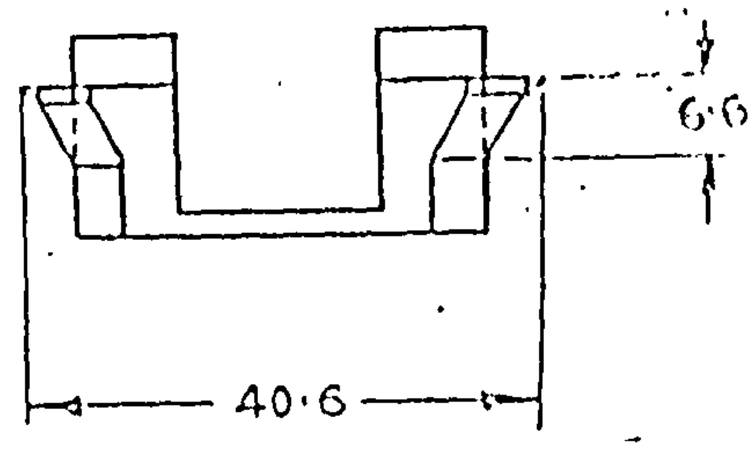

(c) DOVE-TAIL PORTION.
CII-128

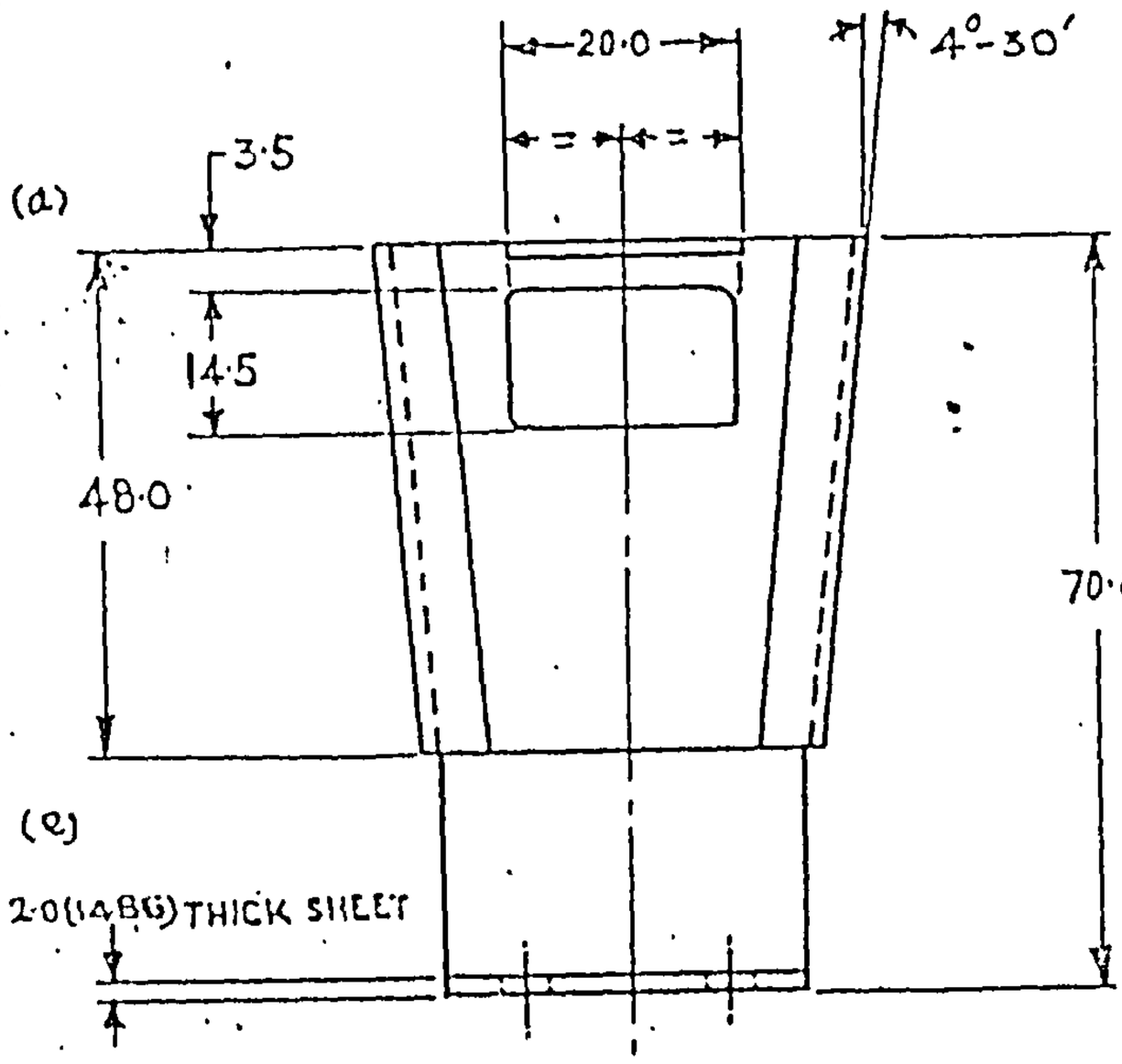

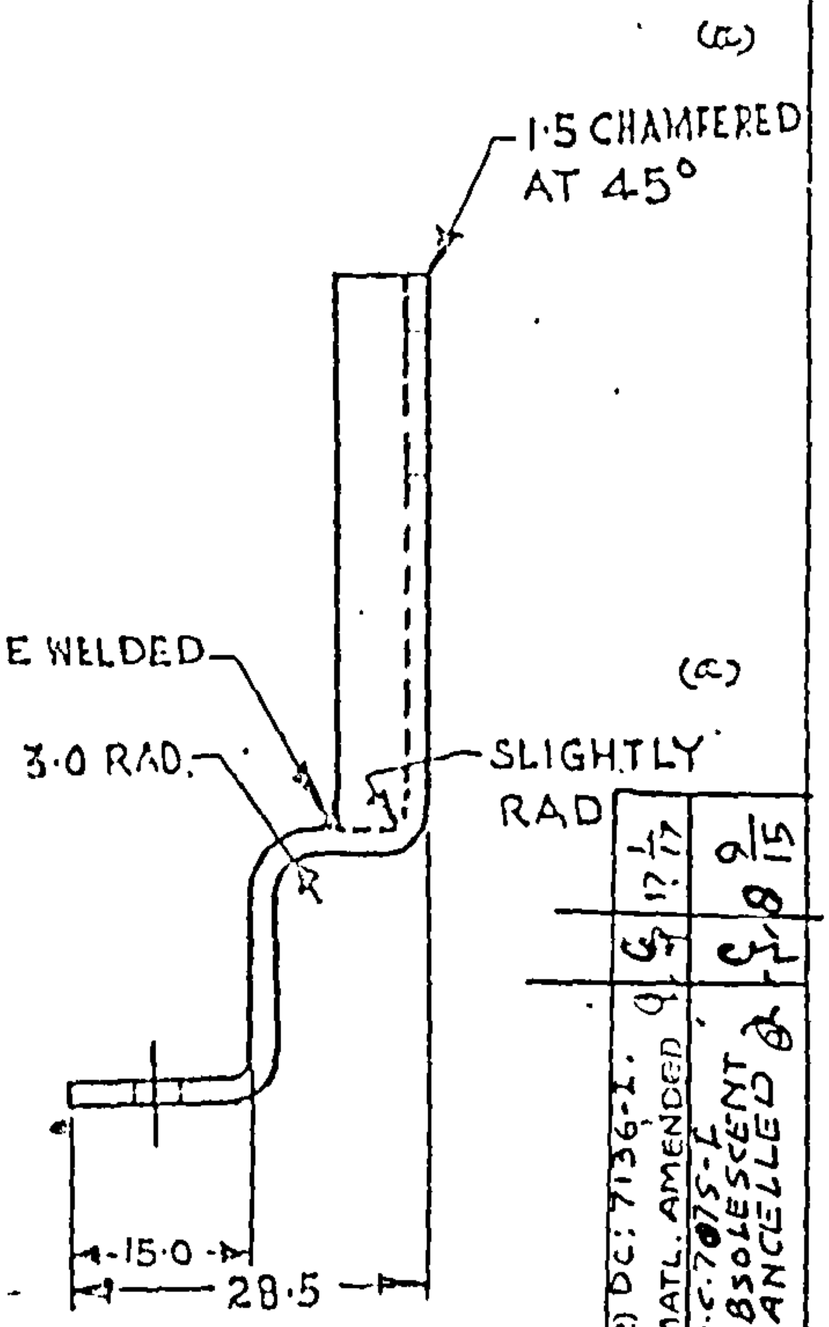

(f) DC: 7205-I. MATL AMENDED.		23-7-18
D.C:-6663-I:- DRG. ENDORSED "OBSOLESCENT"		14.5.04
(d) D.C.(I):-3097-I. MATL. SPEC. AMENDED.	Sd/-	29.7.75
(c) D.C.(I):-2141-I. NOTES AMENDED	Sd/-	28.5.71
D.C.(I):-1677-I DRG. SEALED.	Sd/-	15.11.67
(b) D.C.(I):-0291-I (P):- MATL. SPECN. WAS B.S.1449.	Sd/-	14.6.67
(a) D.C.(I):-0122-I (P):-DRG. MODIFIED & NEW COPY SEALED IN SUPERSESSION OF EXISTING ONE.	Sd/-	2.2.65
D.C.(I):-0020-I(P) DRG. PROV. SEALED.	Sd/-	5.4.63
AMENDMENTS	SIG.	DATE

(d) MATL. STEEL. Gde.-ISH 2905 (OR) Gde-ISH3305 (e) TO IS:5986-2017- (f)

FINISH:- TO BE PHOSPHATED CLASS 'B' OF IS:3618-1966 (c)

BRACKET, DOUBLE ANGLE (f)

(e) DC: 7136-I. MATL. AMENDED 17.1.17
D.C.7075-I OBSOLESCENT CANCELLED 9/15

FRONT PIECE

DRAWN	TRACED	APPROVED
Sd/-	Sd/-	Sd/-
CHECKED		FOR DIRECTOR IRDE DEHRADUN
Sd/-	Sd/-	

SCALE :- 1/1 DATE:- 1.4.63.

DRG. No. IRDE-III/1

CAT/PT. No. (f) 5340-007899

3-SHEETS SHEET-2

D.C.(I):-0020-I(P), 0122-I(P), 0291-I(P), 1677-I, 2141-I, 3097-I, 3378-I, 5518-I, 6663-I, 7075-I, 7136-I, 7205-I.

POLYESTER NEGATIVE PREPARED AT CQA(I)D.DUN
PREPARED BY:- DATE:-
CHECKED BY:-

VETTED BY:-
I/C QM.

FOR EXPLANATION OF DIMENSIONING ETC., SEE CQA(I)GUIDE NNo.001-1992
THIRD ANGLE PROJECTION — DIMENSIONS ARE IN MILLIMETER.

(f) D.C.:- 7236-I. FINISH AMENDED 22-1-92

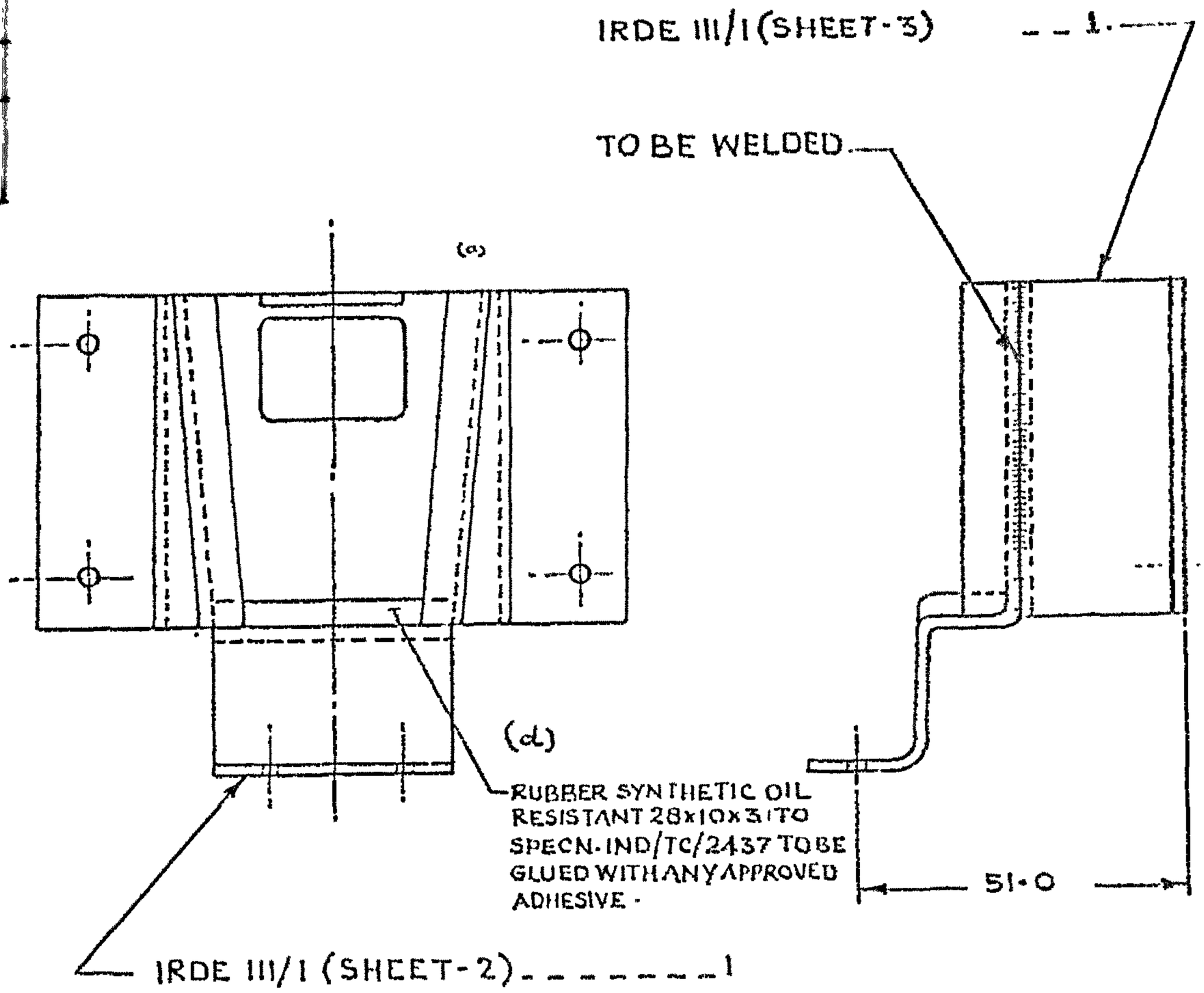

AMENDMENTS	SIG	DATE
D.C.7075-I. OBSOLESCENT CANCELLED		8.9.15
D.C:- 6663-I:- DRG. ENDORSED "OBSOLESCENT"		14.5.04
(e) D.C.(I) 5-5518-I:- NOM. AMENDED & CAT/PT. No. ADDED.		13.11.91
(d) D.C.(I):- 3824-I:- WHEN ORDERED ---102 A DELETED.		20.10.78
(c) D.C(I):-3796-I. VIEW AMENDED TO ILLUSTRATE RUBBER 28x10x3 THICK WITH INDICATING ARROW.		14.8.78
D.C(I):- 1677-I DRG. SEALED.	sd/-	15.11.67
(b) D.C(I):- 0235-I(P). FINISH AMENDED.	sd/-	26.10.66
(a) D.C(I):-0122-I(P):- DRG. MODIFIED & NEW COPY SEALED IN SUPERSESSION OF EXISTING ONE	sd/-	2.5.65.
D.C(I):- 0020-I(P). DRG. PROV. SEALED.	sd/-	5.4.63.

DRAWN sd/-	TRACED sd/-	APPROVED. sd/- FOR DIRECTOR IRDE DEHRA DUN
CHECKED sd/-	sd/-	
SCALE:- 1/1	DATE:- 1.4.63	

DRG. No. IRDE III/1

CAT/PART No. (e) 5340-007899

3-SHEETS SHEET 1

MATL:- SEE DETAILS

FINISH:- PHOSPHATISED CLASS 'B' TO IS:3618-1966 FOLLOWED BY OIL SEALING (5) (e)

BRACKET, DOUBLE ANGLE

POLYESTER NEGATIVE PREPARED AT CQA(I) D.DUN
PREPARED BY:- DATE:-
CHECKED BY:-

D.C(I):- 0020-I(P), 0122-I(P), 0235-I(P), 1677-I, 3796-I, 3824-I, 6663-I. 7075-I, 7236-I.

MQ C/I I-5518-I. VETTED BY...