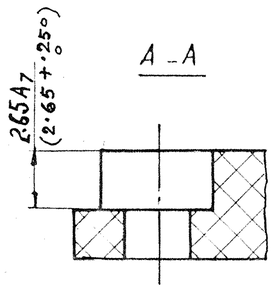


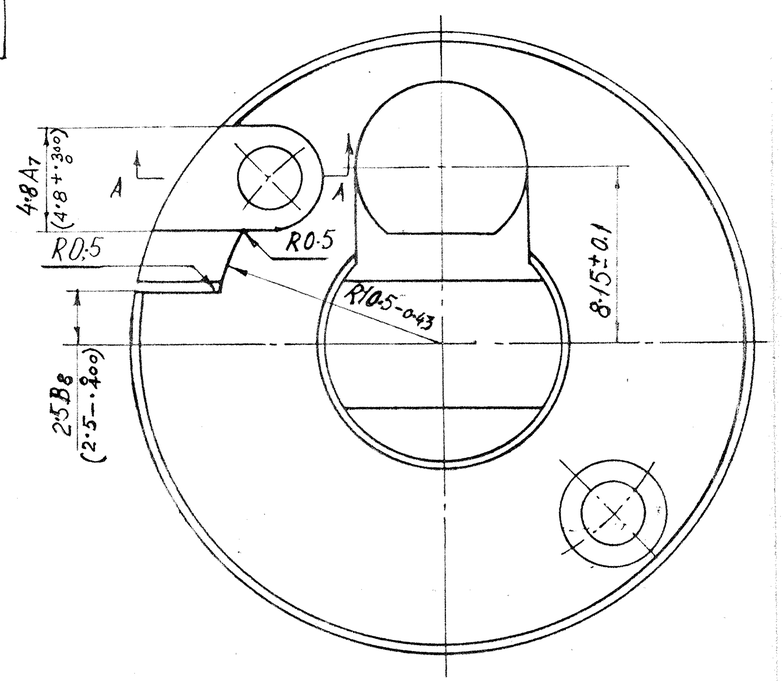


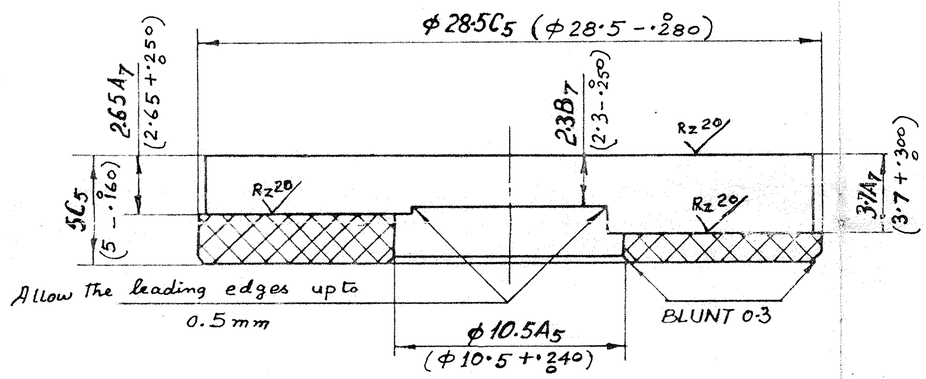


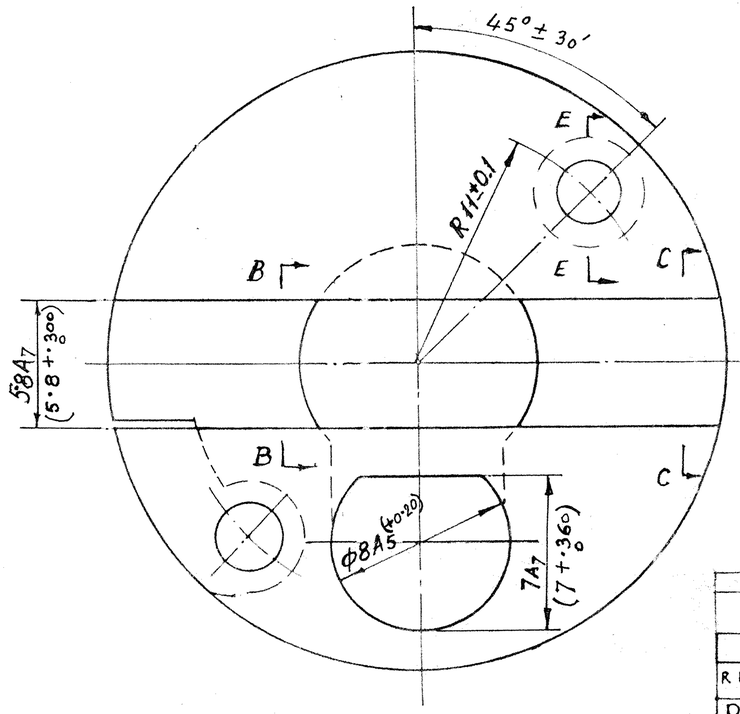


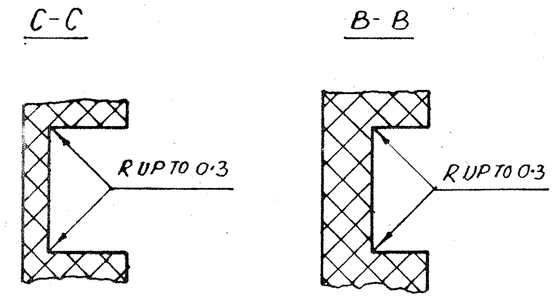


1) ALL DIMENSIONS, EXCEPT 5·8A7 ARE ENSURED BY THE TOOLS i.e. "TOOLING".

2) METALLIC INCLUSIONS ARE NOT PERMITTED.

3) MATERIAL : MOULDING MATERIAL AΓ-4B, GOST 20437-75.

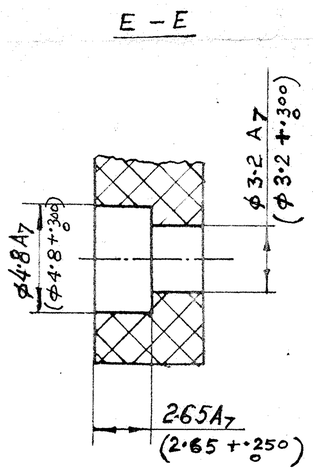


INDIGENOUS EQUIVALENT MATERIAL:-
MOULDING MATERIAL TO SPEC. IND/ME/951 (PROV) GRADE A. (LATEST ISSUE)

| R No | DATE | AUTHORITY | REVISION | ZONE | AHSP | D.O. |
|---|---|---|---|---|---|---|
| | 19-9-94 | D.C. 35811-A | INDIGENOUS EQUIVALENT MATERIAL ADDED. | | | |
| | 9-8-89 | D.C 34686-A | PROJECTION SHOWN ON TOP FACE OF ELEVATION DELETED | | | |
| | 28-10-85 | D.C.I. 33853-A | DRG. SEALED PROV. | | | |

DRG. SEALED 28-10-85 (PROV.)

| | |
|---|---|
| 3-024045 | 3B15 |
| PLATE | 2-8 |
| | Scale. 5:1. |
| APPD. FOR C.I.(A) | AHSP:- C.I.(A) KIRKEE |
| | OTF/DD/016. |