DRG.NO. 32-0701(MK-III) Alt

NOM.SIZE & FIT.	DEVIATION

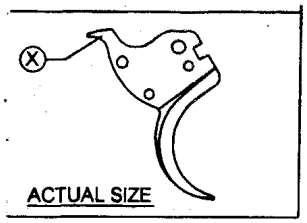

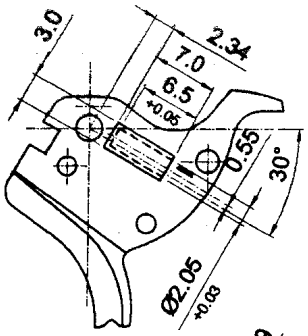

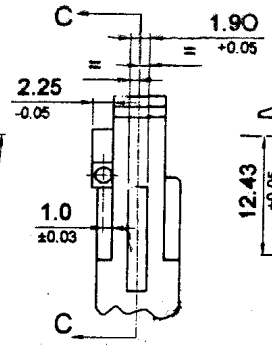

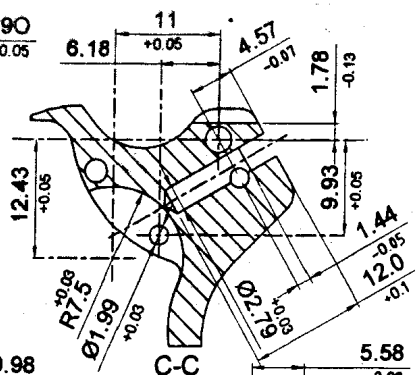

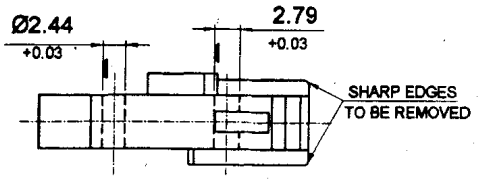

MATERIAL :-
B.S. Pt. 1: 1983 Gd. 070 M-55
(B.S. 970 EN 9)
ALT. MATERIAL FROM IC ROUTE :-
B.S. 3146 Pt. 1: 1974 TYPE CLA 12
ALT. MATERIAL FOR MIM COMPONENTS
MIM 4650.

C : 0.3 - 0.6% Ni : 1.5 - 2.5%
Cr : 0.5.0 MAX. Si : 0.5 %
Mo : 0.5.0 MAX. Mn : 0.3 %
P : 0.03 MAX. Fe - BALANCE
S : 0.03 % MAX.
SINTERED DENSITY : 7.5 MIN. g/cm^3

HEAT TREATMENT :-
HARDENED & TEMPERED BY INDUCTION HEATING.

HARDNESS:-
COMPONENT MUST CONFORM TO THE FOLLOWING HARDNESS NUMERALS AT THE POSITION INDICATED.

LETTER	VPN
X	500-600

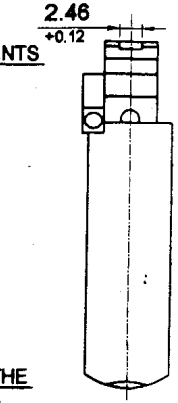

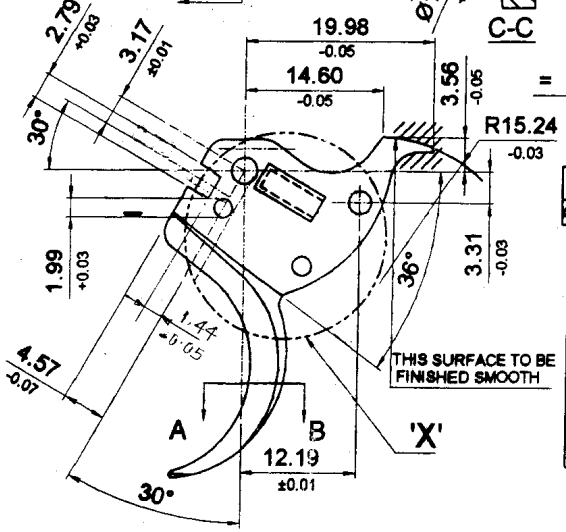

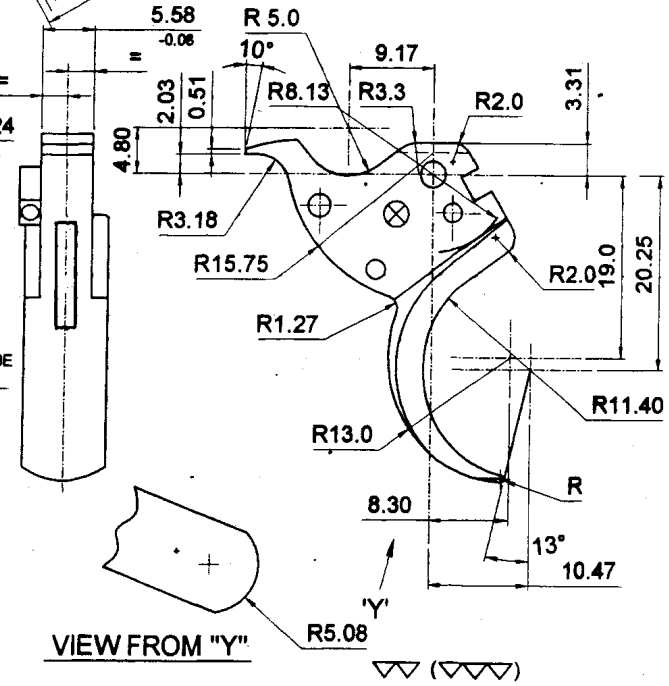

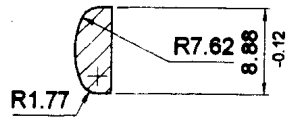

SECTION A-B

VIEW FROM "Y"

FINISH:-
ELECTROSTATIC POWDER COATNG IN BLACK COLOUR AFTER ASSY.

NOTE:-
1. ALL SHARP EDGES TO BE REMOVED
2. MANUFACTURER'S INITIAL, BATCH NO. & YEAR OF MANUFACTURE TO BE MARKED ON THE SURFACE MARKED THUS ⊗
3. A TOLERANCE OF -0.03 IS ALLOWED ON ALL PROFILE.
4. ALL DIMENSIONS ARE IN mm.
5. SURFACE MARKED THUS ////TO BE FINISHED SMOOTH.

ITEM	DESCRIPTION	No.OFF	MATERIAL	TREATMENT	STD.	REMARKS

SCALE 1:1 | COMPONENT | STORE DRG. NO.

UNSPECIFIED TOLERANCES IS : 2102 (MEDIUM)

280	DATE	NAME
DRN.		
CHD.		
TCD.		
COMP.		
JWM/DO		
JWM/SEC.		

MK-III TRIGGER

FIELD GUN FACTORY KANPUR

APPROVED

DRG. NO. 32-0701 (MK-III) Alt

SHTS | SHT No.

VER. NO.	ZONE	DATE	DESCRIPTION	BY	APPD.
3					
2					
1	1	4			

IN CASE OF DOUBT ASK : DO NOT SCALE