PART No.
M 306000 GA

ENGINEERING CHANGES			
ECR No.	DATE	REV	SIGN
10297	07.08.06	NEW	AKS
10346	25.08.06	1	AKS
10382	19.09.06	2	AKS

10346: Pressure test connector added in the delivery port. DIN 4766.1 and 7261 added. One delivery port plugged. Surface protection reviewed and updated. Drawing redrawn.

10382: Double socket with related dimension added to inlet port. DIN 84 6.61.8 and 7521 were 6621 and 7461. In plugged port Aluminium washer deleted and special washer with sealing ring added. Torque reviewed and updated. Drawing redrawn.

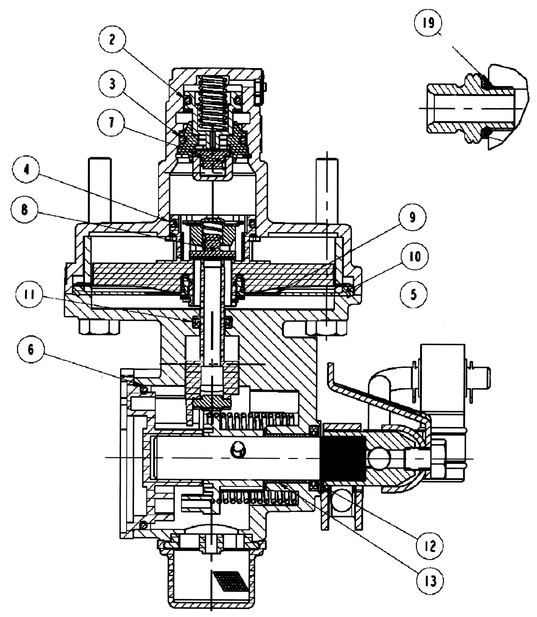

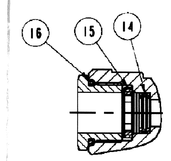

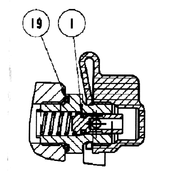

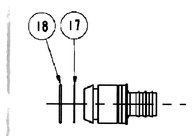

CUSTOMER END FITTINGS

REPAIR KIT CONSISTS OF ITEMS SHOWN
SCL PART No.: MSP 3/99
TML PART No.: 2809 4370 01 29

ITEM. No	TML PART No.	SCL PART No.	DESCRIPTION	QTY
1	2809 4370 77 01	M910390	SEALING RING	2
2	2617 4370 77 04	M923060	SEALING RING	1
3	2809 4370 77 02	M925570	SEALING RING	1
4	2617 4370 77 03	M920990	SEALING RING	1
5	2809 4370 67 01	M923570	SPLIT PIN	2
6	2641 4370 77 04	M630530	SEALING RING	1
7	2809 4370 90 01	M311631	BONDED VALVE	1
8	2809 4370 90 02	M311610	BONDED VALVE	1
9	2809 4370 77 03	M339020	DIAPHRAGM DISC	1
10	2809 4370 77 04	M339090	DIAPHRAGM	1
11	2809 4370 77 05	M342040	SEAL	1
12	2809 4370 77 06	M339330	DUST SEAL	1
13	2809 4370 67 02	M339150	SPLIT BUSH	1
14	2782 4370 87 03	M932720	SPRING ELEMENT NG-12	1
15	2782 4370 43 02	M932730	RETAINING CLIP NG-12	1
16	2782 4370 77 22	M932700	SEALING RING NG-12	1
17	2782 4370 77 23	M935980	SEALING RING NG-12	1
18	2782 4370 77 24	M935990	SEALING RING NG-12	1
19	2809 4370 77 07	M910180	SEALING RING	2
20	2647 4230 77 01	M925880	SEALING RING	2
	2809 4370 48 01	M919910	GREASE SACHET	2

DO NOT SCALE IF IN DOUBT ASK

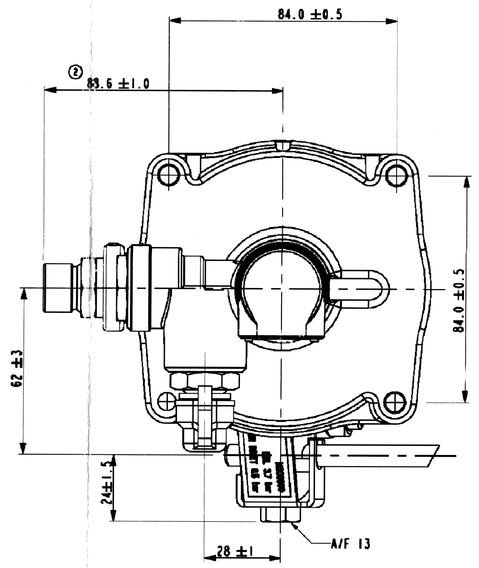

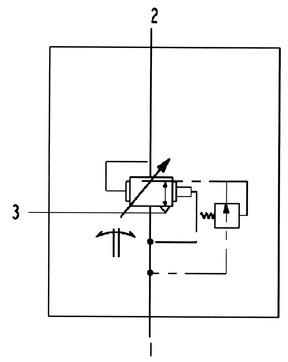

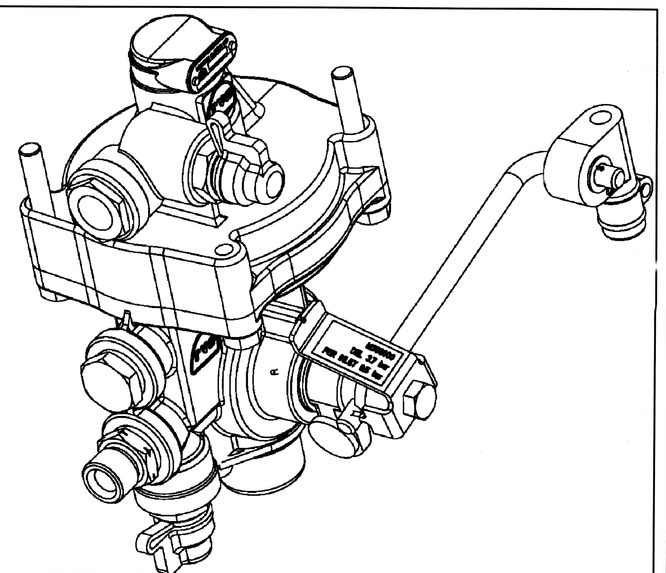

M306000
DEL 3.7 bar
FOR INLET 6.5 bar

LABEL DETAILS

WORKING PRESSURE : 10 bar
THERMAL RANGE OF APPLICATION : -40°.....+80° C
MEDIUM : AIR

1 : INLET PRESSURE
2 : DELIVERY PRESSURE
3 : EXHAUST

INSTALLATION POSITION AS DRAWN

M1 : NECESSARY DISPLACING MOMENT : 1.7 Nm (p1 = 0 bar)
M2 : ADMISSIBLE DISPLACING MOMENT : 20 Nm
P : LOCATION REFERS GROOVE ON ANGLE INDICATOR
Q : LOCATION REFERS PROJECTED EDGE ON LOWER BODY
O : LOCATION REFERS CENTER OF LEVER CLAMPING RING

WHEN P AND O COINCIDE, THE DELIVERY PRESSURE SHOULD BE
3.7 ±0.25 bar FOR AN INLET PRESSURE OF 6.5 bar
WHEN ANGLE BETWEEN OP AND OQ IS 17° ±1°
THE DELIVERY PRESSURE SHOULD BE 6.4 ±0.1 bar
FOR AN INLET PRESSURE OF 6.5 bar.
PRODUCT SPECIFICATION No.: PSSC 163C, ISSUE No.1 DATE 14.10.05
MOUNTING OF THIS VALVE SHOULD BE WITHIN ±30° ANGLE
WITH RESPECT TO VERTICAL.
* ROD SHOULD MOVE FREELY WHEN SCREW IS LOOSE AND SHOULD GRIP
FIRMLY WHEN SCREW IS TIGHTENED.
WEIGHT OF THE VALVE : 1.9 kg
OPEN PORTS/MALE THREADS ARE FITTED WITH CLOSURE PLUGS/CLOSURE SLEEVES
FOR STORAGE AND TRANSIT PURPOSES.
QUALITY COMPLIANCE TESTS WILL BE CARRIED OUT REGULARLY
AS PER CLAUSE No. 15.0 OF PSSC 163C.
NOISE LEVEL AT EXHAUST ≦ 72 dBA
EQUIVALENT FLOW DIAMETER : 10mm
▲ SERVICE LIFE TO FIRST OVERHAUL : 3 YEARS / 3,00,000 KMs WHICH EVER IS EARLIER

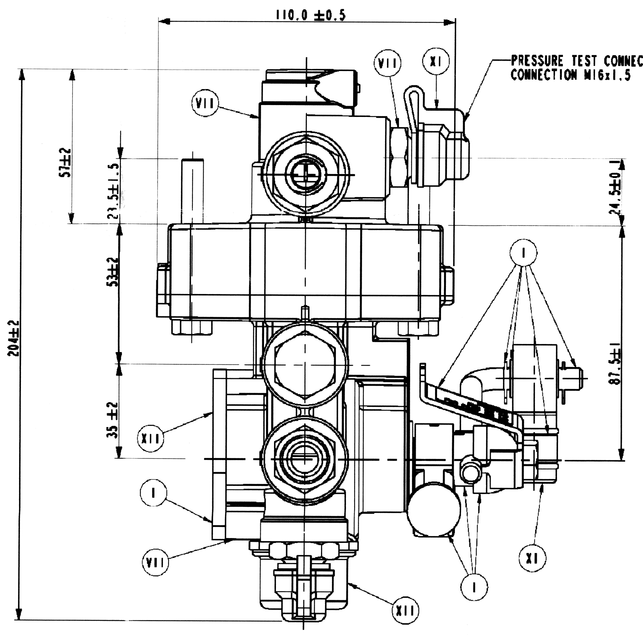

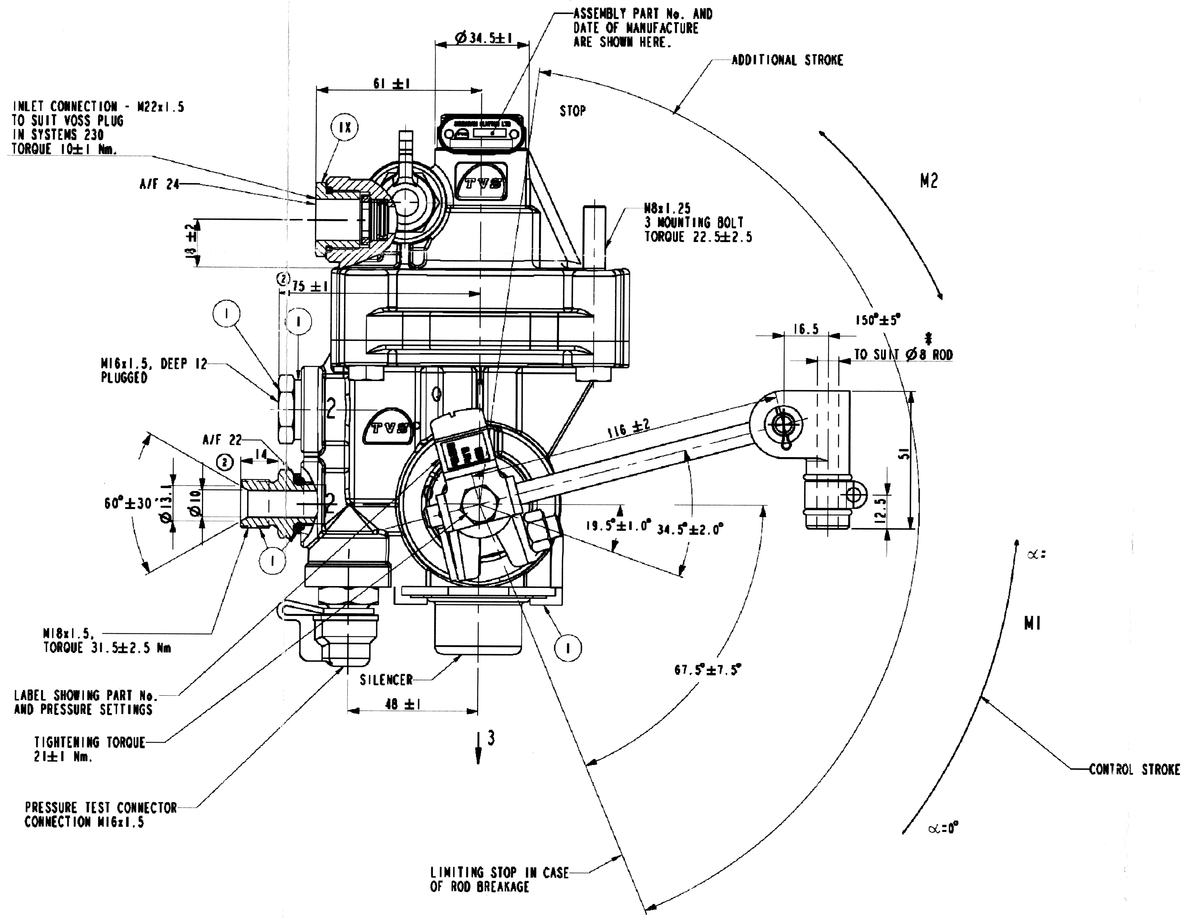

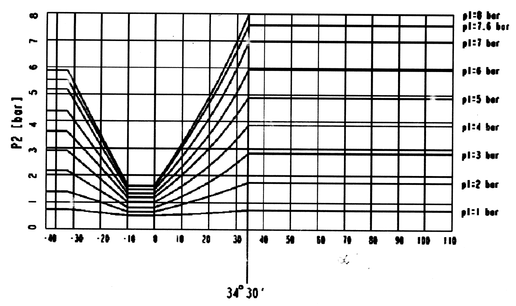

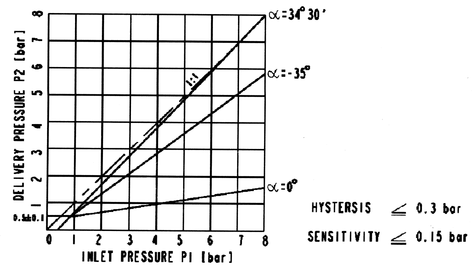

ASSEMBLY PROCEDURE

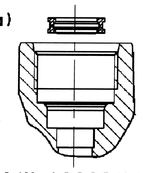

THE SPRING ELEMENT IS INSERTED INTO THE CHAMBER UNDER THE THREAD ROOT OF THE CONNECTION BORE (a) AND (b).

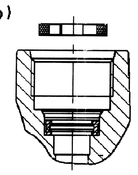

THE RETAINING CLIP IS INTRODUCED SO THAT IT RESTS FLAT ON THE THREAD ROOT (b) AND (c).
THE SPRING ELEMENT AND RETAINING CLIP ARE SYMMETRICAL.

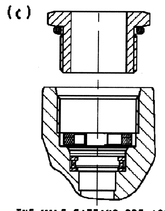

THE MALE FITTING PRE-ASSEMBLED WITH THE PRE-GREASED O-RING TO SEAL THE THREAD IS SCREWED BY HAND INTO THE TAPPED BORE (c) AND TIGHTENED.

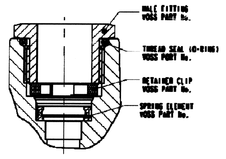

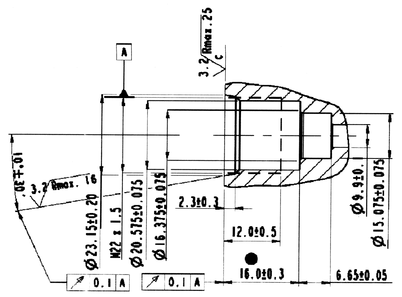

DETAILS OF PORT MACHINING FOR M22x1.5

RV11	STEEL	NO TREATMENT	
RV1	CAST IRON	PLATED	
RV	STEEL	ZINC IRON PLATED	
RV1	CAST IRON	NO TREATMENT	
RV11	ZINC ALLOY	ANODISED	
RV1	PLASTIC	NO TREATMENT	
RV	RUBBER	NO TREATMENT	
V	STAINLESS STEEL	NO TREATMENT	
IX	BRASS	NO TREATMENT	
VIII	ZINC ALLOY	CHROMATED	
VII	ALUMINIUM ALLOY	ANODISED	
VI	ALUMINIUM ALLOY	CHROMATED	
V	CAST IRON	PAINTED	
IV	STEEL	POWDER COATED	
III	STEEL	PAINTED	
II	STEEL	PHOSPHATED	
I	STEEL	ZINC PLATED	
PART CODE	MATERIAL	SURFACE PROTECTION	

	SIGN	DATE	MATERIAL	--
DRN	KSM	17.07.06	ALTERNATE MATERIAL	REFER TABLE
CHD	CPS	17.07.06	SURFACE PROTECTION	--
APD	SS	17.07.06	RAW PART No.	--

CRITICAL
MAJOR
NO STRICT - METROP

CONFIDENTIAL DRAWING
THIS DRAWING IS THE SOLE PROPERTY OF SUNDARAM CLAYTON LIMITED. IT SHOULD NOT BE COPIED OR COMMUNICATED TO ANY PERSON WITHOUT THE WRITTEN APPROVAL OF SUNDARAM CLAYTON LIMITED. © 2006

UNLESS OTHERWISE SPECIFIED ALL DIMENSIONS IN mm
REMOVE BURRS AND SHARP EDGES FROM FINISHED PARTS
ALL DIMENSIONS ARE AFTER SURFACE PROTECTION / TREATMENT
MALE THREAD TO IS 14962 (PART3) GA : 2001
FEMALE THREAD TO IS 14962 (PART3) GB : 2001

SAMPLE TO BE APPROVED

Date	Mod. No.	Sign	Zone	Modified on	Chkd	Appd
25.08.06	ASM1025 ASM1065	NR	-	NEW RELEASE	KMV KSM	VRP

GENERAL TOLERANCES

RANGE OF NOMINAL DIMENSIONS (in mm)					FORCE, POWER, PRESSURE etc.
≤ 50	> 50 ≤ 100	> 100 ≤ 400	> 400	(± *)	(± X)
1	2	3	4	3	10

— 100 mm —

CD TVS

SCALE 1:1

SUNDARAM CLAYTON LIMITED

AUTOMATIC LOAD SENSING VALVE

PART No. M 306000 GA

TML PART No.: 2707 4370 01 07