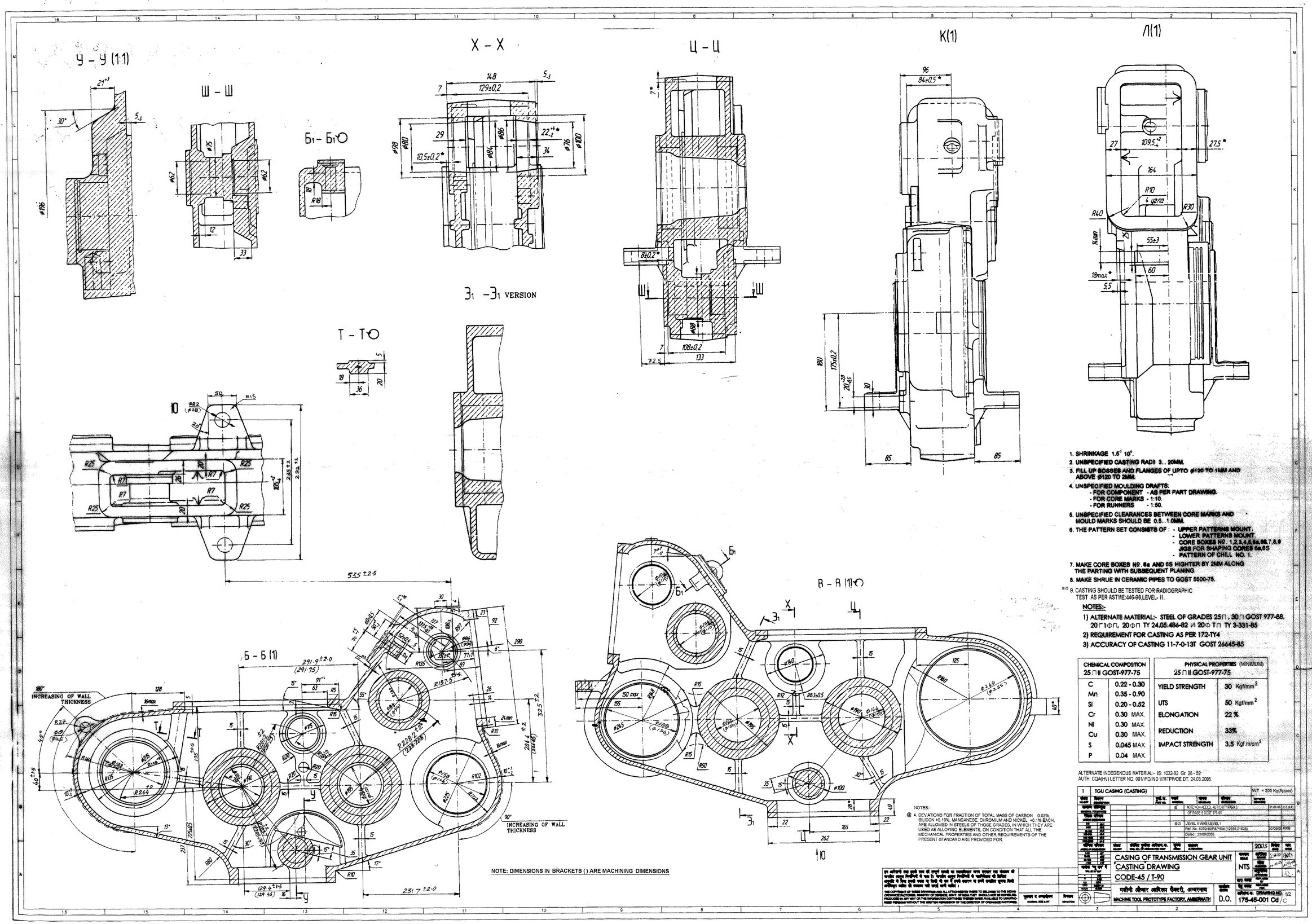

1. SHRINKAGE 1.5° 10°.
2. UNSPECIFIED CASTING RADII 3... 20MM.
3. FILL UP BOSSES AND FLANGES OF UPTO ⌀120 TO 1MM AND ABOVE ⌀120 TO 2MM.
4. UNSPECIFIED MOULDING DRAFTS:
   - FOR COMPONENT - AS PER PART DRAWING.
   - FOR CORE MARKS - 1:10.
   - FOR RUNNERS - 1:50.
5. UNSPECIFIED CLEARANCES BETWEEN CORE MARKS AND MOULD MARKS SHOULD BE 0.5...1.0MM.
6. THE PATTERN SET CONSISTS OF :
   - UPPER PATTERNS MOUNT.
   - LOWER PATTERNS MOUNT.
   - CORE BOXES Nº. 1,2,3,4,5,6a,6b,7,8,9 JIGS FOR SHAPING CORES 6a,6S
   - PATTERN OF CHILL NO. 1.
7. MAKE CORE BOXES Nº. 6a AND 6S HIGHTER BY 2MM ALONG THE PARTING WITH SUBSEQUENT PLANING.
8. MAKE SHRUE IN CERAMIC PIPES TO GOST 5500-75.

@2) 9. CASTING SHOULD BE TESTED FOR RADIOGRAPHIC TEST AS PER ASTME:446-98,LEVEL- II.

NOTES:-

1) ALTERNATE MATERIAL:- STEEL OF GRADES 25Л , 30Л GOST 977-88, 20ГЛФП, 20ФП TY 24.05.484-82 И 20ФТП TY 3-331-85
2) REQUIREMENT FOR CASTING AS PER 172-TY4
3) ACCURACY OF CASTING 11-7-0-13T GOST 26645-85

CHEMICAL COMPOSITION 25ЛII GOST-977-75	
C	0.22 - 0.30
Mn	0.35 - 0.90
Si	0.20 - 0.52
Cr	0.30 MAX.
Ni	0.30 MAX.
Cu	0.30 MAX.
S	0.045 MAX.
P	0.04 MAX.

PHYSICAL PROPERTIES (MINIMUM) 25ЛII GOST-977-75	
YIELD STRENGTH	30 Kgf/mm^2
UTS	50 Kgf/mm^2
ELONGATION	22 %
REDUCTION	33%
IMPACT STRENGTH	3.5 $Kgf.m/cm^2$

ALTERNATE INDEGENOUS MATERIAL:- IS: 1030-82 Gr. 28 - 82
AUTH: CQA(HV) LETTER NO. 08/IIFD/IND V/MTP/FIOE DT. 24.03.2005.

NOTES:-
@ 4. DEVIATIONS FOR FRACTION OF TOTAL MASS OF CARBON 0.02%, SILICON ±0.10%, MANGANESE, CHROMIUM AND NICKEL ±0.1% EACH, ARE ALLOWED IN STEELS OF THOSE GRADES, IN WHICH THEY ARE USED AS ALLOYING ELEMENTS, ON CONDITION THAT ALL THE MECHANICAL PROPERTIES AND OTHER REQUIREMENTS OF THE PRESENT STANDARD ARE PROVIDED FOR.

1	TGU CASING (CASTING)				WT. = 200 Kg(Approx)
		@	MOSTO/01/4D(3D) AUTO-MTP/PRA/5 OF PAGE 5 DOS/ 97-98	01.06.06	K.S.B.R.
		@2)	LEVEL II WAS LEVEL I Ref. No. 6070/45/PA/PIDA (12695,21428) Dated : 23/09/2005.	30/09/05	KRB
				2005	

CASING OF TRANSMISSION GEAR UNIT
CASTING DRAWING
CODE-45 / T-90

NTS

मशीनी औजार प्रोटोटाइप फैक्टरी, अम्बरनाथ
MACHINE TOOL PROTOTYPE FACTORY, AMBERNATH

D.O. 175-45-001 Cd/C

DRAWING NO. 1/2

इस ड्राइंग के सभी अधिकार भारत सरकार के रक्षा मंत्रालय के आर्डनेंस फैक्टरीज़ मंत्रालय के अधीन हैं। इसके अलावा निर्देशों के पालन में आर्डनेंस के किसी कारखाने के किसी भी व्यक्ति के पास है उसे इसे इसके उपयोग व इसमें उपलब्ध सूचना किसी अधिकृत व्यक्ति के अलावा नहीं करनी चाहिए।
THE COPYRIGHT OF THESE DRAWINGS AND ALL ATTACHED RIGHTS THERETO BELONGS TO THE INDIAN ORDNANCE FACTORIES, MINISTRY OF DEFENCE, GOVT. OF INDIA. THEY SHOULD NOT BE COPIED OR REPRODUCED IN ANY WAY OR THE INFORMATION CONTAINED THEREIN MADE AVAILABLE TO UNAUTHORISED PERSONS WITHOUT THE WRITTEN PERMISSION OF THE DIRECTOR OF ORDNANCE FACTORIES.

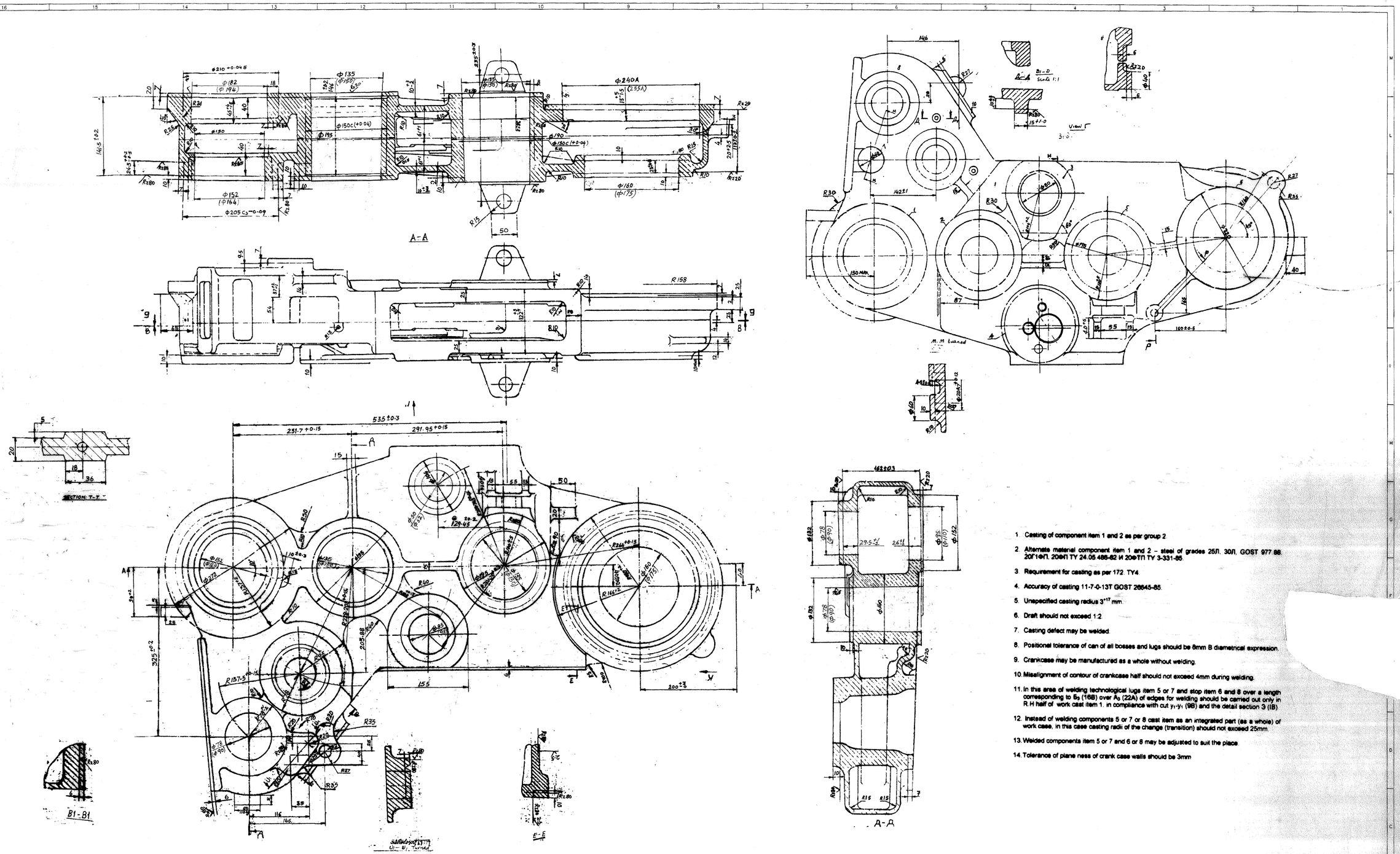

1. Casting of component item 1 and 2 as per group 2.
2. Alternate material component item 1 and 2 – steel of grades 25Л, 30Л, GOST 977-88. 20Г1ФЛ, 20ФЛ TY 24.05.486-82 И 20ФТЛ TY 3-331-85.
3. Requirement for casting as per 172. TY4.
4. Accuracy of casting 11-7-0-13T GOST 26645-85.
5. Unspecified casting radius 3^{+17} mm.
6. Draft should not exceed 1:2.
7. Casting defect may be welded.
8. Positional tolerance of can of all bosses and lugs should be 8mm B diametrical expression.
9. Crankcase may be manufactured as a whole without welding.
10. Misalignment of contour of crankcase half should not exceed 4mm during welding.
11. In this area of welding technological lugs item 5 or 7 and stop item 6 and 8 over a length corresponding to $Б_3$ (16B) over $А_3$ (22A) of edges for welding should be carried out only in R.H half of work cast item 1. in compliance with cut y_1-y_1 (9B) and the detail section 3 (IB).
12. Instead of welding components 5 or 7 or 8 cast item as an integrated part (as a whole) of work case, in this case casting radii of the change (transition) should not exceed 25mm.
13. Welded components item 5 or 7 and 6 or 8 may be adjusted to suit the place.
14. Tolerance of plane ness of crank case walls should be 3mm.

NOTE:- FIRST ANGLE POJECTION

CASING OF TGU (CASTING)							
संख्या NO OFF	विवरण DESCRIPTION	पुर्ज़ क्र. PART NO	पदार्थ MATERIAL	मानक STANDARD	परिमाण DIMENSIONS	अभ्यंतर REMARKS	
सामान्य सहिष्णुता GENERAL TOLERANCE							
रैखिक परिमाण LINEAR DIMENSIONS							
0-3	±0.1						
3-6	±0.2						
6-30	±0.3						
30-120	±0.5						
120-315	±0.8						
315-1000	±1.2						
1000-2000	±1.7						
कोणिक परिमाण ANGULAR DIMENSIONS		संख्या NO OFF	संबंधित पुर्ज़ों की संख्या ज्ञापन क्र. SHO NO OF ASSOCIATED PART	मुख्य MODEL	संशोधन ALTERATION	2013 DATE	दिनांक DATE / नाम NAME
0-10	±0.5°						
10-50	±0.5°						
50-120	±0.5°						
120-400	±0.5°						
संयोजन गहन एवं के VALUE OF FIT							
H	+25						
h	0,25						
ISO	7-8						
ISO	11-13						
ISO	14-17						

CASING OF TRANSMISSION GEAR UNIT.
CASTING DRAWING
CODE - 45 / T-90

मशीनी औजार आदिरूप फैक्टरी, अम्बरनाथ
MACHINE TOOL PROTOTYPE FACTORY, AMBERNATH

स्केल SCALE: NTS
अंकित DRAWN: 18.6.90
जाँच CHECKED:
अनुमोदित APPROVED:
DO.
DRAWING NO. 175-45-001Cd/c 2/2

इस ऑरडनेंस तथा इसके साथ की सम्पूर्ण सामग्री का स्वामित्वधार भारत सरकार रक्षा मंत्रालय की बौद्धिक आपूर्ति निदेशिकी के पास है। कारखाने आपूर्ति निदेशिकी के सहमतिबल के बिना अनुमोदी के बिना इसकी नकल या किसी भी रूप में इसके उपयोग या इसमें समाहित सूचना किसी अनधिकृत व्यक्ति को प्रदान नहीं करनी चाहिए।
THE COPYRIGHT OF THESE DRAWINGS AND ALL ATTACHMENTS THERETO BELONGS TO THE MINISTRY OF ORDNANCE FACTORIES MINISTRY OF DEFENCE, GOVT OF INDIA THEY SHOULD NOT BE COPIED REPRODUCED IN ANY WAY OR THE INFORMATION CONTAINED THEREIN MADE AVAILABLE TO UNAUTHORISED PERSONS WITHOUT THE WRITTEN PERMISSION OF THE DIRECTOR OF ORDNANCE FACTORIES