7X-4081

∇4(∇)

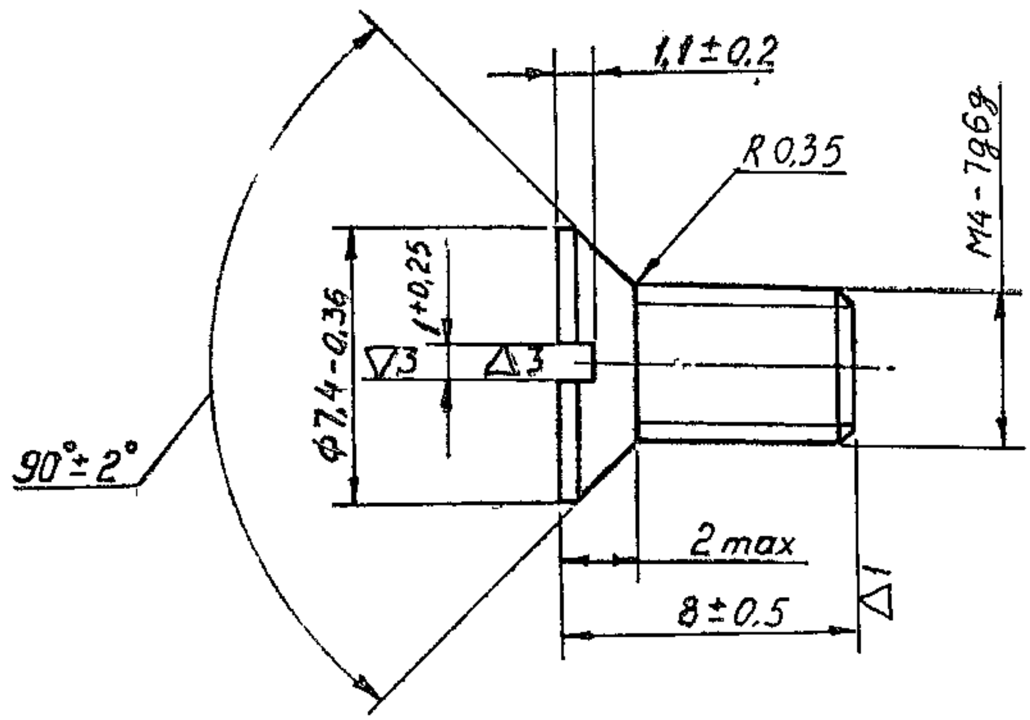

Designaion	*	Coating
7X-40811	016	Zinc-plated, 6microns thick, chromatizing
		Composition of solution for chromati-
		zing is as per И-252-78.

1. Maximum mis-alignment of head and slot axes with respect to body axis is 0.3mm.

2 Technical requirements are as per GOST 1759-70.

Copy is taken from GOST 17475-72.

127
I-615

7X-4081

SNO	SHT	DOC NO	SIGN	DATE
DRAWN		PRASAD	Prasad	22 12 84
EDT, CHKD		A K DOBEY	[illegible]	[illegible]
F/M, DC		S RNAIR	[illegible]	19.1.85
DIV.OFFR		A.K.KUNDU	AK.	15.2.85
		NAME	SIGN	DATE

SCREW
M4-7g6gx8 36
GOST 17475-72

Steel 10 GOST 1050-74

SHEET	WEIGHT	SCALE.
	0,84g	5:1
	TOTAL SHEETS	

ORDNANCE FACTORY PROJECT HYDERABAD

8X-1497

R. 80 √(√)

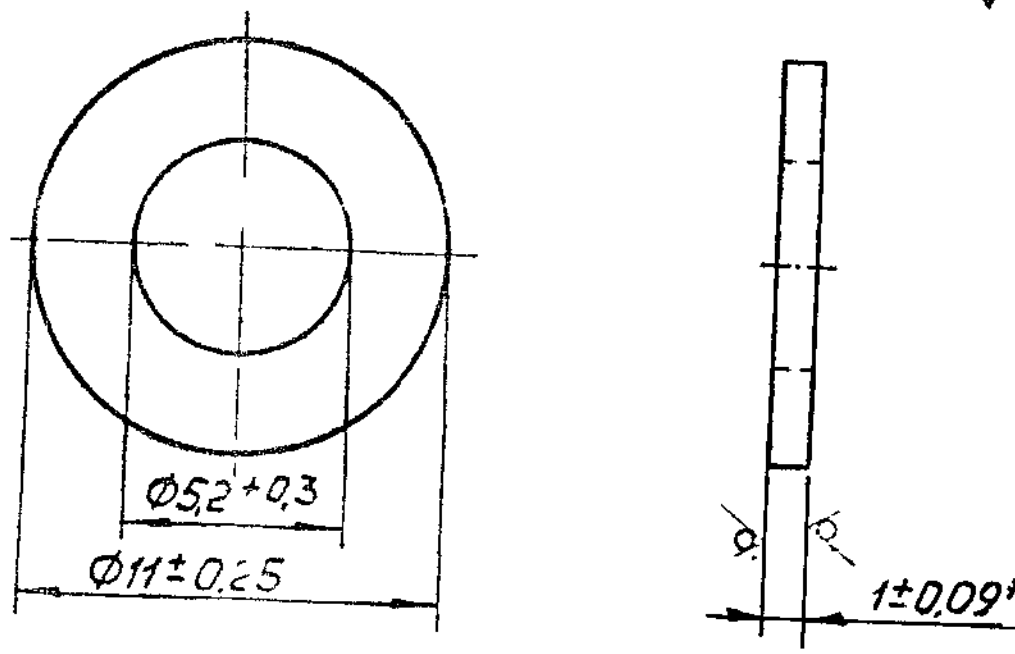

DESIGNATION.	COATING.
8X-1497.	Zinc-plated ,6 microns thick, chromatizing. Composition of solution for chromatizing is as per И-252-78,.

* Dimension is given for reference.

123
I-615

ECKD

8X-1497

SNO SHT	DOC NO	SIGN	DATE
DRAWN	R.H.PRASAD		24 12 84
EDT,CHKD	D K JAIN		29 12 84
F/M,D.C.	S R NAIR.		18 1 85
DIV.OFFR	A.K.KUNNU		15 2 85
	NAME	SIGN	DATE

WASHER.

Sheet Б 10 ГОСТ 19904-74
4-II 10 ГОСТ 16523-70.

SHEET	WEIGHT	SCALE
Б	0,62 g	5:1

TOTAL SHEETS

ORDNANCE FACTORY PROJECT HYDERABAD

8X-1541

▽4(▽)

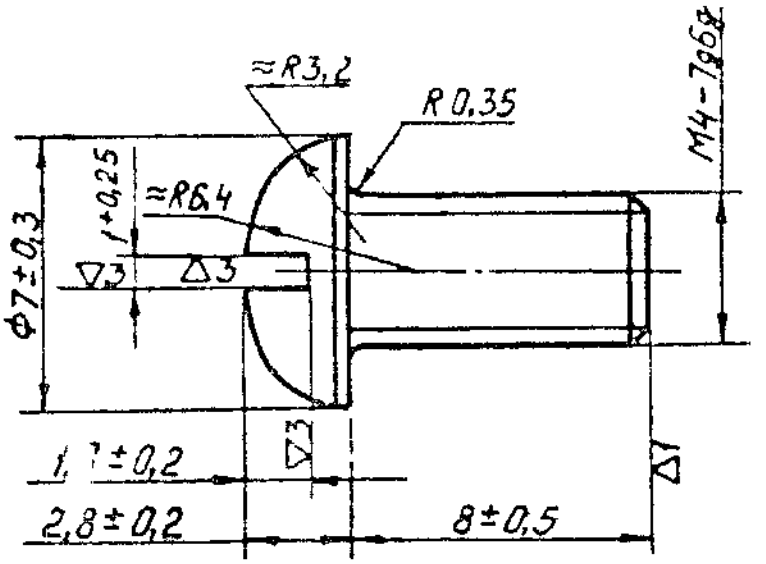

DESIGNATION	*	COATING.
8X-1541.	016	Zinc-plated, 6 microns thick . chromatizing Composition of solution for chromatizing is as per И-252-78.

1 Maximum misalignment of head and slot axes with respect to body axis is 0 3mm.

3. Technical requirements are as per GOST 1759-70.

124
I-615

Copy is taken from GOST 17473-72.

8X-1541

SNO	SHT	DOC NO	SIGN	DATE
DRAWN		R.H.PRASAD.		24 12.84
EDT&CHKD		D K JAIN		29 12 84
F/M,D.C.		S.R.NAIR.		18 1 85
DIV.OFFR		A.K.KUNDU		15-2-85
		NAME	SIGN	DATE

SCREW
M4-7g6g x 8.36 *
ГОСТ 17473-72.

Wire 3.45 - 10
ГОСТ 5663-79.

SHEET	WEIGHT	SCALE
	Б 1,186г	5:1

TOTAL SHEETS

ORDNANCE FACTORY
PROJECT
HYDERABAD

АК8.735.008

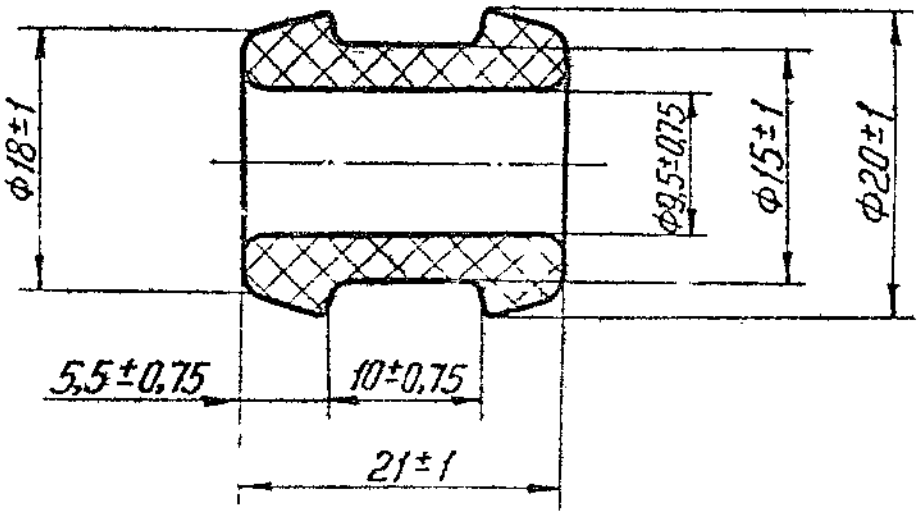

1 Rouning off radii are 1mm

2 Dimensions are provided with tool

3 Mark on the label

4 Other technical requirements are as per TY 005216-75

Восстановлен с подлинника

7129

75

152
I-615

ЕСКД

АК8.735.008

SNO	SHT	DOC NO	SIGN	DATE
DRAWN		PRASAD	prasad	26 12 84
EDT,CHKD		[illegible]	[illegible]	[illegible]
F/M,D.C.		S R NAIR	[illegible]	18 1 85
DIV.OFFR		A.K.KUNDU	[illegible]	15.2.85
		NAME	SIGN	DATE

SHOCK-ABSORBER

Rubber 98-1,
TY 005216-75

SHEET	WEIGHT	SCALE.
		TOTAL SHEETS

ORDNANCE FACTORY
PROJECT
HYDERABAD

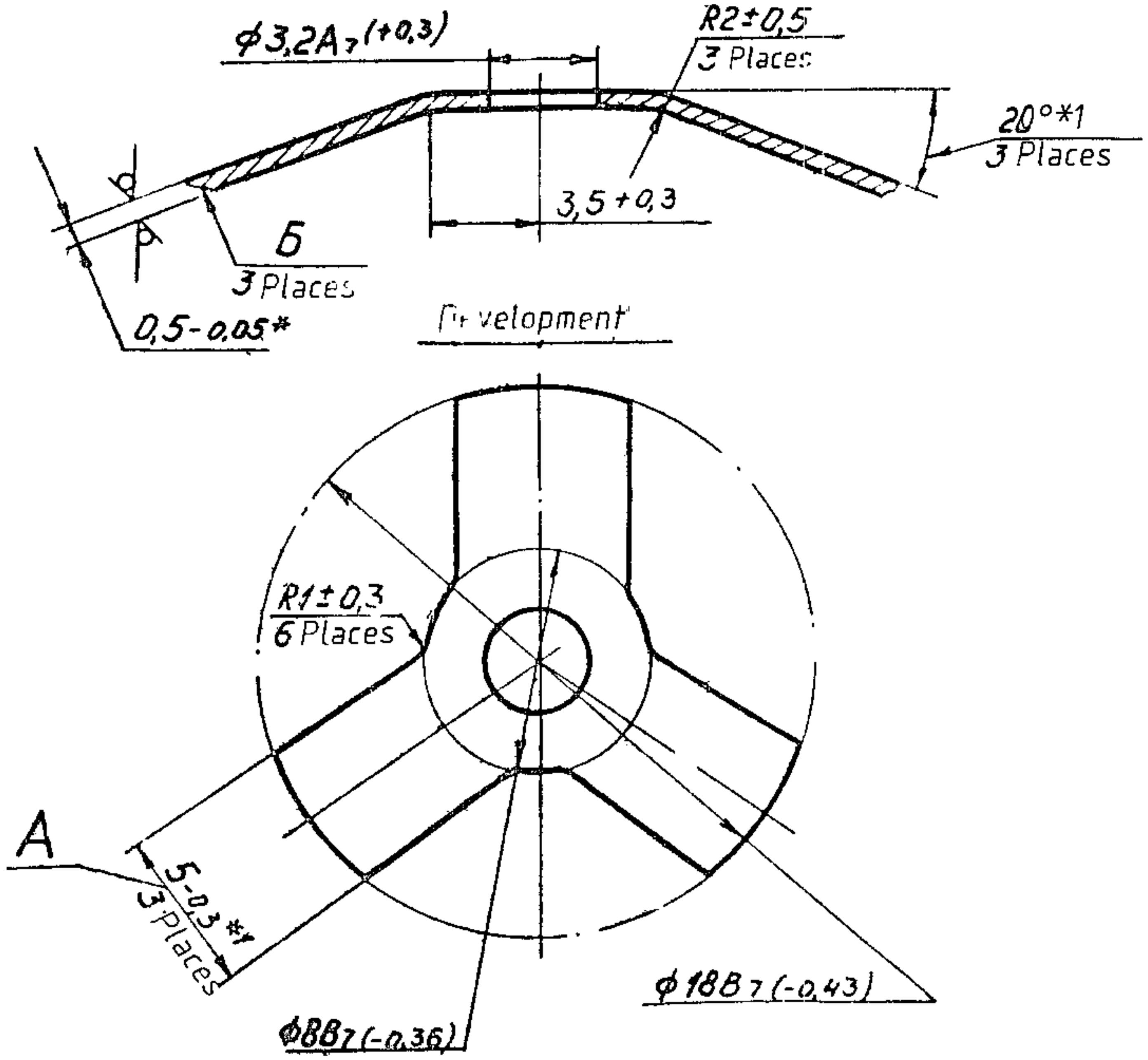

Designation	Coating
Вд 8 943 000	Chemically, oxidized/varnish ГФ -95 GOST8018-70(1)

1 HRC 42 to 47.

2 *Dimension is given for reference

3 *1 Dimension is for tool

4 Б- side of rounding due to stamping

5 Displacement of dimension A along the angle is ±1° from true position

6 It is allowed to use varnish МЛ -92 GOST 15865-70 instead of varnish ГФ-95 GOST 8018-70

157
I-615

Вд8.943.000

SNO SHT	DOC NO	SIGN	DATE
DRAWN	PRASAD	prasad	26 12 84
EDT. CHKD	Anand	[illegible]	[illegible]
F/M, DC.	S R NAIR	[illegible]	18 1 85
DIV. OFFR	A.K. KONDU	[illegible]	15.2.85
	NAME	SIGN	DATE

SPRING WASHER

Band Y8A-C-0 5
GOST 2283-79

SHEET	WEIGHT	SCALE
Б	0,5г	5:1

TOTAL SHEETS

ORDNANCE FACTORY PROJECT HYDERABAD

Восстановлен с подлинника верно:
Перв. примен. РН10.250
Справ. №
Инв. № подл. 21593 (Подп.) 3.10.77 10483

БК8.109.890

∇3 Unless otherwise specified

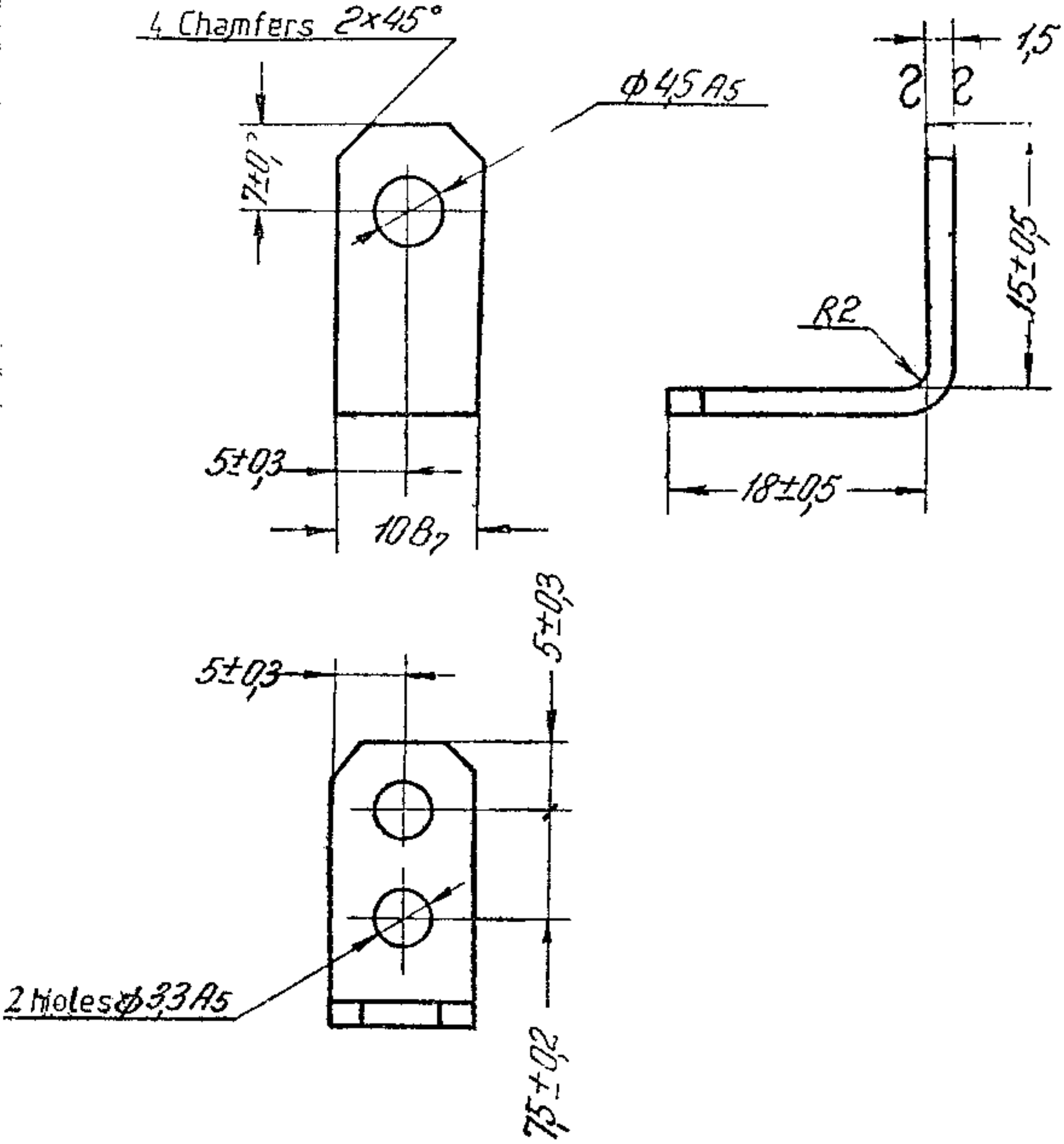

Radii of 2mm are allowed instead of 4 chamfers 2x45°

Coating Anodic oxidized, chromatizing

150 / I-615

SL.NO	SHEET	DOC.NO	SIGN	DATE		БК8.109 890
DRAWN BY		PRASAD	Prasad	26 12 84	ANGLE PIECE	
EDITED AND CHECKED BY		A.KUNDU				SHEETS / WEIGHT / SCALE
FOREMAN OF DC		S.R.NAIK		18.1.8		
DIVISIONAL OFFICER		A.K.KUNDU		15.1.85	Alloy AMГ 2M Sheet 1,5 GOST 12592-67	TOTAL SHEETS
		NAME	SIGN	DATE		ORDNANCE FACTORY PROJECT HYDERABAD

6K8542.258

▽3 (▽) Unless otherwise specified.

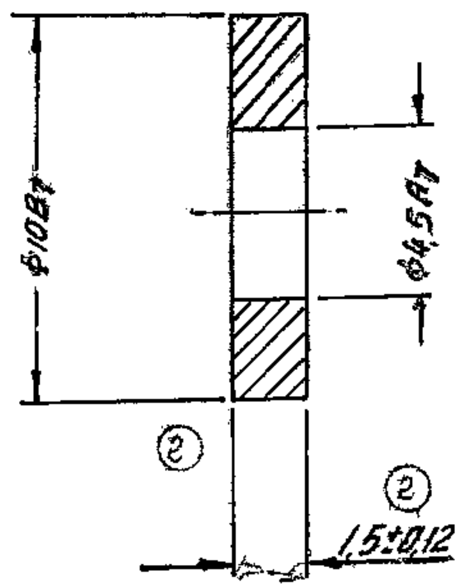

1 Dress the burrs

2 Stamping method accepted in sealed bundle

3 Coating Zinc-plated, 9microns thick, chromatizing

Material $\frac{\text{15 GOST 19904-74}}{\text{4-II-10 GOST 16523-70}}$ sheet

156 / I-615

SNO	SHT	DOC NO	SIGN	DATE
DRAWN		PRASAD	Prasad	26 12 84
EDT, CHKD				21-11-R
F/M, DC.		S RNAIR		18 1 85
DIV.OFFR		A.K.KUNDU		15.2.85
		NAME	SIGN	DATE

WASHER

See above,

SHEET	WEIGHT	SCALE.
6K8.542.258		
	TOTAL SHEETS	

ORDNANCE FACTORY PROJECT HYDERABAD

Weight [illegible] g SCALE= 5:1

6K8.683.000

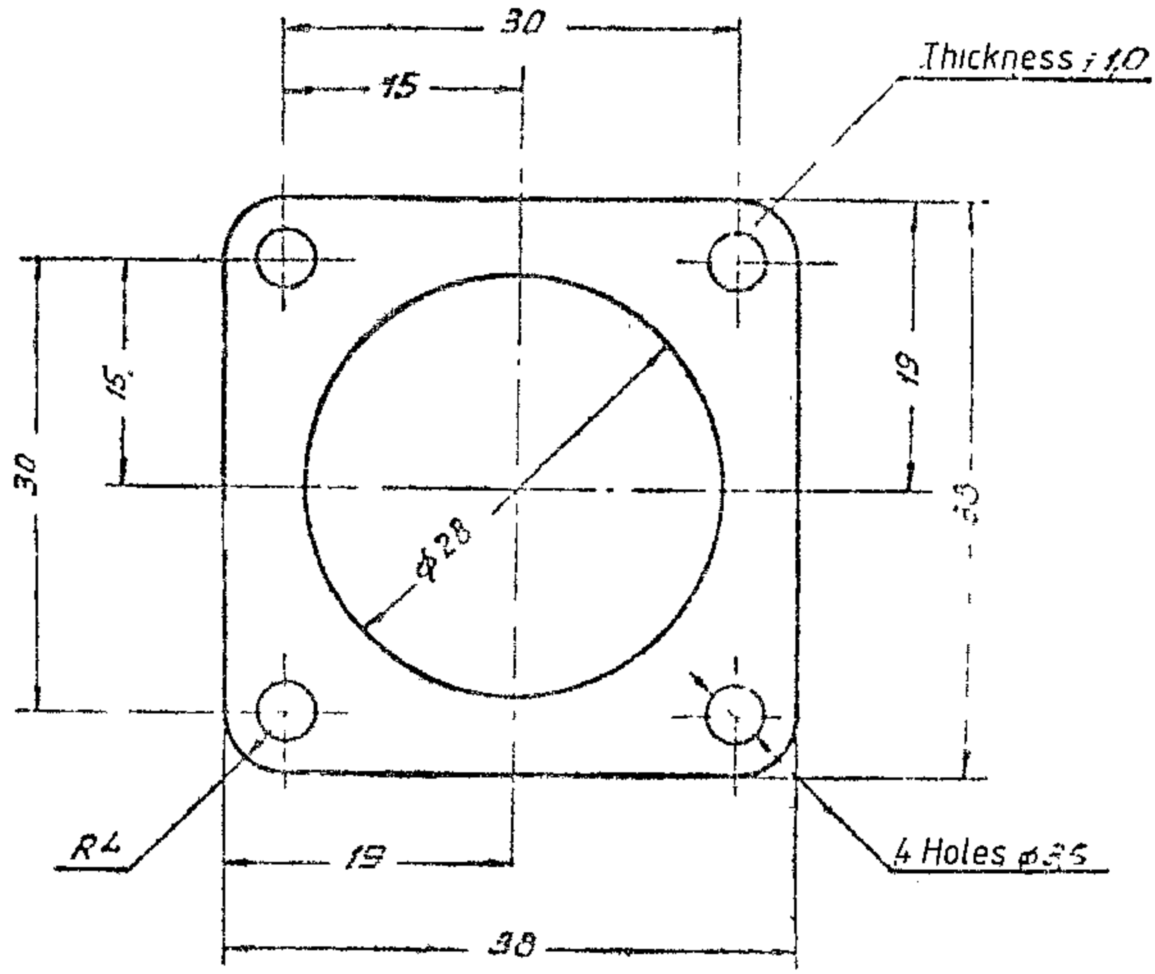

Stamping method acceptance in sealed bundle

151 / I-615

SLNO	SHEET	DOCNO	SIGN	DATE
DRAWN BY		PRASAD	prasad	26 12 84
EDITED AND CHECKED BY		[illegible]	[illegible]	28 12 84
FOREMAN OF DC		S R NAIR	[illegible]	18.1.85
DIVISIONAL OFFICER		A.K.KUNDU	[illegible]	15.2.85
		NAME	SIGN	DATE

GASKET

Rubber 9086
MPTY 38-5-1166-64

6K8.683.000

SHEETS	WEIGHT	SCALE

TOTAL SHEETS

ORDNANCE FACTORY PROJECT HYDERABAD

Взамен инв. № 2577 | Инв. № подл. 1-123 | Подп. и дата

БК8942 $\frac{244}{247}$

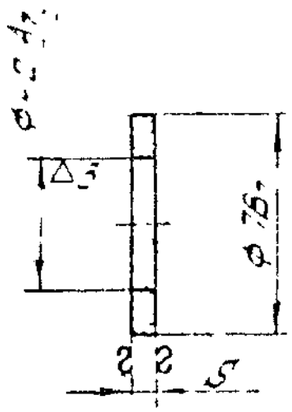

1 Stamping method accepted in sealed bundle,

2 Parts БК8.942 $\frac{244}{245}$ may be manufactured from band 10М-НТ-2-0-0,2 to 0,3 GOST503-71

3 Alternate material for part БК8 942 246 is band 08КП -М-Т-1-0 5 GOST503-71

Designation	Thickness S	Mass	Material	Coating
БК8 942 244	0,2 -0,03	0,0001	Band 10-М-НТ-2-0-0 2 GOST503-71	Zinc-plated 6microns thick, chromatizing
БК8 942.245	0,3 -0,04	0,0001	Sheet $\frac{0\ 3\ \text{GOST}19904\text{-}74}{4\text{-}II\ \text{GOST}16523\text{-}70}$	Zinc-plated, 6microns thick, chromatizing
БК8 942 246	0,5 -0,05	0,0002	Sheet $\frac{0\ 5\ \text{GOST}19904\text{-}74}{4\text{-}II\ \text{GOST}16523\text{-}70}$	Zinc-plated, 6microns thick, chromatizing
БК8 942.247	1 -0,09	0,0004	Sheet $\frac{1\ \text{GOST}19904\text{-}74}{4\text{-}II\ \text{GOST}16523\text{-}70}$	Zinc,-plated, 6microns thick, chromatizing

155
I-615

SLNO	SHEET	DOCNO	SIGN	DATE
DRAWN BY		PRASAD	Prasad	26 12 84
EDITED AND CHECKED BY				
FOREMAN OF DC		S RAM		18 1 85
DIVISIONAL OFFICER				15.2.85
		NAME	SIGN	DATE

WASHER

БК8.942 $\frac{244}{247}$

SHEETS	WEIGHT	SCALE
		5:1

TOTAL SHEETS

ORDNANCE FACTORY PROJECT HYDERABAD

BKY.024

▽3(▽)

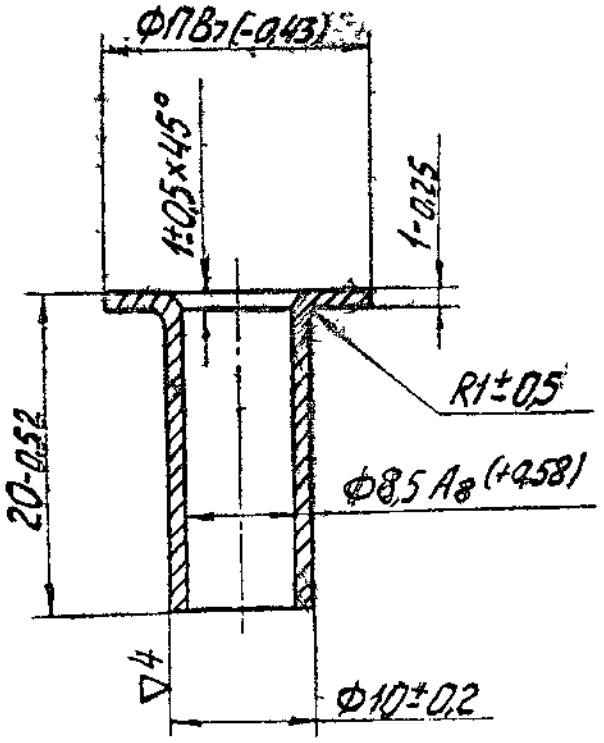

1. Alternate material:
   a) Steel 15 GOST 1050-74.
   b) Steel A12-H GOST 1414-75

2. Coating: Cadmium, 24 microns thick chromatizing. Area of coating 18cm^2.

93
I-615

ECKD

BKY.024

SNO	HT	DOC NO	SIGN	DATE
DRAWN		N Yesudas		22 12 84
EDT&CHKD		B. Sankar		31-12
F/M,DC		S R Nair		18 1 85
DIV.OFFR		A.K. KUNDU		15.2.85
		NAME	SIGN	DATE

HOLLOW RIVET

Steel 10 GOST 1050-74

SHEET	WEIGHT	SCALE
6	0.004	2:1

TOTAL SHEETS

ORDNANCE FACTORY PROJECT HYDERABAD

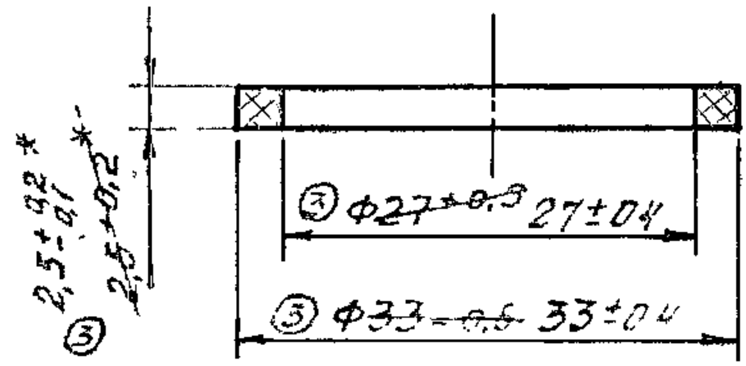

1 * Dimension is subjected to compulsory checking, other dimensions are provided with tools periodically checked not less than once quarterly.

2 Other Technical requirements are as per TY 005 216-75

104 / I-615

ЕСКД

BKY. 072

SNO	SHT	DOC NO	SIGN	DATE		SHEET	WEIGHT	SCALE
DRAWN		R.H PRASAD	[signature]	22 12 84	RING 253113.	Б	0.4gms.	2:1
EDT, CHKD		D K JAIN	[signature]	29 12 84		TOTAL SHEETS		
F/M, D.C.		S R.NAIR	[signature]	18 1 85		ORDNANCE FACTORY PROJECT HYDERABAD		
DIV.OFFR		A.K.KUNDU	[signature]	15.2.85	Rubber 98-I TY005.216-75			
		NAME	SIGN	DATE				

БР 15.012

Rz20 √(√)

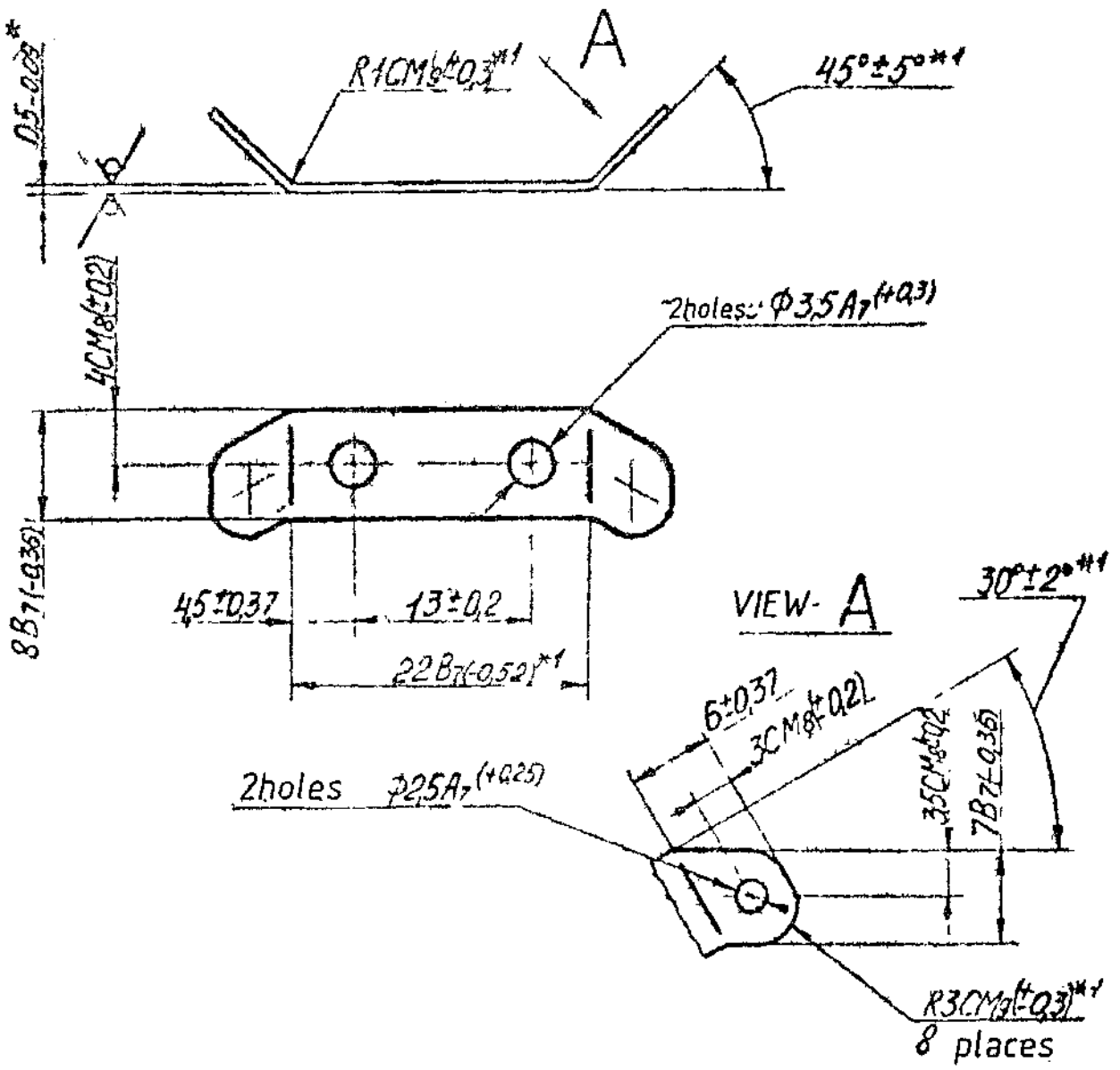

1 *Dimension is given for reference.

2. *1 Dimensions are provided with tool.

3. Coating .09

83
I-615

ECKJ

БР 15.012

SNO SHT	DOC NO	SIGN	DATE
DRAWN	N. Yesudas		22 12 84
EDT & CHKD	B. Sarma		11.12
F/M, DC	S R Nair		18 1 85
DIV.OFFR	A.K. KUNDU		15.2.85
	NAME	SIGN	DATE

BOARD

Sheet ДПРМ 05НДЛ63
GOST 931-78

SHEET	WEIGHT	SCALE
Б	1g	2:1

TOTAL SHEETS

ORDNANCE FACTORY PROJECT HYDERABAD

КС7750.006-3

Rz80 (√)

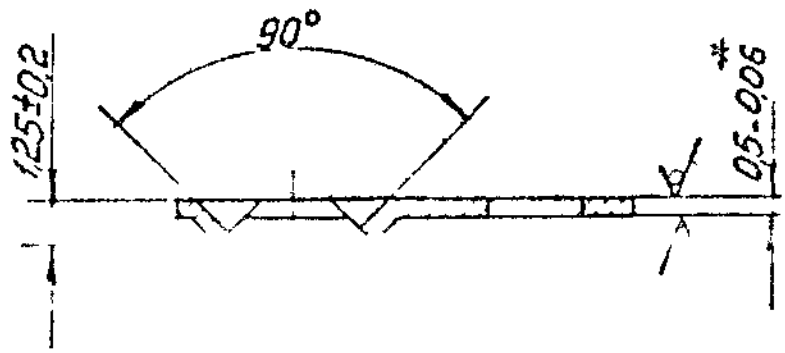

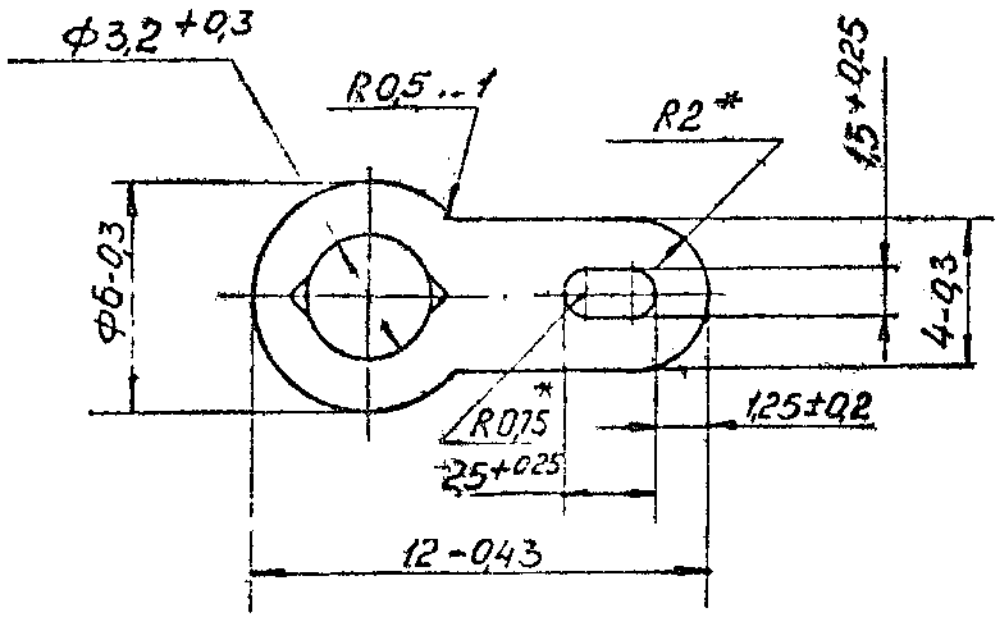

1 Dimensions are given for reference

2 Alternate material is sheet Л63М GOST931-70

3 Coating tin-lead(50)9
It is allowed to coat Cadmium,6microns thick

Copy is taken from standard НГ 0 775 000

153
I-615

KC7 750 006-3

SNO	SHT	DOC NO	SIGN	DATE
DRAWN		PRASAD	Prasad	26 12 84
EDT&CHKD		[illegible]	[illegible]	29.12.84
F/M,DC,		S.R.NAIR	[illegible]	18 1 85
DIV.OFFR		A.K.KUNDU	AK.	15.2.85
		NAME	SIGN	DATE

LUG

НГ 0 775 000 ТУ

Band Л63-М-Н-0,5
GOST 2208-70

SHEET	WEIGHT	SCALE
	0,171 г	5:1
TOTAL SHEETS		

ORDNANCE FACTORY
PROJECT
HYDERABAD

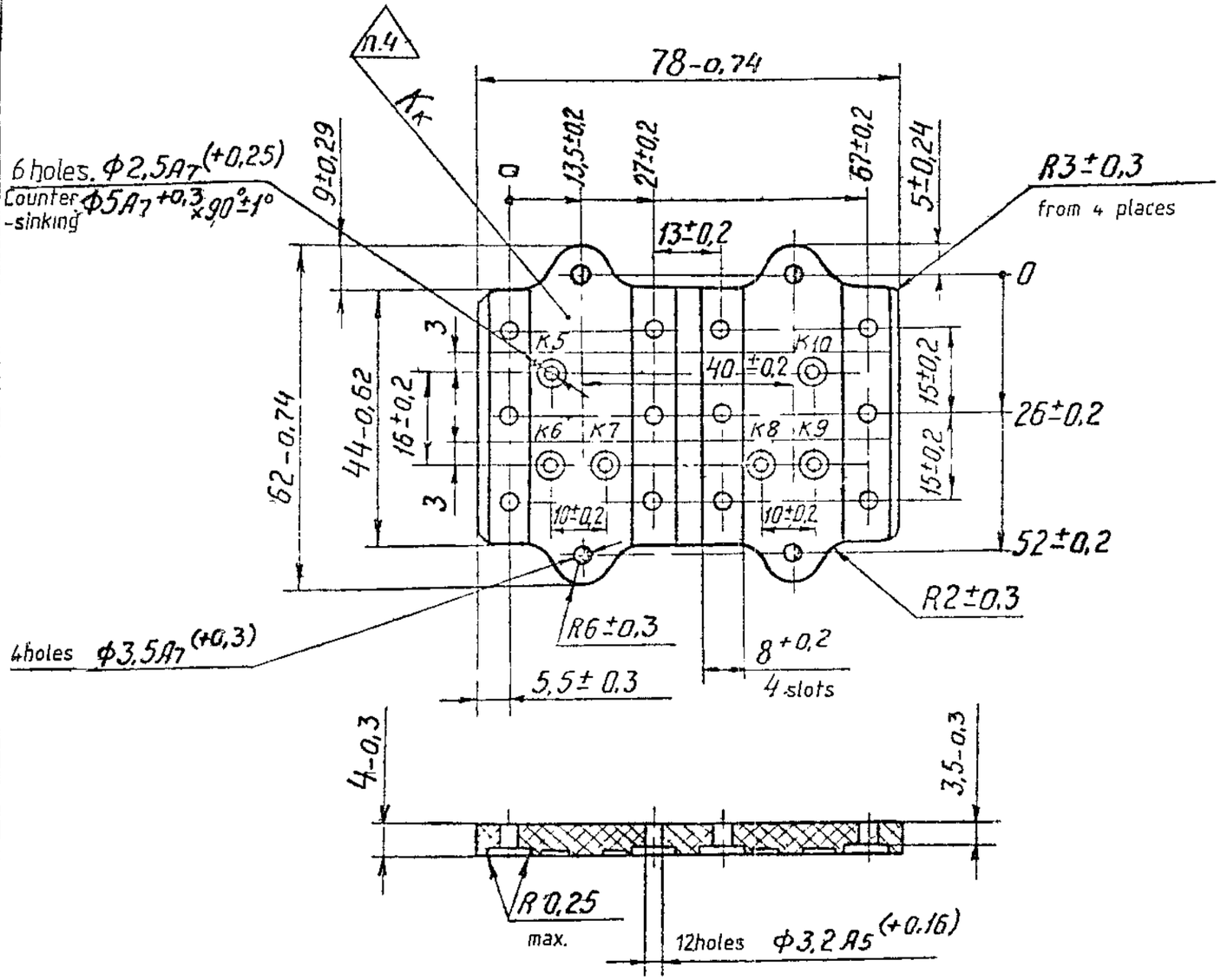

1. Drafts upto 2° toward increased dimensions.
3. Skewness of slots with respect to holes should not exceed 0.1mm.
4. Stamp
5. Alternate material is moulding material АГ-4С, GOST 20437-75, ДСВ-4-Р-2М, grade 0 GOST 17478-72.
6. Inscribe the digits and letters with projecting Type 2 as per H0.010.007 on 0.1 to 0.2mm.

80
I-615

КТ6.007

SNO	SHT	DOC NO	SIGN	DATE
DRAWN		N Yesudas		22.12.84
EDT&CHKD				
F/M, D.C.		S R Nair		18.1.85
DIV.OFFR		A.K.Kundu		15.2.85
		NAME	SIGN	DATE

BOARD

Moulding material АГ-4В
GOST 20437-75

SHEET	WEIGHT	SCALE
6	0,025	1:1

TOTAL SHEETS

ORDNANCE FACTORY
PROJECT
HYDERABAD

Восстановлен с подлинника

Подп. 25.11.86

№ 9386

KT6.008

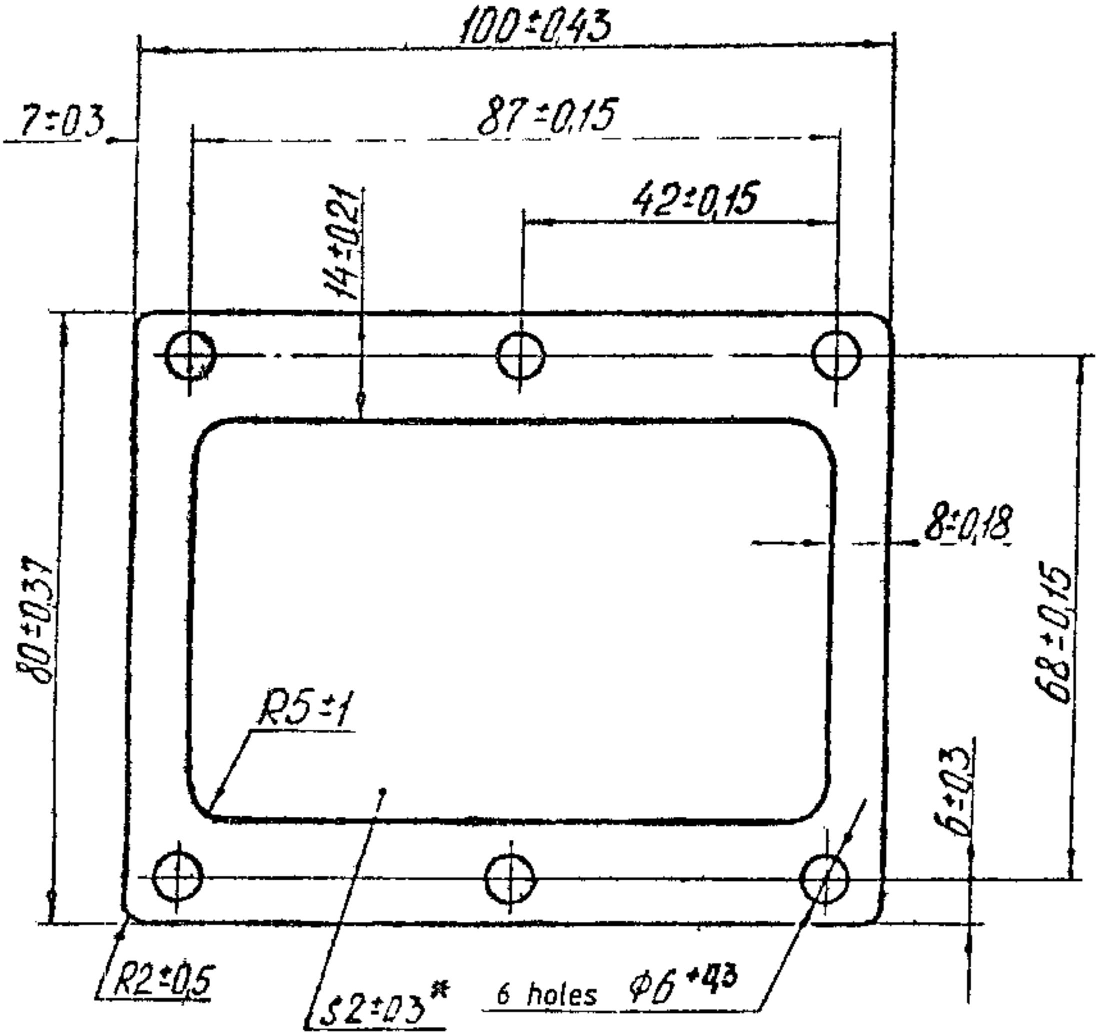

1 Alterante material $\frac{\text{sheet 25-4311-2}}{\text{rubber 4326-1}}$ Ty005216-75, it is allowed to use sheets as per Ty38005838-70

2 *Dimension is given for reference other. requirements are provided with tool

3 Other technical requirements are as per Ty005216-75

81 / I-615

KT6.008

SH	SHT	DOC NO	SIGN	DATE
DRAWN		N Yesudas		22.12.84
EDT CHKD		B Sarkar		21.12
F/M, DC		S.R.Nair		18.1.85
DIV.OFFR		A.K.KUNDU	AK	15.2.85

GASKET

Rubber 98-1
Ty005216-75

SHEET	WEIGHT	SCALE
Б	10g	1:1

TOTAL SHEETS

ORDNANCE FACTORY PROJECT HYDERABAD

КТ6.023

Rz 80 (V)

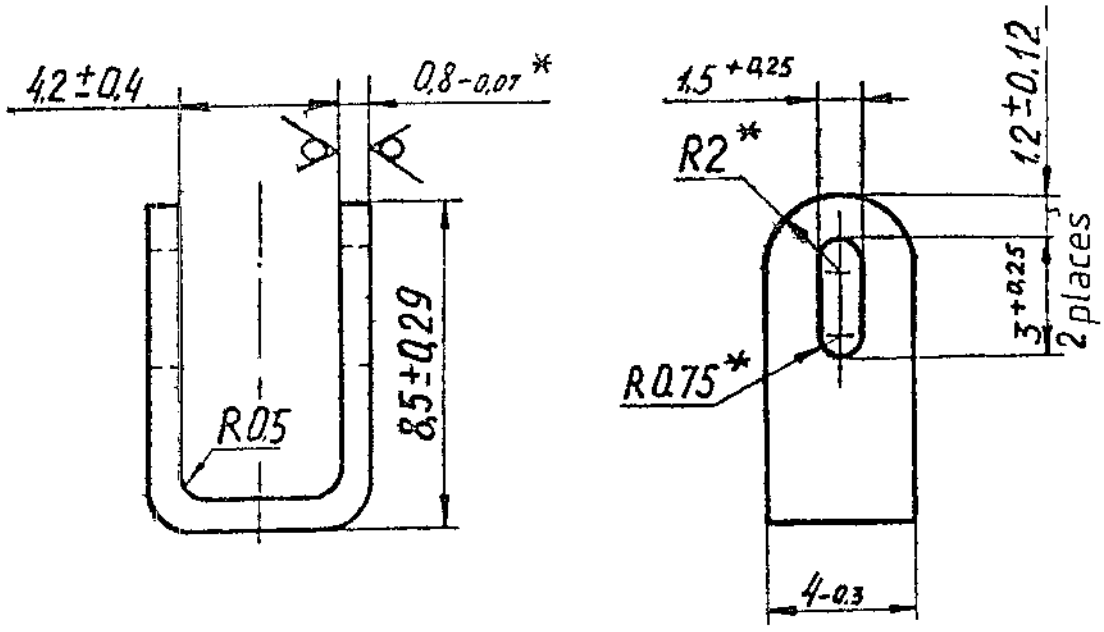

1. *Dimensions are given for reference.

2. Coating: Cadmium, 12 microns.

92
I-615

ЕСКД

КТ6.023

SNO	SHT	DOC NO	SIGN	DATE
DRAWN		N Yesudas		22.12.84
EDT&CHKD				
F/M,DC.		S.R.Nair		18.1.85
DIV.OFFR		A.K.KUNDU		15.2.85
		NAME	SIGN	DATE

LUG

Band ДПРНМ 0 8НД Л63
GOST 2208-75

SHEET	WEIGHT	SCALE.
	0,53g	5:1
	TOTAL SHEETS	

ORDNANCE FACTORY
PROJECT
HYDERABAD

Верно:

Восстановлен с подлинника

77 12388

Перв. примен. КТ-6

FORMAT	ZONE	REF. NO.	DESIGNATION	DESCRIPTION.	QTY	REMARKS
				Technical papers		
12			KT6 090CB	Assembly drawing		
				Parts		
11		1	P10T 118	Gasket	2	
				Other items		
		2		Transistor n215		
				ГЦ3 365 012ТУ	1	
				Materials		
				Wire МГШВ 0 35		
				ТУ16-505 437-73	0 18	M
				Sleeve ТВ-40-230		
				White ГОСТ19034-73		
		4		2x0,4	0,05	M
		5		3x0,4	0,03	M

57
I-615

S NO	SHT	DOC NO.	SIGN.	DATE
DRAWN BY		Gopal		21/1
CHECKED		D. K. JAIN		28.12.8
F/M DC.		S R NAIR.		18/18
DIV OFFR		A.k.KUNDU		16.2.85
		NAME.	SIGN.	DATE

KT6 090

TRANSISTOR

SHT.NO.	TO.NO.OF.SH
	1

КТ6.090СБ

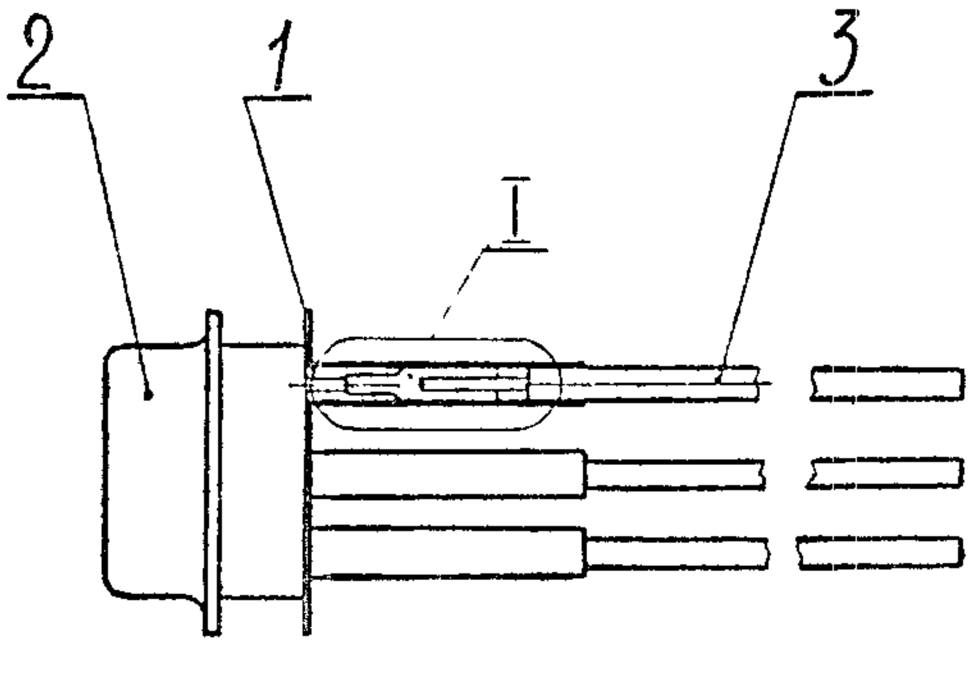

1 Thickness of pack of parts RefNo 1 is65 to 100mm
2 Use solder ПОСК50-18 GOST21930-76 with fluxФКСп OST 4 ГО.033 000
3 Bend plane portion of leads of transistors,Ref,No 2 in the form of chute
4 Perform wiring in complaince with requirements of technical specifications СИЗ 365 012ТУ and instructionsШ1-80.

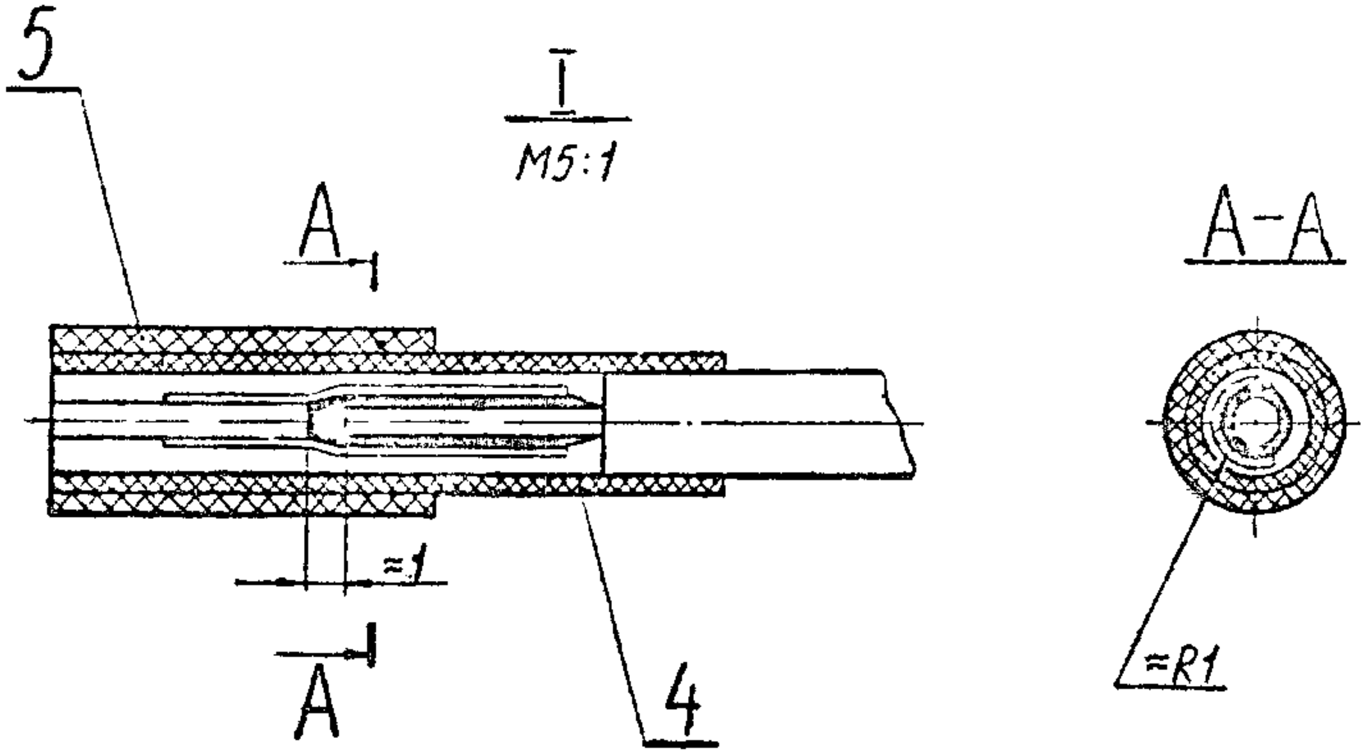

58 / I-615

ЕСКД

КТ6.090 СБ

SNO SHT	DOC NO	SIGN	DATE
DRAWN	S.Gopal		22/12
EDT,CHKD	D K JAIN		28.12.87
F/M,DC	S R Nair		18/85
DIV.OFFR	A K.KUNDU		16.2.8
	NAME	SIGN	DATE

TRANSISTOR

ASSEMBLY DRAWING

SHEET	WEIGHT	SCALE
5	15г	1:1

TOTAL SHEETS

ORDNANCE FACTORY PROJECT HYDERABAD

M11-41872

▽4 (▽)

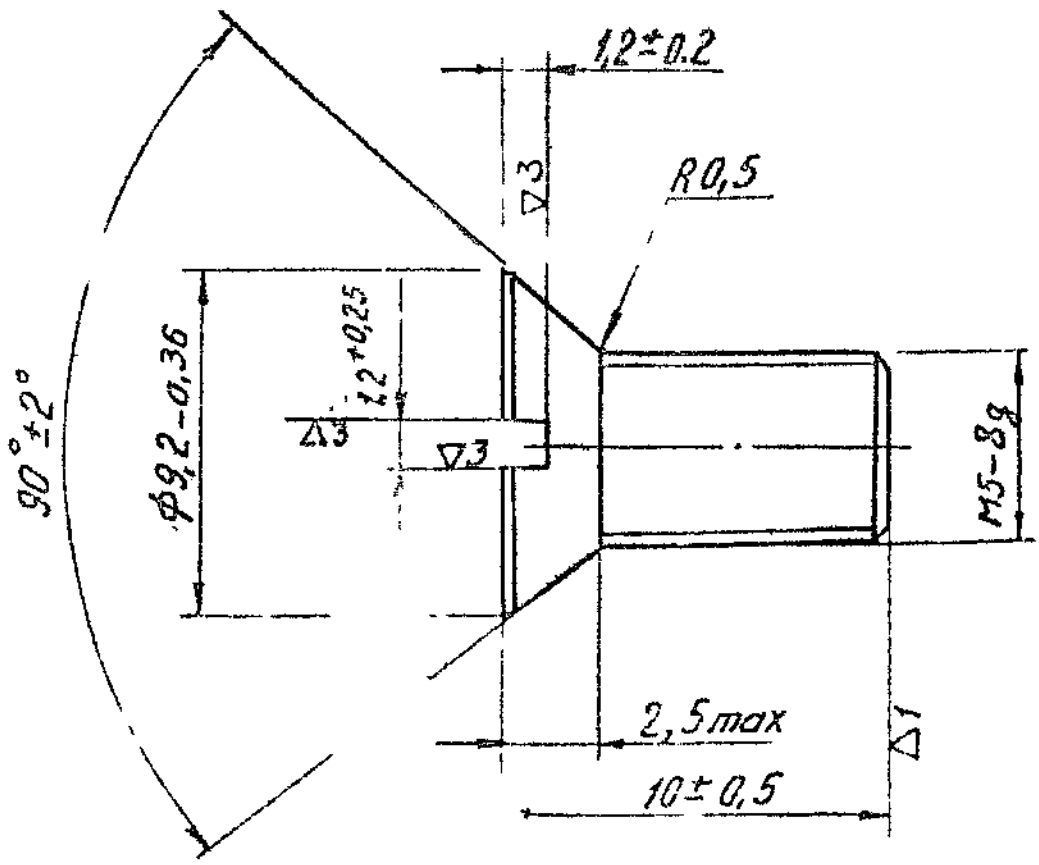

Designation	*	Coating
M11-41872	D16	Zinc-plated, 6microns thick, chromatizing. Composition of solution for chromatizing is as per Ч-252-78.

1 Maximum misalignment of axes of head and slot with respect to axis of body is 0 3mm

2 Technical requirements are as per GOST 1759-70

Copy is taken from GOST 17475-72

149
I-615

M11-41872

SNO	SHT	DOC NO	SIGN	DATE
DRAWN		PRASAD	Prasad	24 12 84
EDT,CHKD		AKOUSSA	[illegible]	[illegible]
F/M,DC.		S RNAIR	[illegible]	16 1 85
DIV.OFFR		A.K.KUNDU	[illegible]	15-2-85
		NAME	SIGN	DATE

SCREW M5x10 36
GOST17475-72

Steel10 GOST 1050-74

SHEET	WEIGHT	SCALE
	G 1,692	5:1

TOTAL SHEETS

ORDNANCE FACTORY PROJECT HYDERABAD

P6T 135

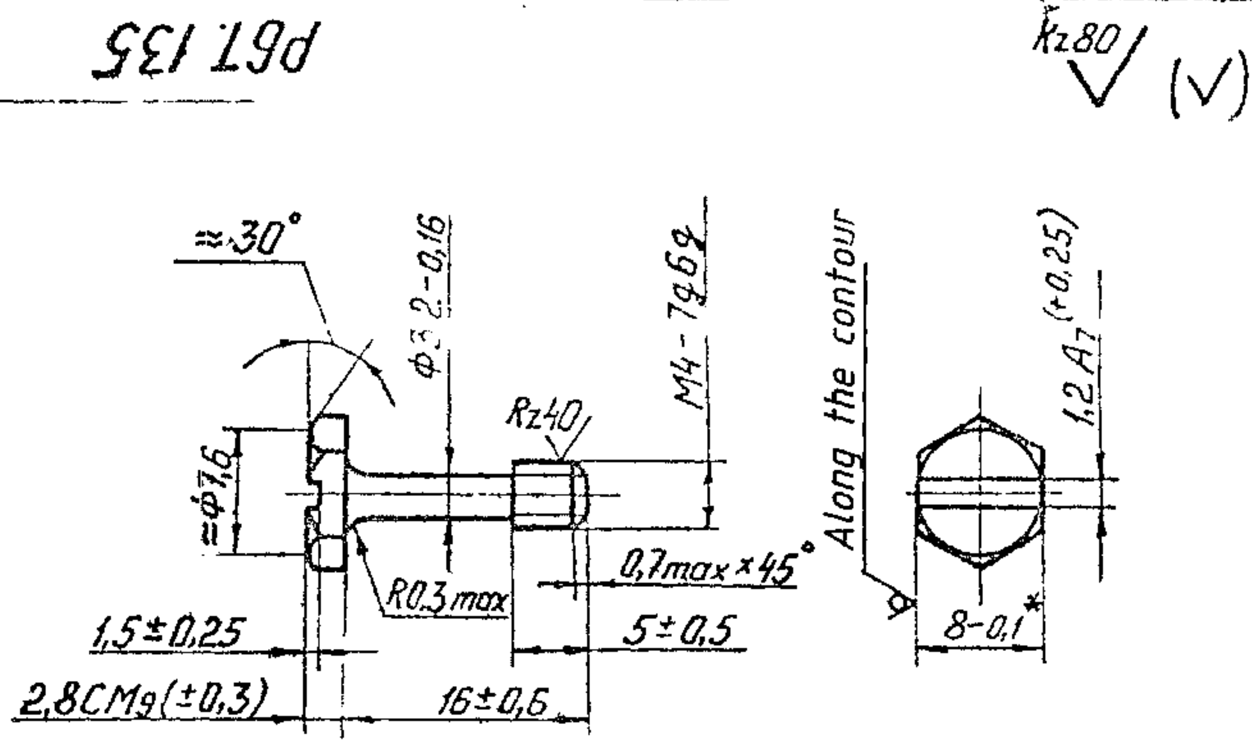

DESIGNATION	COATING.
P 6T.135.	Zinc-plated, 6 microns thick, chromatizing. Composition of solution for chromatizing is as per И-252-78.

1. Alternate material is steel 10, steel 15, GOST 1050-74.
2. * Dimension is given for reference.
3. Blunt ribs R≈0 5mm
4. Maximum mis-alignment of head and slot axes with respect to body axis is 0 3mm.

112 / I-615

P6T.135

SNO/SHT	DOC NO	SIGN	DATE
DRAWN	R.H.PRASAD	[signature]	24.12.84.
EDT/CHKD	D K JAIN	[signature]	29.12.84
F/M, DC	S.R.NAIR.	[signature]	18.1.85
DIV.OFFR	A.K.KUNDU	[signature]	15.2.85
	NAME	SIGN	DATE

SPECIAL BOLT.

Hexahead bar 8-4 ГОСТ 8560-78. A12-Н-В ГОСТ1414-75.

SHEET	WEIGHT	SCALE
6	2,5g	2:1

TOTAL SHEETS 15

ORDNANCE FACTORY PROJECT HYDERABAD

Восстановлен с подлинника. Верно.

P6T.156

P10T.019

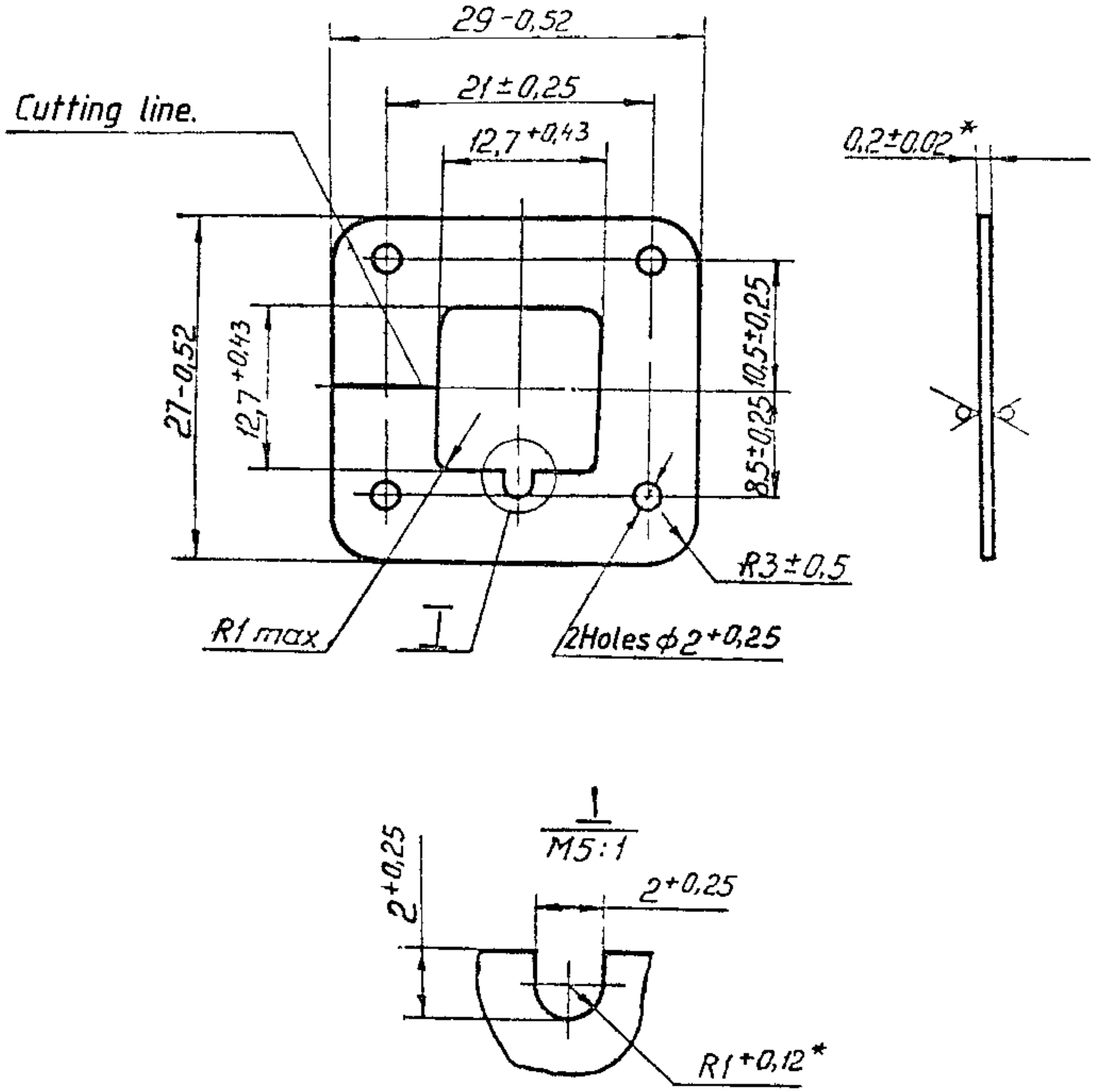

1. *Dimensions are given for reference.

DESIGNATION.	COATING.	PERMISSIBLE COATING.
P 6 T.156	Varnish ГФ - 95 GOST 8018-70.	Varnish МЛ - 92 GOST 15865-70.

115
I-615

ЕСКД

P6T.156

SNO. SHT	DOC NO	SIGN	DATE
DRAWN	R.H.PRASAD.		24.12.84
EDT. CHKD	D.K.JAIN		9.12.84
F/M, DC.	S.R.NAIR.		18.1.85
DIV.OFFR	A.K.KUNDU		15.2.85
	NAME	SIGN	DATE

WASHER

Board ЭВС 0.2
ГОСТ 2824-75.

SHEET	WEIGHT	SCALE
	Б 0,00098	2:1

TOTAL SHEETS

ORDNANCE FACTORY
PROJECT
HYDERABAD

24233 (Подп.) 24.1.78 7908

FORMAT	ZONE.	REF. NO.	DESIGNATION	DESCRIPTION.	QTY	REMARKS
				Technical papers		
11			P10T 019СБ	Assembly drawing		
				Parts		
12		1	P10T 129 1	Frame	1	
11		2	P10T 160	Terminal	4	
			Variable data for vartions -			
				P10T 019		
				Parts		
11		3	P6T 156	Washer	1	

64/I615

64
I-615

P10T 019

S NO	SHT	DOC NO.	SIGN.	DATE
DRAWN BY		S.Gopal	S Gopal	22/12
CHECKED		D K JAIN		28 12 8
F/M DC.		S R.NAIR.		18/8
DIV OFFR		A.K.KUNDU	AK.	16.2 8
		NAME.	SIGN.	DATE

FRAME

SHT.NO.	TO.NO.OF.SHT
	1

Р10Т.019СБ

Р10Т.019

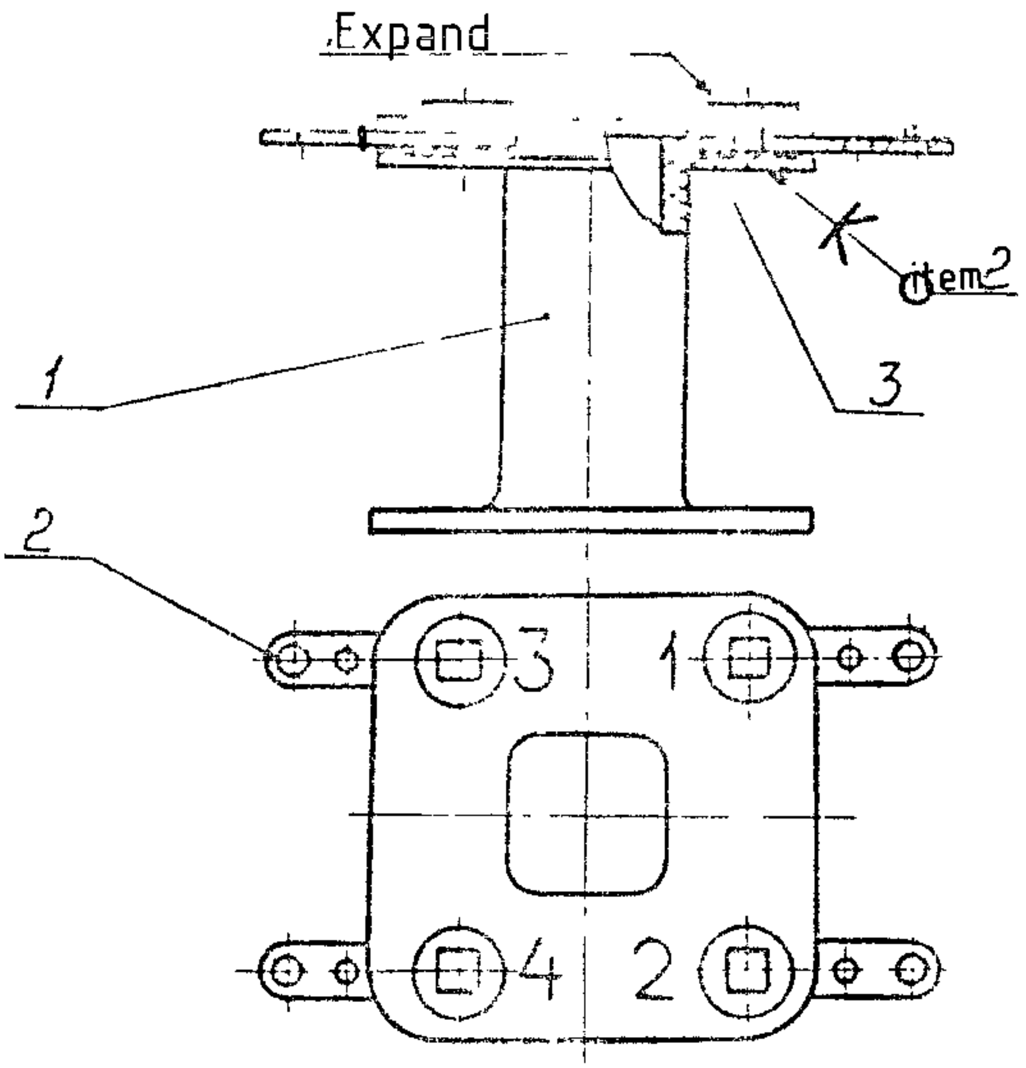

1. Slipping of terminals, Ref No 2 is not allowed
2. Cement the washer, ref No 3 to the frame, Ref,No1. with adhesive БФ-4, GOST12172-74

Восстановлен с подлинника №1 Верно

65 / I-615

ЕСКД

1854

65 / I.615

Р10Т.019СБ

SNo	SHT	DOC NO	SIGN	DATE
DRAWN		S.Gopal	S.Gopal	22/12
EDT, CHKD		D.K JAIN	[illegible]	28.12.83
F/M, DC.		S R.Nair	[illegible]	18.1.83
DIV.OFFR		A.K.KUNDU	AK.	16.2.00
		NAME	SIGN	DATE

FRAME

ASSEMBLY DRAWING

SHEET	WEIGHT	SCALE
Б		2:1

TOTAL SHEETS

ORDNANCE FACTORY PROJECT HYDERABAD

FORMAT	ZONE	REF. NO.	DESIGNATION.	DESCRIPTION.	QTY	REMARKS
				Technical papers		
22			P10T.027CB	Assembly drawing.		
				Parts		
11		3	P10T 130	Board	30	max.quantity32pieces
11		5	P10T 131	Board	30	max.quantity 32pieces
			Variable data for	version		
				P10T 027		
				Assembly units		
11		6	P10T 028	Transformer coil	1	
				Parts		
12		7	P10T.140	Clamp	1	

66/I615

66
I-615

P10T 027

S NO	SHT	DOC NO.	SIGN.	DATE
DRAWN BY		S Gopal		22/12
CHECKED		D K JAIN		28 12 85
F/M DC.		S R NAIR.		18 1 86
DIV.OFFR.		A.K.KUNDU		16.2.85
		NAME.	SIGN.	DATE

TRANSFORMER

SHT.NO.	TO.NO.OF.SHT
1	2

FORMAT	ZONE	REF. NO.	DESIGNATION.	DESCRIPTION.	QTY	REMARKS
64		9	P10T.271	Textolite wedge A0,5		
				GOST2910-74		
				9 5±0.7MMX26±1MM	2	0.5g
b4		10	P10T.272	Textolite gasket 0,5		
				GOST2910-74		
				9,5±0 7MMx10±0,7mm	4	0,5g

67/I615

67
I-615

P10T.027

S NO	SHT	DOC NO.	SIGN.	DATE
DRAWN BY		S.Gopal		22/12
CHECKED		D.K.JAIN		28.12.8
F/M DC.		S.R.NAIR.		18/8
DIV OFFR.		A.K.KUNDU		16.2.85
		NAME.	SIGN.	DATE

TRANSFORMER

SHT.NO.	TO.NO.OF.SH
2	2

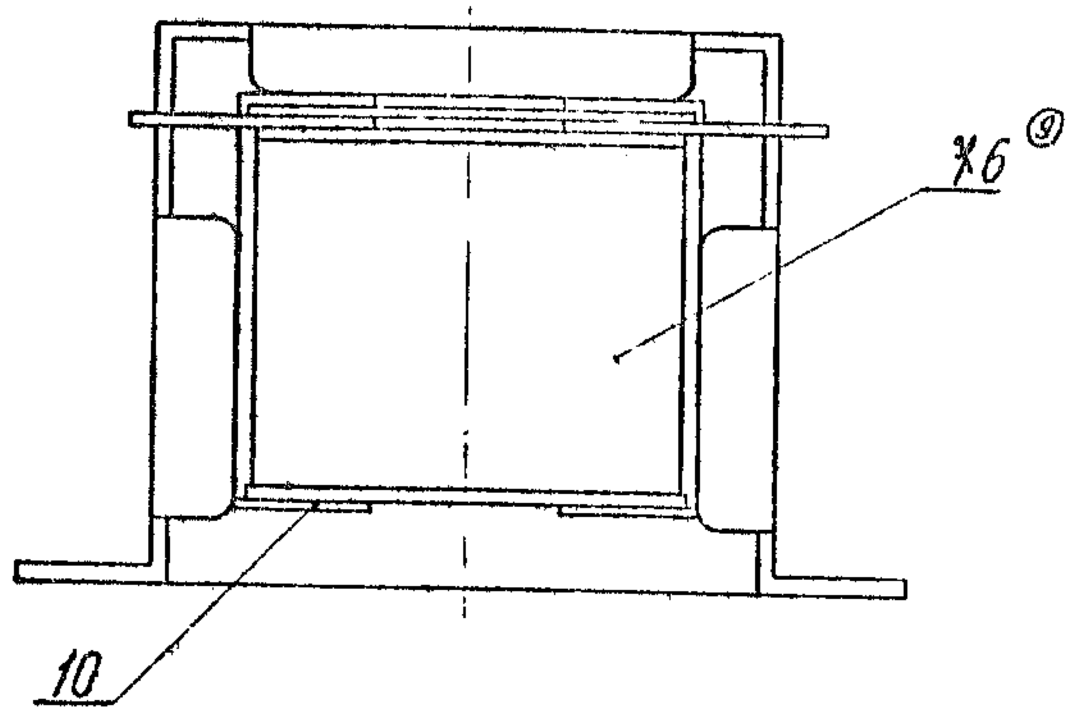

① Winding diagram.

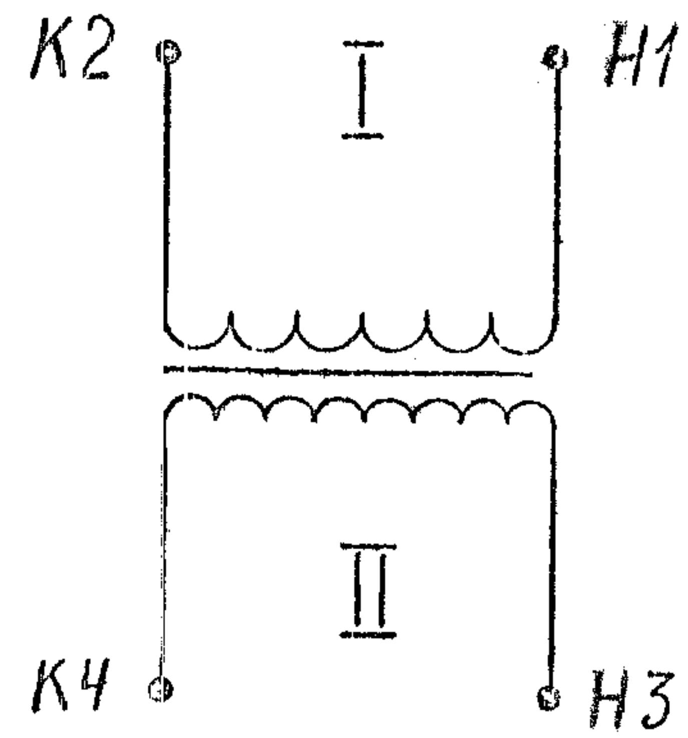

1. Provide dimension A with by using required quantity of parts,Ref,No 35 If there is gap between the iron and frame eleminates it with wedge Ref No.9.
2 Axial shifting coil is not allowed eleminate shifting if any with gasket, RefNo 10 on adhesiveБФ-4GOST12172-74
3 After assembly of iron press the clamp, RefNo,7 and all units two times coat allows with varnish ЭЛ-730 GOST20824-75 In doing so protect the lugs to be soldered from varnish coatin g
4. Insulation between the winding and body should with stand the break down voltage of500V,50HZ for 1sec.
5. Insulation resistance between the winding and between each windingand body should be not less than100megaohms in normal climatic conditions
6 Open circuit current of secondery winding should not exceeding 10mA. at test voltage of 40V, 400Hz
7. Other technical requirements are as per Ty OAT.599.004.

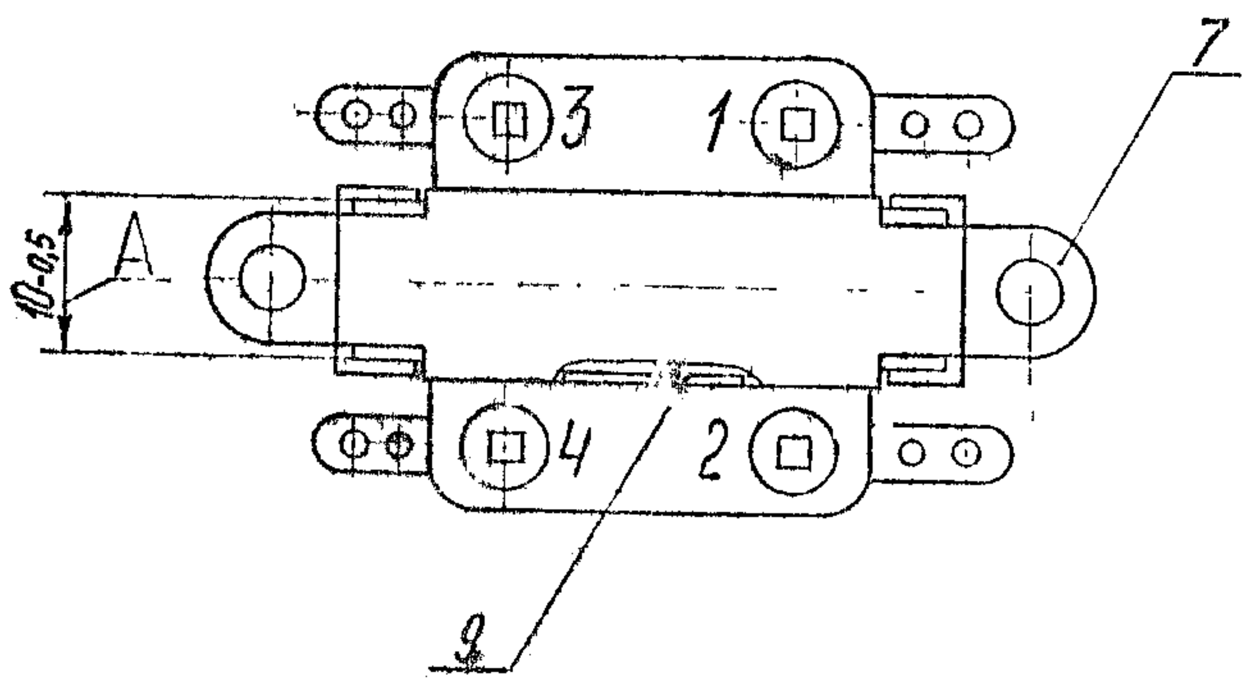

		Data for winding		
No of windings	No of terminals	No of turns	Grade and diameter of wire	Resistance of winding, ohms.
I	1-2	30-1	ПЭЛ ϕ1 16	
II	3-4	2000^{+50}	ПЭВ-2 ϕ0 1	$230\pm^{10}_{20}$

② Assembly of core stach

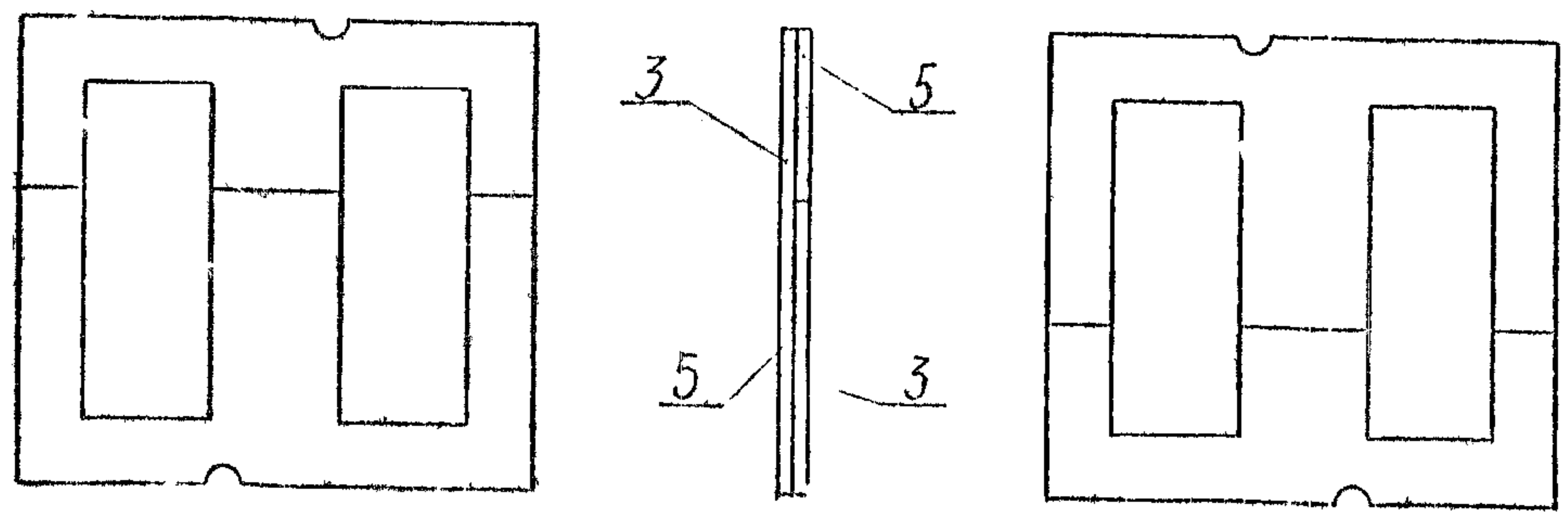

68 I-615

ЕСКД

P10T 027СБ

SNO	SHT	DOC NO	SIGN	DATE
DRAWN		S Gopal		22/12
EDT,CHKD		D K JAIN		28.12.83
F/M,DC		S R Nair		18.1.83
DIV.OFFR		A.K KUNDU		16.2.83
		NAME	SIGN	DATE

TRANSFORMER
ASSEMBLY DRAWING

SHEET	WEIGHT	SCALE
		2 1

TOTAL SHEETS

ORDNANCE FACTORY PROJECT HYDERABAD

FORMAT	ZONE	REF. NO.	DESIGNATION.	DESCRIPTION.	QTY	REMARKS
				Technical papers		
12			P10T.028СБ	Assembly drawing		
				Parts		
b4		3	P10T281	Gasket		
				varnished cloth ЛШМ 105-0,1		
				GOST2214-78		
				a-10±1mm, b-8±1mm	2	
b4		4	P10T.282	Gasket		
				varnished cloth ЛШМ-105-0,1		
				GOST2214-78		
				a=25±1mm, b=30±1mm.	1	
b4		5	P10T283	Gasket		
				varnished cloth ЛШМ-105-0,1		
				GOST2214-78		
				a=25±1mm. b=250±1mm	1	
b4		6	P10T 284	Gasket		
				Board БС0 2		
				GOST2824-75		
				a=24-0,5mm. b=111±0 2mm	1	

69/I615

69
I-615

S NO SHT	DOC.NO.	SIGN.	DATE
DRAWN BY	S Gopal	S. Gopal	22/12
CHECKED	D K JAIN		29 12 8
F/M DC.	S.R.NAIR.		18/8
DIV.OFFR.	A.K.KUNDU		16.2.85
	NAME.	SIGN.	DATE

P10T 028
TRANSFORMER
COIL

SHT.NO.	TO.NO.OF.SHT
1	4

FORMAT	ZONE	REF. NO.	DESIGNATION.	DESCRIPTION.	QTY	REMARKS
				Material		
		8		Wire П→Л-1.18		
				GOST2773-78	0024	Kg
		9		Wire П→Л-0.224		
				GOST2773-78	0006	Kg
		10		Wire П→ B-2-0.1		
				GOST7262-78	0 016	Kg
		11		Paper KOH2-22		
				GOST1908-77	0.8 M	B-28mm
		14		Thread lusterless "extra"		
				3-ply N10gradeI		
				GOST6309-73	0 5M	anycolou

70/I 615

70
I-615

S NO	SHT	DOC NO.	SIGN.	DATE
DRAWN BY		S Gopal	S. Gopal	27/1
CHECKED		D K JAIN		29 12 8
F/M DC.		S.R NAIR.		18/1/83
DIV OFFR.		A.K. KUNDU	AK.	16.2.85
		NAME.	SIGN.	DATE

P10T.028

TRANSFORMER COIL

SHT.NO.	TO NO.OF.SH
2	4

FORMAT	ZONE	REF. NO.	DESIGNATION.	DESCRIPTION.	QTY	REMARKS
			variable data for versions			
				P10T-0 28		
				Assembly units		
11		17	P10T 0.19	Frame	1	

71/1615

71
I-615

TRANSFORMER COIL

S NO	SHT	DOC NO.	SIGN.	DATE
DRAWN BY		S Gopal	S. Gopal	22/1
CHECKED		D K JAIN	[illegible]	29 DC
F/M DC.		S.R.NAIR.	[illegible]	18.1.85
DIV.OFFR.		A.K.KUNDU	[illegible]	16.2.85
		NAME.	SIGN.	DATE

P10T 028

SHT.NO.	TO NO.OF.SHT
3	4

72/1-615

P10T 028

Sheet
4

P1QT.028 C5

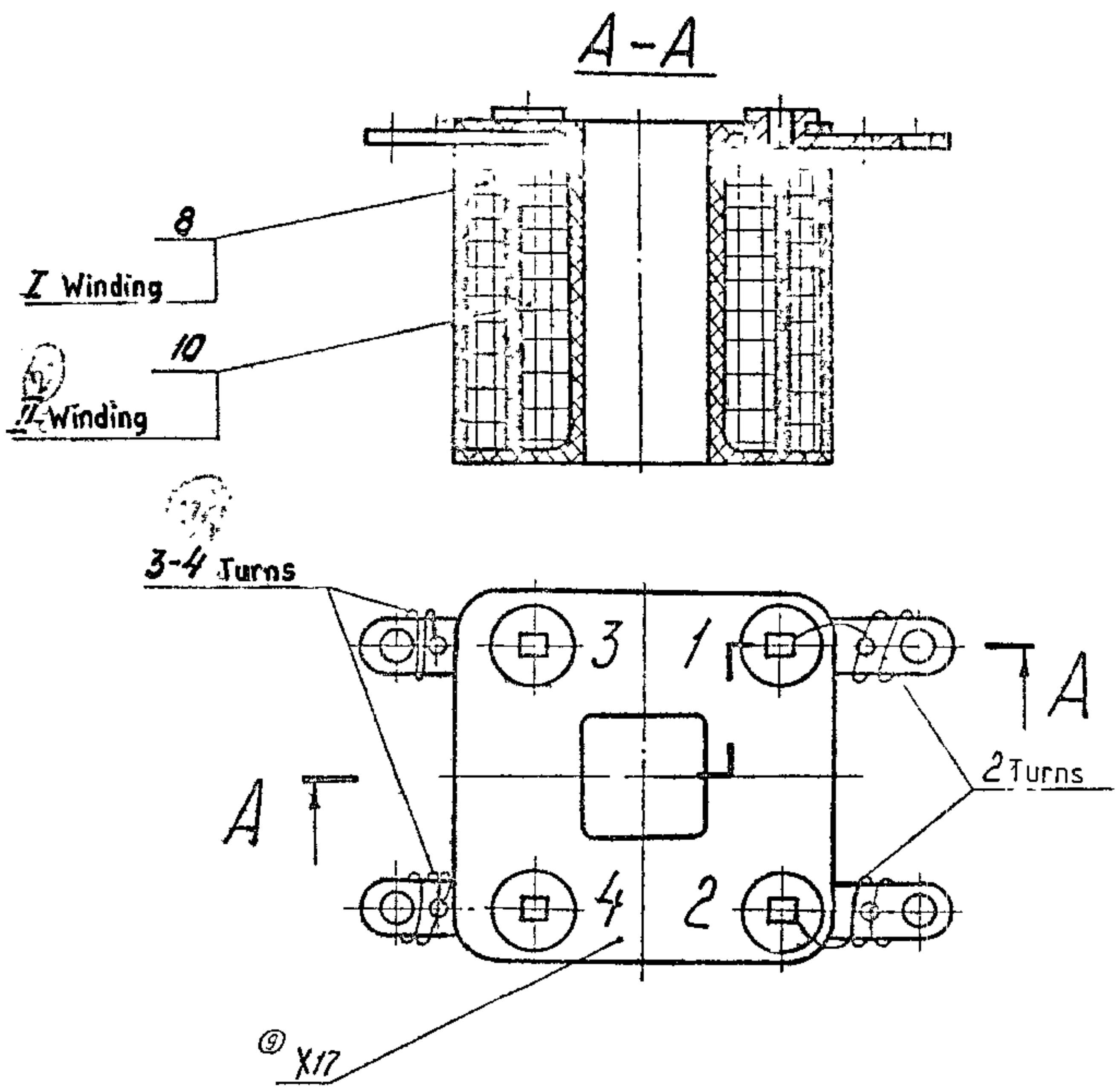

1, Carry out the winding II first 2 to 3 turns with wire, Ref No,9 then 2000+50 turns with wire ref No,10 and at the ends,10to12 turns with RefNo 9

2 carryout soldering using solder ПОССУ-40-2 GOST21930-76 with fluxФКСп OST4 ГО 033 000. Insulate soldered joints of windings with wireleads usial gasket,Ref,No,3

3 Winding are insulated from each other with gasket,Ref No,6

4 Begining and ends of windings should be lead out through holes in washer and to the lug as per diagram

5 Insulate the out side of coil with double layer of gasket Ref,No 5 Cement the ends of gasket with adhesive БФ-4, GOST12172-74 and secure with threads Ref No 14

6 Wind the windings counter clock wise as viewed from the side of marking

7 Lay papers, Ref,No,11. between the layer of winding I with overlap of onefourth of a turn

8 Protection of coil with respect to frame not exceeding 1mm, except the places for the transformer iron(from the side of terminals1-2 and3-4)

9 Insulate the ends of winding I with gasket, RefNo 4

10 Wire ПЭТВ-2 0 224. ПЭТВ-2. 1.18 OST160 505 001 80 is allowed instead of wires Ref,Nos,8,9 respectively

Diagram	No of windings	No of terminals	No of turns	Grade and diagram of wire	Resistance of windings ohms at20°c
1 (I) 2, H K	I	1-2	30-1	ПЭЛ-1 18	
3 (II) 4, H K	II	3-4	2000+50	ПЭВ-2-01	230^{+10}_{-20}

73/I615

SNo	SHT	DOC NO	SIGN	DATE
DRAWN		S Gopal		24/12
EDT,CHKD		D K JAIN		29.12.84
F/M,DC.		S.R NAIR		18.1.85
DIV.OFFR		A.K.KUNDU		14.2.85
		NAME	SIGN	DATE

P1QT.028 C5

TRANSFORMER COIL (Assy Drawing)

SHEET	WEIGHT	SCALE
5	0,1	2:1

TOTAL SHEETS

ORDNANCE FACTORY PROJECT HYDERABAD

73 I-615

12 1 AN/1620°/81

P10T.125

P10T.340

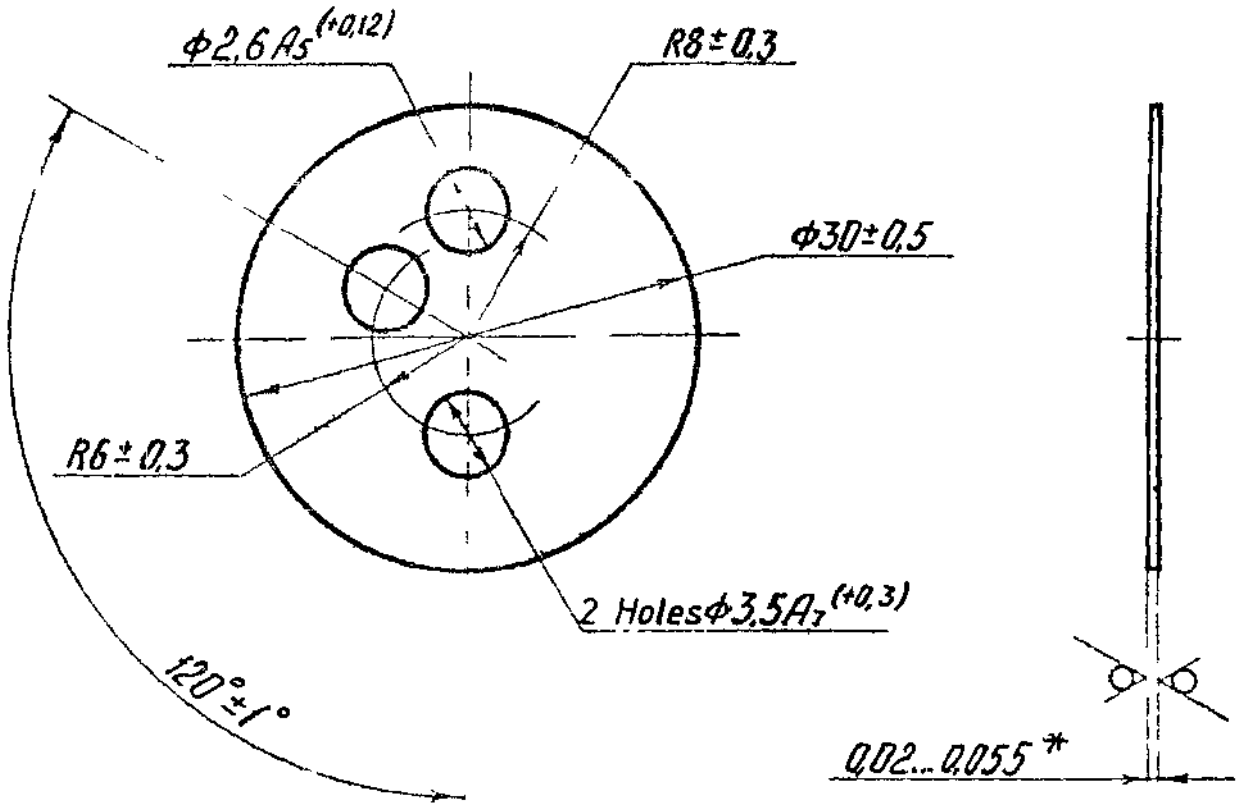

1. Alternate material is mica CΦ GOST 7134-64.

2. * Dimension is given for reference, other dimensions are provided with tools which are periodically checked not less than once quarterly.

3. Stamp K on seal of packing

107
I-615

ЕСКД

885

P10T.125

SNO	SHT	DOC NO	SIGN	DATE
DRAWN		R.H.PRASAD.		22.12.84.
EDT CHKD		D K JAIN		29 12 84
F/M, D.C.		S.R.NAIR.		18/1/85
DIV.OFFR		A.K.KUNDU		15.2.85
		NAME	SIGN	DATE

GASKET

Mica CO ГОСТ 7134-64.

SHEET	WEIGHT	SCALE
B	0.093gms.	2:1

TOTAL SHEETS

ORDNANCE FACTORY PROJECT HYDERABAD

Восстановленный - подлинник №3

P10T.129 1-2

▽6 Moulding

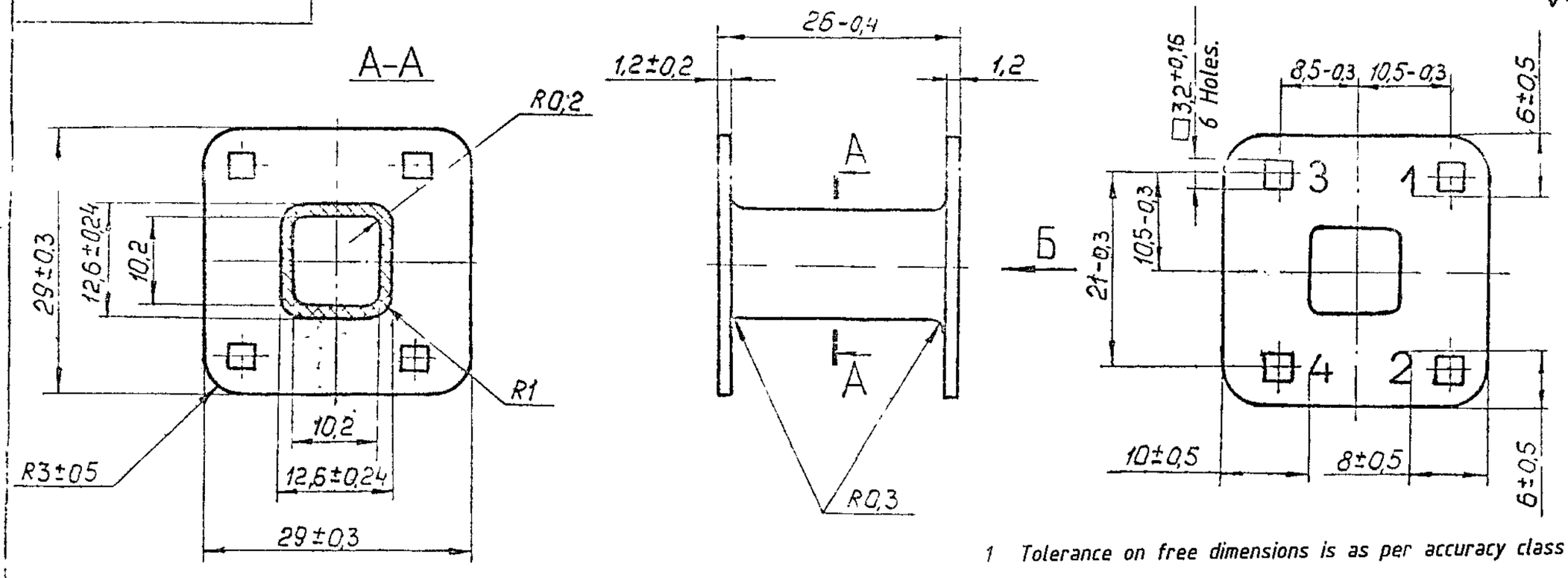

1 Tolerance on free dimensions is as per accuracy class 7.

3. Provide digits with type 4 as per H0.010.007, digit height is 0.5mm.

4. Digits 5 and 6 may be applied with enamel MC-17, grey TY 6-10-1012-78 with type 4 or 5 as per H0.010.007.

6. Drafts 1° towards increased dimension, those on dimension 10.2 are within the limits of tolerance.

7. Other requirements are as per OST B 84-1602-78.

View Б.

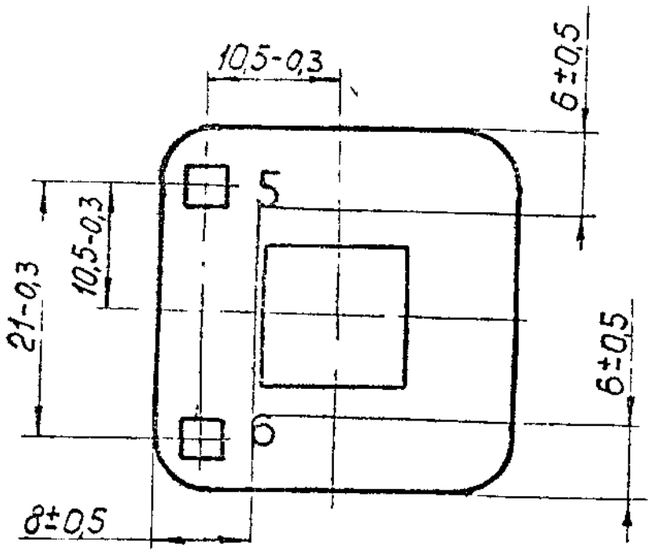

108/I-615

DESIGNATION.	K - BO	REMARKS.
P 10 T.129.1	4 holes □3.2+0.16	Without view Б
P 10 T.129.2	6 holes □3.2+0.16	With view Б.

108/I-615

P10T.129 1-2

SNO	SHT	DOC NO	SIGN	DATE
DRAWN		R.H.PRASAD.		22.12.84.
EDT&CHKD		D K JAIN		19.12.84
F/M,DC.		S.R.NAIR.		18.1.85
DIV.OFFR		A.K.KUNDU		15.2.85
		NAME	SIGN	DATE

FRAME

Polymide 610,casting, highest grade ГОСТ 10589-63.

SHEET	WEIGHT	SCALE
Б	3,3г	2,1

TOTAL SHEETS

ORDNANCE FACTORY PROJECT HYDERABAD

1. Alternate material is sheet $\frac{\text{Б 0.8 GOST 19904-74.}}{\text{II-ВГ-08 Kn GOST 9045-70.}}$
2. Bending radii R 0.5± 0.25mm.
3. Dimension Б should be provided with dimension A.
4. * Dimension is given for reference.

Rz 320 √(√)

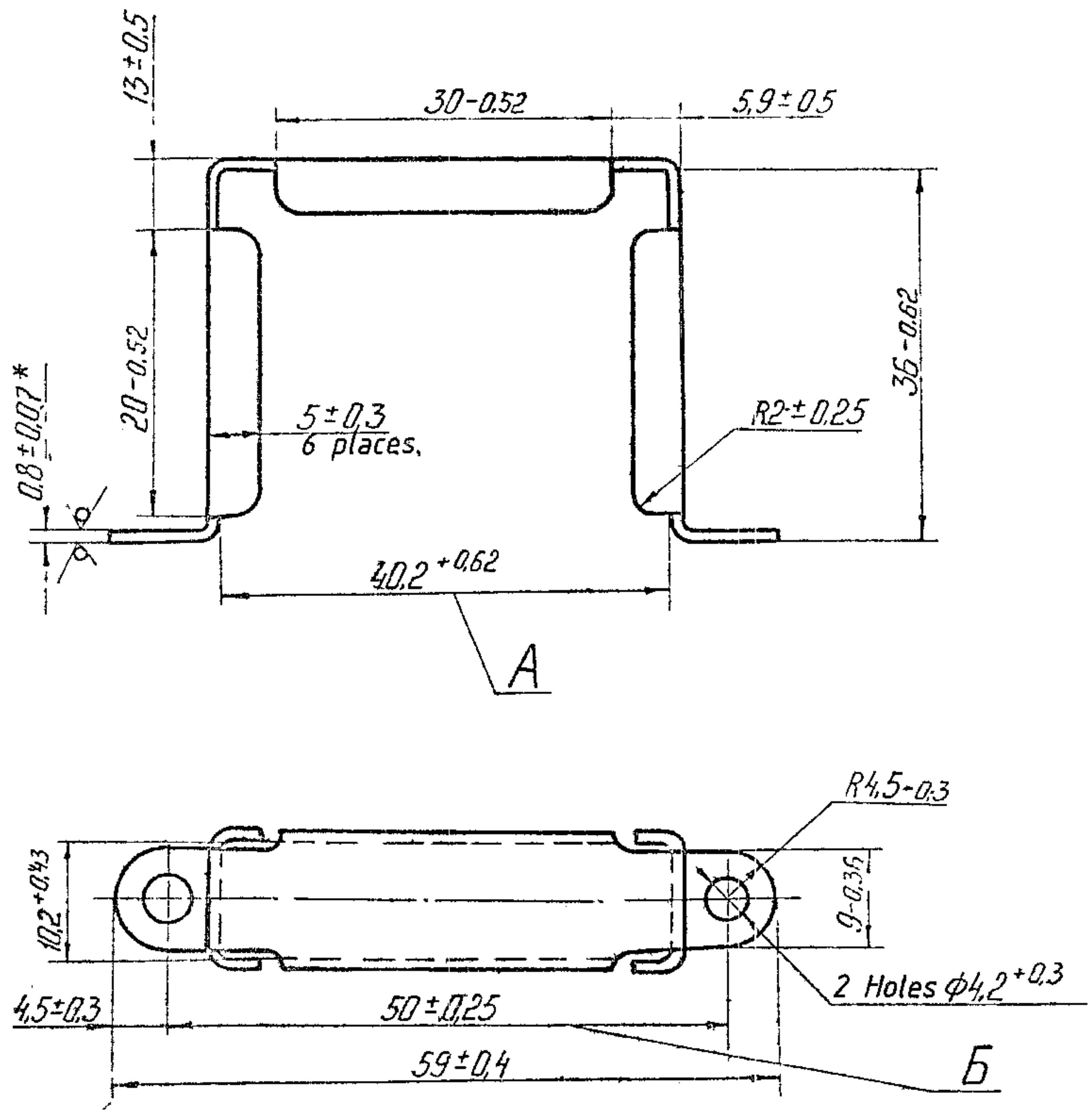

④

DESIGNATION.	COATING
P10T.140	Zinc-plated ,21 microns thick , chromatized. Composition of solution for chromatizing is as per И-252-78.

P10T.140

SNO	SHT	DOC NO	SIGN	DATE
DRAWN		R.H.PRASAD.	[signature]	24.12.84
EDT.CHKD		D.K.JAIN	[signature]	29.12.84
F/M,DC		S.R.NAIR.	[signature]	18.1.85
DIV.OFFR		A.K.KUNDU	AK.	15.2.85
		NAME	SIGN	DATE

CLAMP	SHEET	WEIGHT	SCALE.
	B	12.5gms.	2:1
	TOTAL SHEETS		
Sheet $\frac{\text{Б 0.8 ГОСТ 19904-74.}}{\text{4-II-08 Kn ГОСТ 16523-70.}}$	ORDNANCE FACTORY PROJECT HYDERABAD		

FORMAT	ZONE	REF. NO.	DESIGNATION.	DESCRIPTION.	QTY	REMARKS
				Technical papers		
12			P10TM-4C2 140СБ	Assembly drawing		
				Parts		
11		1	KT6 023	Lug	8	
				Material		
		2		Phenolic plastic 2-330-02 brown, GOST 5689-79		

74/I615

74
I-615

P10TM-4C2 140

S NO	SHT	DOC NO.	SIGN.	DATE
DRAWN BY		S Gopal	S Gopal	22/12
CHECKED		D K JAIN		29 12 8
F/M DC.		S R.NAIR.		18 1 85
DIV.OFFR.		A.K.KUNDU	A.K.	16.2.85
		NAME.	SIGN.	DATE

BOARD

SHT.NO.	TO NO.OF.SHT
	1

√6

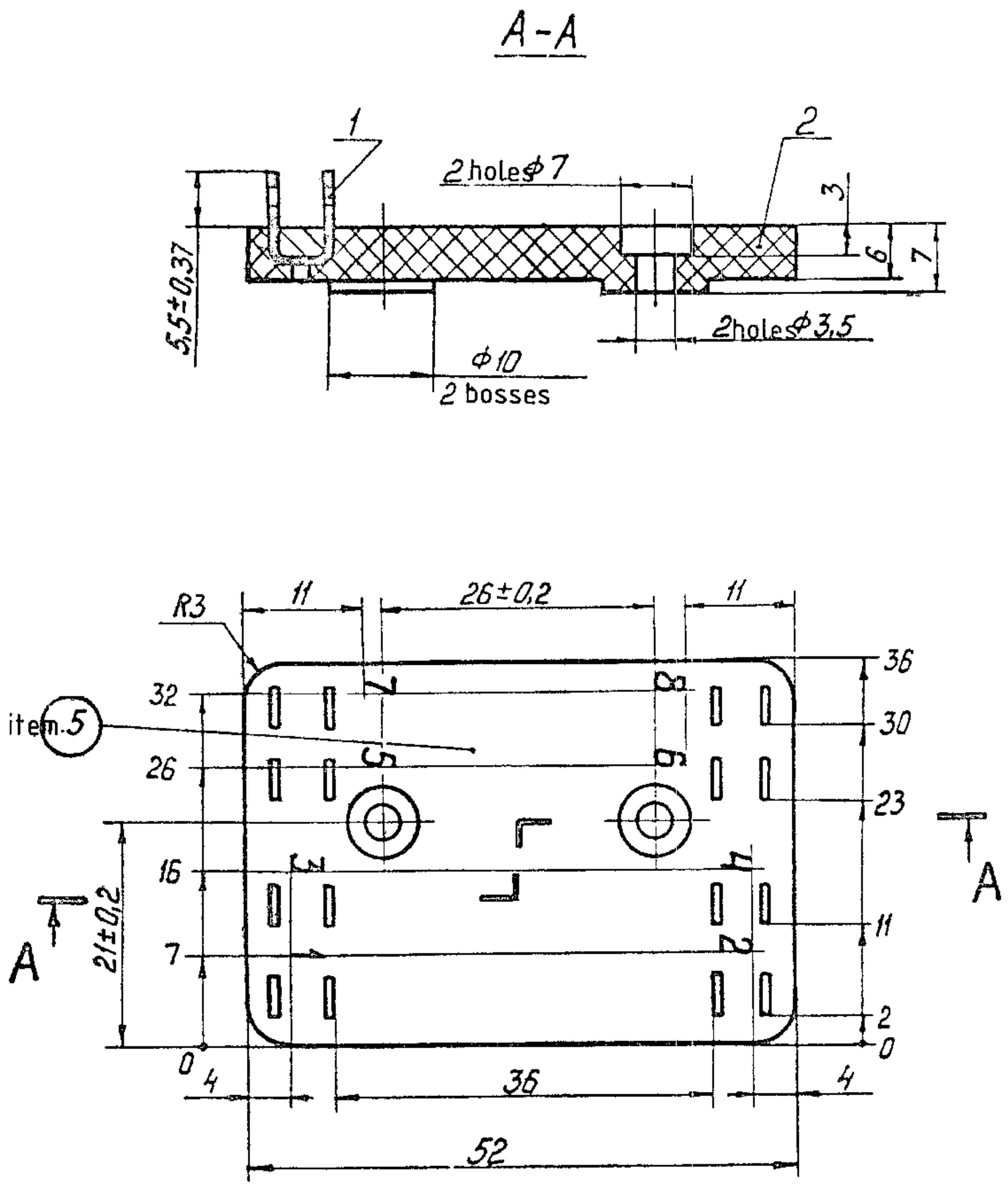

1 Unspecified limit deviations are as fallows
for holes-as per A7-for shafts-as per B7, others ±1/2 of class 7
2 Drafts upto 3° to the side of increased dimensions,
for holes upto 1°
3 Auxilary holes ϕ2mm are allowed against lugs, Ref, No1
4 Incribe the digits with type3 as per HO 010 007
5 Mark the serial number of seat with type2 as per HO 010 007
6 Other requirements are as per OST B 84-1602-78

75 / I-615

ЕСКД

P10TM-4C2.140C6

SNO/SHT	DOC NO	SIGN	DATE
DRAWN	SS Gopal	S.Gopal	22/12
EDT,CHKD	D K JAIN	[signature]	29.12.8
F/M, DC	S.R Nair	[signature]	18.1.8
DIV.OFFR	A.K.KUNDU	AK.	16.2.85
	NAME	SIGN	DATE

BOARD
(ASSEMBLY DRAWING)

SHEET	WEIGHT	SCALE
	0,018	2:1
	TOTAL SHEETS	

ORDNANCE FACTORY PROJECT HYDERABAD

Справ №
Перв примен
(Пт Эп) 29571
12523

РФ1 270

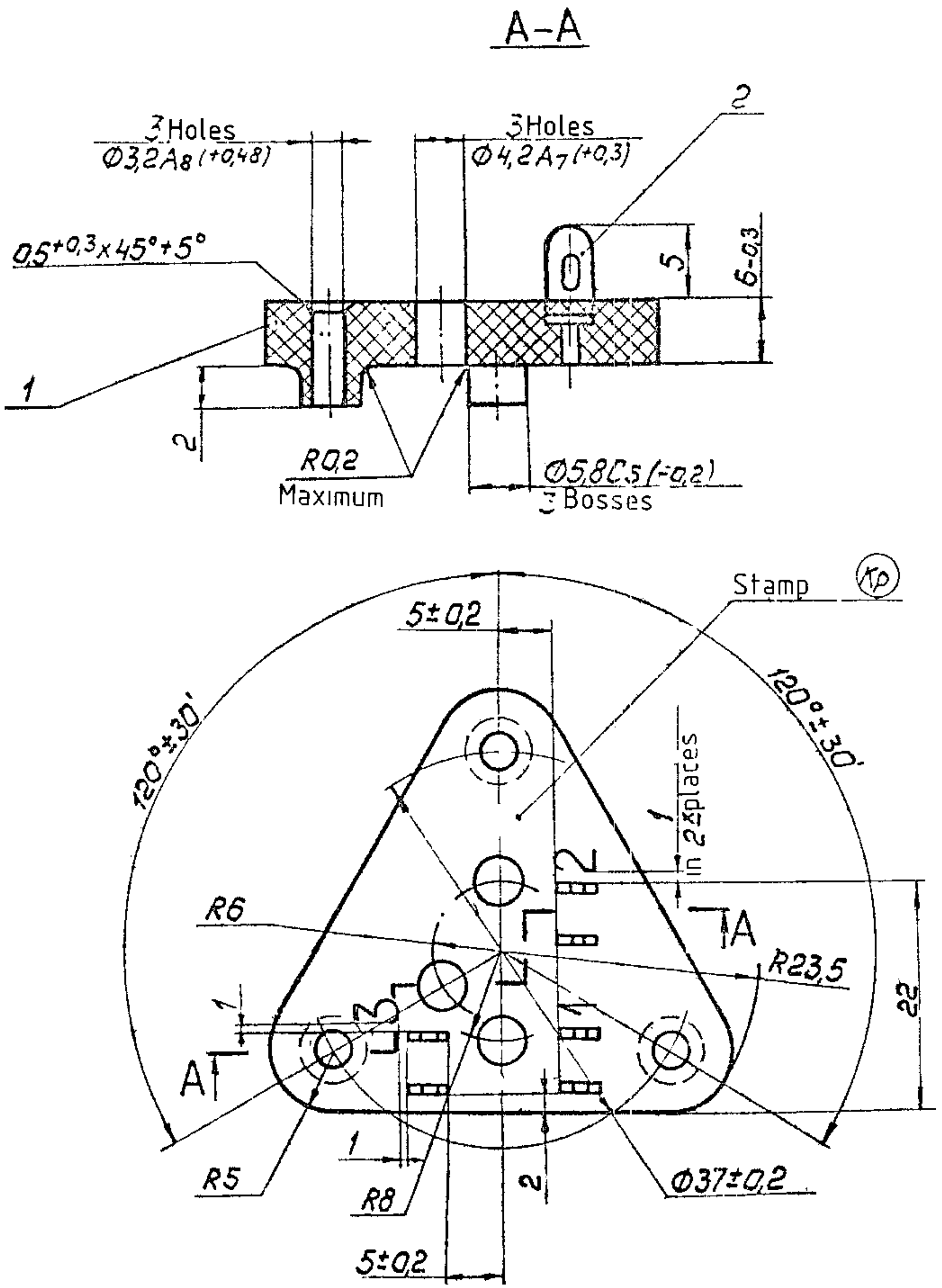

1 Tolerence for free dimensions are±0,3mm,
2 Drafts upto2° towords increase of body, and in holes are with in the limits of tolerence
3 Unspecified external and internal radii are R0 3mm
4 Hight of digits is 0,1 to 0,2 type 4 as per H0 010 007
6 Heat treat the board if manufactured from moulding meterial АГ-48 GOST20437-75
7 Stamp
8 Alternate material is moulding meterial АГ-48 GOST20437-75.
9 Technolozical holes ϕ2mm are allowed opposite to the lugs.
10. Tear out on the part is allowed on the side of bosses as a result of removel of gate with a depth up to 2mm and diameter up to 6mm
11 Other requirements are as per OST B 84-1602-78

Ref	Designation	Description	Qnty	Remarks
2	KT6 023	LUG	3	
1		Moulding meterial ДСВ-4-Р-2 M, grade 0 GOST17478-72	13g	

| 10 | 2 | ЛИЦЛ1903-80 | 9781 |

РФ1 270

SNO	SHT	DOC NO	SIGN	DATE
DRAWN		S Gopal	[signature]	22/12
EDT, CHKD		D.K.JAIN	[signature]	28.12.81
F/M, DC.		S.R.Nair	[signature]	18/8
DIV.OFFR		A.K.KUNDU	[signature]	16.12.85
		NAME	SIGN	DATE

BOARD

SHEET	WEIGHT	SCALE.
	14,5	2:1

TOTAL SHEETS

ORDNANCE FACTORY PROJECT HYDERABAD

59
I-615

11175 (подл) 4.12.68.

восстановленный подлинник

FORMAT	ZONE	REF. NO.	DESIGNATION	DESCRIPTION.	QTY	REMARKS
				Technical papers		
12			PΦ1.290C6	Assembly drawing.		
				Parts		
11		1	KT6 023	Lug	4	
			Variable data for versions			
		2		PΦ1-290		
				Material		
				Phenoplastic Э2-330-02 GOST5689-79	10	g

60
I-615

PΦ1 290

S NO	SHT	DOC NO.	SIGN.	DATE
DRAWN BY		S Gopal	S. Gopal	22/12
CHECKED		D.K. JAIN		28.12.8
F/M DC.		S R NAIR.		18.1.85
DIV OFFR		A.K. KUNDU	AK.	16.2.85
		NAME.	SIGN.	DATE

BOARD

SHT.NO.	TO NO.OF.SH
	1

2,0

A-A

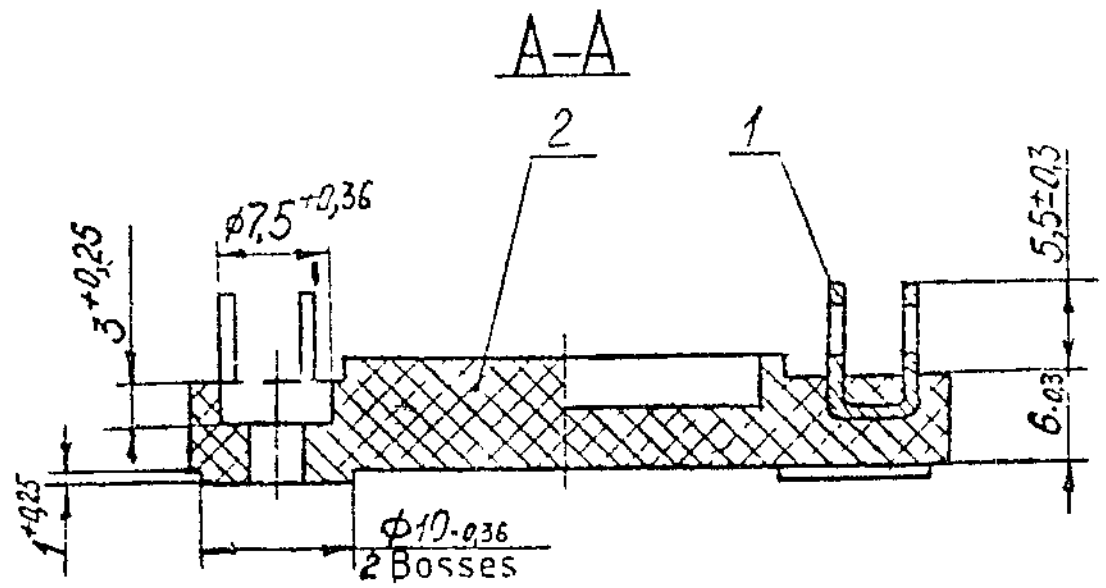

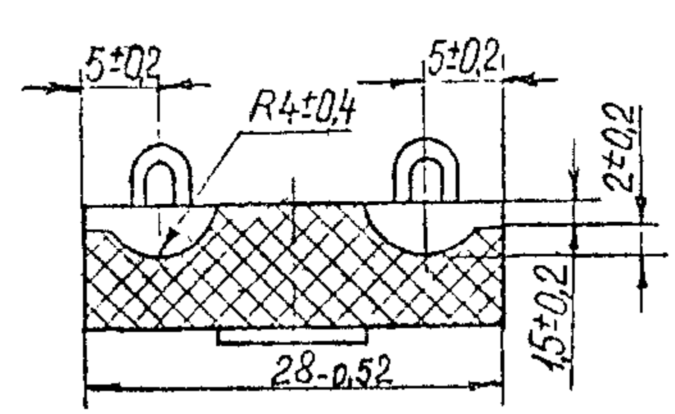

Designation	Alternate material
РФ1,290	PhenoplasticCn1-342-02 GOST5689-.

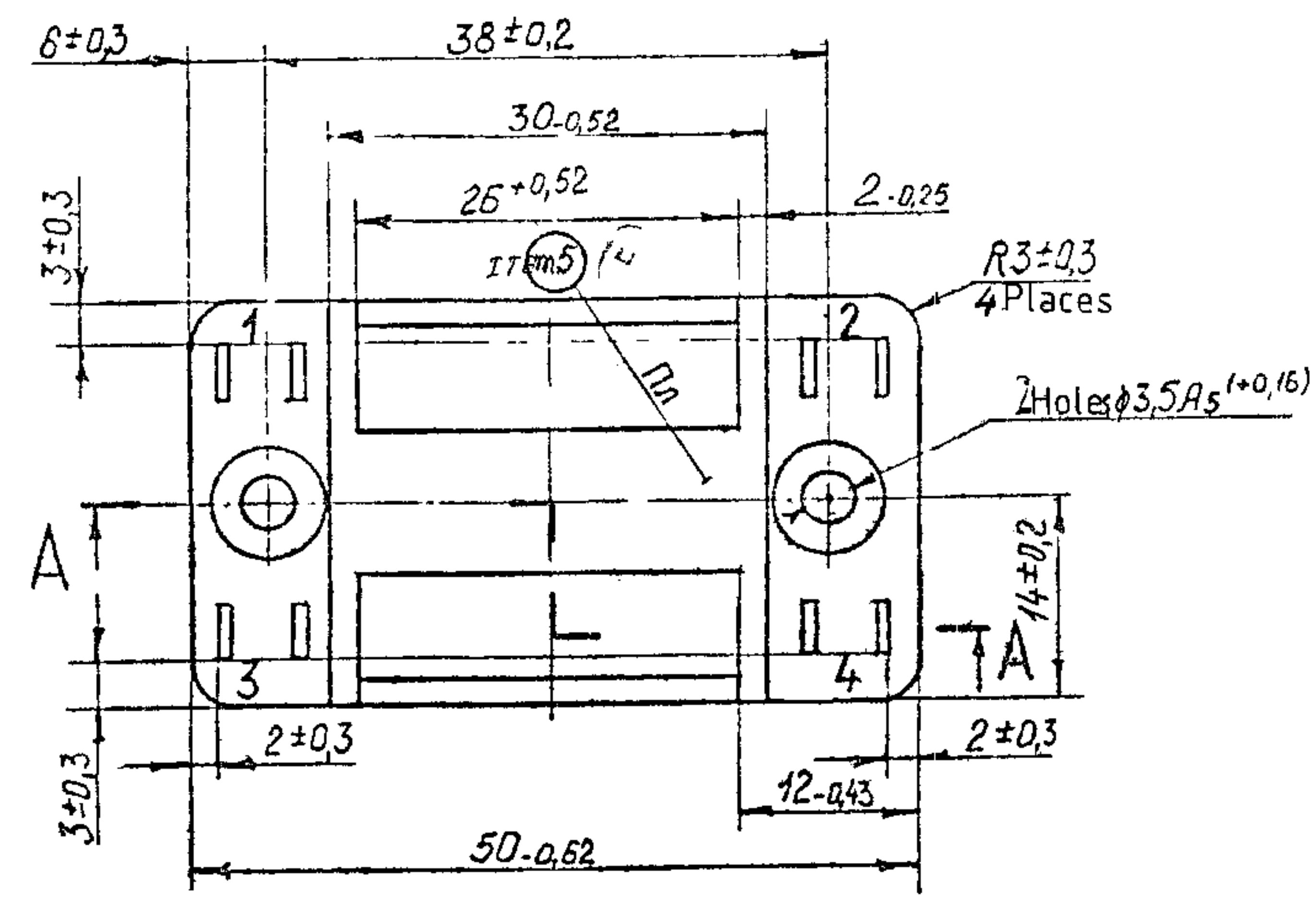

2 Drafts of upto 1° towords increasing dimensions are allowed
3 Auxilary holes 2mm are allowed againest the lugs
4 Incribe the digits with projecting type2 5 as perHO 010 007
5 Mark the seat numbers with type 3 as per HO 010 007
6 Other requirements areas per OST B 84-1602-78

61
I-615

РФ1.290СБ

SNO	SHT	DOC NO	SIGN	DATE
DRAWN		S.Gopal		22/12
EDT,CHKD		D K JAIN		
F/M,D.C.		S.R.Nair		18.1.86
DIV.OFFR		A.K.KUNDU		16.2.86

BOARD

ASSEMBLY DRAWING

SHEET	WEIGHT	SCALE
6	0,012	2:1

TOTAL SHEETS

ORDNANCE FACTORY PROJECT HYDERABAD

FORMAT	ZONE	REF., NO.	DESIGNATION	DESCRIPTION.	QTY	REMARK
				Technical papers		
12			PΦ1430СБ	Assembly drawing,		
				Other items.		
11		1		Lug НБК7.750 067		
				НБКО 775 017	3	X9-111-37
				Materials		
		2		Phenolic plastic		
				Cn1-342-02,brown		
				GOST5689-73	30g	

62
I-615

PΦ1430

S NO	SHT	DOC NO.	SIGN.	DATE
DRAWN BY		S Gopal	S. Gopal	22/12
CHECKED		J.K. JAIN		28.12.85
F/M DC.		S.R.NAIR.		18.1.85
DIV OFFR		A.K.KUNDU		16.2.85
		NAME.	SIGN.	DATE

BOARD

SHT.NO.	TO NO.OF.SHT
	1

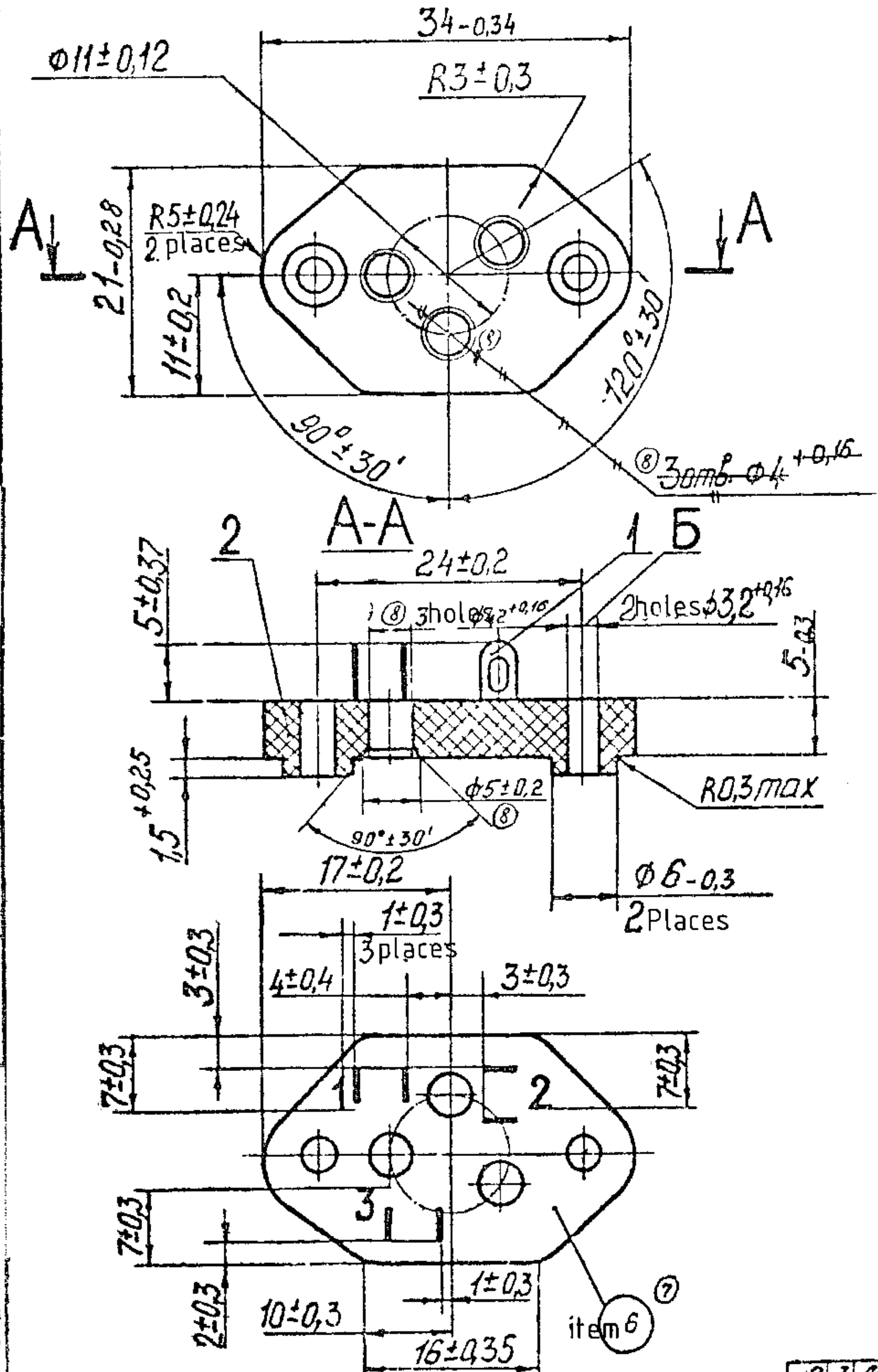

1 Drafts upto3° towords decreased dimensions are allowed crafts on the holes b should be within the limit of tolerance

2 Auxilary holes 2mm are allowed again-st lugs

3 Provided digits with projecting type 3 as per HO-010 007 0 1 to 0,2mm

4 Stamp Ky on the seal in bundle,

5 Other requirementsare as perOST B84-1602-78

6 Mark the seat number of mould with type 2 as per HO 010 007

2,0

63 I-615

ЕСКД

РФ1.430СБ

SNO	SHT	DOC NO	SIGN	DATE
DRAWN		S Gopal		22/12
EDT, CHKD		D K SAIN		26 12 84
F/M, D.C.		S R Nmr		18 1 85
DIV. OFFR		A.K. KUNDU		16 2 85
		NAME	SIGN	DATE

BOARD
ASSEMBLY DRAWING

SHEET	WEIGHT	SCALE
	0,0036	2:1
	TOTAL SHEETS	

ORDNANCE FACTORY PROJECT HYDERABAD

0 3 АЦЦЛ2631-80

РФ1.430СБ

Перв. примен. БА 20М | Справ N | Подпись и дат | Инв N дубл. | Взам инв N | Подпись и дата | Инв N подл 91320

FORMAT	ZONE	REF. NO.	DESIGNATION.	DESCRIPTION.	QTY	REMARKS
24			PH10 000СБ	Asembly drawing		
*)			PH10 000МЭ	Electric wiring drawing		*)11,24
24			PH10 000Г4	Outline drawing		
23			PH10 000Э3	Schematic circuit diagram		
12			PH10 000ВС	List of specifications		
11			PH10 000Ту1	Technical specifications		*Drawn up in separate album
11			PH10 000ТО	Technical description & operating instructions		* Drawn up in separate album
*)			PH10 000пс	Certificate		*Drawn up in separate album *)11,32
*)			PH10 0003И	List of spare parts (SPTA)		Drawn up in separate album *) 11,12

8
I-615

S NO	SHT	DOC NO.	SIGN.	DATE
DRAWN BY		N Yesudas		20 12 84
CHECKED		B Sarkar		24.12.84
F/M DC.		S.R NAIR.		18 1 85
DIV OFFR.		A.K.KUNDU		15.2.85
		NAME.	SIGN.	DATE

PH10 000

VOLTAGE REGULATOR

PH-10

SHT.NO.	TO.NO.OF.SHT
1	8

ORDNANCE FACTORY
PROJECT HYDERABAD

FORMAT	ZONE	REF. NO.	DESIGNATION	DESCRIPTION.	QTY	REMARKS
				Assembly units		
11		1	PH10 020	Measuring unit БИ-10	1	
11		2	PH10 040	Board	1	
11		3	PH10 070	Unit	1	
11		4	PH10 190	Chassis	1	
11		5	PH10 220	Board	1	
11		6	PH10 230	Cover	1	
11		7	PH10 240	Board	1	
11		10	P10T 027	Transformer	1	
				Parts	1	
11		14	PH10 001	Gasket	1	
13		16	PH10 016	Cover	1	
22		17	PH10 017	Cover	1	
12		19	PH10 022	Gasket	1	
12		21	PH10 027	Casing	1	9 I-615

S NO. SHT	DOC NO.	SIGN.	DATE
DRAWN BY	N Yesudas		20 12 84
CHECKED	B Sankar		24 12
F/M DC.	S R NAIR.		18 1 85
DIV.OFFR.	A.K.KUNDU		
	NAME.	SIGN.	DATE

PH10.000

VOLTAGE REGULATOR
PH-10

SHT.NO.	TO.NO.OF.SHT
2	8

ORDNANCE FACTORY
PROJECT HYDERABAD

FORMAT	ZONE	REF. NO.	DESIGNATION	DESCRIPTION.	QTY	REMARKS
11		25	PH10.031	Angle piece	1	
22		27	PH10.034	Cover	1	
13		28	PH10.035	Gasket	1	
12		29	PH10.036	Instruction plate	1	
11		33	AK8.735.008	Shock absorber	4	
11		35	БК8.683.000	Gasket	1	
11		36	БК8.942.247	Washer	4	
11		38	BKy.024	Hollow rivet	4	
11		39	BKy.072	Gasket	1	
11		41	M11-40293	Washer	5	
11		43	PБT.135	Special bolt	3	
11		45	8X-189	Washer	2	
11		46	X3-9675	Washer	1	
12		48	X9-10948	Transporting cap	1	

10
I-615

10/I-615

PH10.000

S NO	SHT	DOC NO.	SIGN.	DATE
DRAWN BY		N Yesudas		20.12.84
CHECKED				26.12
F/M DC.		S.R NAIR.		18/85
DIV.OFFR.		A.K.KUNDU		15.2.85
		NAME.	SIGN.	DATE

VOLTAGE REGULATOR
PH-10

SHT.NO.	TO NO.OF.SHT
3	8

ORDNANCE FACTORY
PROJECT HYDERABAD

FORMAT	ZONE	REF. NO.	DESIGNATION.	DESCRIPTION.	QTY	REMARKS
				STANDARD ARTICLES		
				Screw GOST1491-72		
		55		M3-6gx836.016	4	x1-10542
		56		M3-6gx10.36.016	7	X1-10539
		57		M3-6gx25.36.016	5	X1-11299
		59		M4-6gx8.36.016	4	X1-10527
		61		Screw M4-6gx8.36.016 GOST17473-72	6	8X-1541
		63		Screws GOST17475-72 M3-6gx6.36 016	2	X1-10561
		65		M4-6gx8.36.016	4	7X-4081
		66		M4-6gx10.36.016	25	X1-10557
		68		M5-6gx10.36.016	1	M11-41872
				Washers GOST6402-70		
		70		3.65r06	9	X-10581
		71		4.65r06	6	X-1012

11
I-615

PH10.000

S NO	SHT	DOC NO.	SIGN.	DATE
DRAWN BY		N Yesudas		20 12 84
CHECKED		D Sarkar		24 12
F/M DC.		S R NAIR.		18 / 85
DIV OFFR		A. K. KUNDU		15.2.85
		NAME.	SIGN.	DATE

VOLTAGE REGULATOR
PH-10

SHT.NO.	TO.NO.OF.SHT
4	8

ORDNANCE FACTORY
PROJECT, HYDERABAD

FORMAT	ZONE	REF. NO.	DESIGNATION	DESCRIPTION.	QTY	REMARKS
				OTHER ARTICLES		
		75		Plug ШРГ 28П7ЭШ9		
				ГЕ0.364.108Ty(technical specifications)	1	
		76		Plug 2РМГД27Б19Ш5Е2Б		
				ГЕ0.364.140Ty(technical specifications)	1	
		77		Plug ГЕ6.433.045-05		
				ГЕ0.364.126ТО(technical description)	1	
		78		Capacitor ОСМБГО-2-160-$20\pm10\%$		
				ОЖ0.462.078Ty	1	
		79		Relay ТКЕ52ПД1		
				Technical specifications No.872-66	1	
		80		Socket РП10-11		
				ГЕ0-364.004Ty(technical specifications)	1	
						12 I-615

PH10 000

S NO	SHT	DOC NO.	SIGN	DATE			
DRAWN BY		N.Yesudas	[signature]	20 12 84	VOLTAGE REGULATOR PH-10	SHT.NO. 5	TO NO.OF.SH 8
CHECKED		B. [signature]	[signature]	26.12		ORDNANCE FACTORY PROJECT HYDERABAD	
F/M DC.		S R NAIR.	[signature]	18/85			
DIV OFFR		A.K.KUNDU	[signature]	15.2.85			
		NAME	SIGN.	DATE			

FORMAT	ZONE	REF NO.	DESIGNATION	DESCRIPTION	QTY	REMARKS
				SETS		
11			y3.320.000	Voltage regulator PH-10		Drawn up in separate
				SPTA. No.2	1	album
				Package		
11			y3.607.1000			
				(PH-10 SPTA No,2)		
				package	1/30	Drawn up in separate
						album
11			y 100.000	Voltage regulator PH-10		Drawn up
				Package	1/2	in separate album
11			y.260.000	PH-10		
				SPTA No.1		Drawn up
				Package	1	in separate album

13/I-615

13 I-615

PH10.000

S.NO	SHT	DOC NO.	SIGN	DATE
DRAWN BY		N.Yesudas	[signature]	20.12.84
CHECKED		[signature]	[signature]	[illegible]
F/M DC.		S.R NAIR.	[signature]	18.1.85
DIV.OFFR.		A.K.KUNDU	AKK	15.2.85
		NAME.	SIGN.	DATE

VOLTAGE REGULATOR
PH-10

SHT.NO.	TO NO.OF.SHT
6	8

ORDNANCE FACTORY
PROJECT HYDERABAD

FORMAT	ZONE	REF. NO.	DESIGNATION	DESCRIPTION.	QTY	REMARKS
				Specified as per		
				PH10.000M Э		
				Materials		
				Wire Ty16-505.437-73		
				(technical specifications)		
		85		МГWB 0.35	22.63m	
		86		МГ WB 0.5	2.83m	
		87		МГWB 0.75	2m	
		88		МГ WB 1.5	2.05m	
				White sleeve		
				GOST 19034-73		
		90		ШТВ-40-230-2.5	0.04m	
		91		ШТВ-40-230-3x0.4	1.21m	
		92		ШТВ-40-230-3.5	0.45m	
		93		ШТВ-40-230-4x0.6	0.17m	
		94		ШТВ-40-230-5	0.07m	
		95		ШТВ-40-230-8	0.02m	
		96		Light blue PVC tape		
				nBX15x0.2		
				Grade 1		
				GOST 16214-70	0.2m	
		97		Thread in twelveply		
				"extra strong" Noo, glossy		any colour
				Grade 1, GOST 6309-73	25m	14 I-615

14/I.615

S NO	SHT	DOC NO.	SIGN	DATE
DRAWN BY		N.Yesudas		20 12 84
CHECKED				24 12
F/M DC.		S.R.NAIR.		18 1 85
DIV.OFFR				
		NAME.	SIGN.	DATE

PH10.000

VOLTAGE REGULATOR

PH 10

SHT.NO.	TO NO.OF.SHT
7	8

ORDNANCE FACTORY
PROJECT HYDERABAD

15/I-615

15
I-615

PH1C 00C

8

VOLTAGE REGULATOR

PH-10

PH10.000

7

I-61ɔ

ALBUM No:72

TECHNICAL PAPERS

FOR ARTICLE"84/0848711-03- b-40007"

MAIN PRODUCTION DRAWINGS

(FOR VOLTAGE REGULATOR)

I-615

LIST
CONTENTS OF ALBUM No.72
INDEX No "84/0848711-03-ГБ-40007"

Ref No	Assembly, Article drawings numbers	Description of technical paper	Drawing number (prosses sheet)	number of sheets	Number of subcequent changes	Remarks
1	2	3	4	5	6	7
1	Drawing albums	Title sheet	PH10 000	1		
2	Voltage regulator PH-10 PH10 000	Specifications	PH10.000 Sheet 1 Sheet 2 Sheet 3 Sheet 4 Sheet 5 Sheet 6 Sheet 7 Sheet 8	8		
3		Assembly drawing	PH10-000СБ	1		
4		Electric wiring diagram	PH10 000МЭ Sheet 1 Sheet 2 Sheet 3 Sheet 4 Sheet 5	5		
5		Outline drawing	PH10.000ГЧ	1		
6		Schematic circuit diagram	PH10 000Э3	1		
7		List of specifications	PH10.000ВС Sheet 1 Sheet 2	2		

1
I-615

1	2	3	4	5	6	7
8		Specification	PH10 010	1		
9		Assembly drawing	PH10 010СБ	1		
10		Specifications	PH10 020 Sheet 1 Sheet 2 Sheet 3 Sheet 4	4		
11		Assembly drawing	PH10 020СБ	1		
12		Specifications	PH10 040 Sheet 1 Sheet 2	2		
13		Assembly drawing	PH10 040СБ	1		
14		Specifications	PH10 060 Sheet 1	1		
15		Assembly drawing	PH10 060СБ	1		
16		Drawing	PH10 070	1		
17		Specifications	PH10 170	1		
18		Assembly drawing	PH10 170СБ	1		
19		Specifications	PH10 190 Sheet 1 Sheet 2	2		
20		Assembly drawing	PH10 190СБ	1		
21		Specifications	PH10 210	1		
22		Assembly drawing	PH10 210СБ	1		
23		Specifications	PH10 220	1		
24		Assembly drawing	PH10 220СБ	1		
25		Drawing	PH10 230	1		
26		Specifications	PH10 240	1		

1	2	3	4	5	6	7
44		Specifications	P10TM-4C2-140	1		
45		Assembly drawing	P10TM-4C2 140СБ	1		
46		Drawing	PH10 001 Sheet 1 Sheet 2	2		
47		Drawing	PH10 002	1		
48		Drawing	PH10 004	1		
49		Drawing	KT6 007	1		
50		Drawing	KT6 008	1		
51,		Drawing	PH10 011	1		
52,		Drawing	БР15 012	1		
53		Drawing	PH10.014	1		
54		Drawing	PH10 015	1		
55		Drawing	PH10 016	1		
56		Drawing	Бу40М-016	1		
57		Drawing	PH10 017	1		
58		Drawing	PH10 019	1		
59		Drawing	PH10 022	1		
60		Drawing	PH10 023	1		
61		Drawing	KT6 023	1		
62		Drawing	BKy 024	1		
63		Drawing	PH10.025	1		
64		Drawing	PH10 026	1		
65		Drawing	PH10 027	1		
66		Drawing	PH10 029	1		
67		Drawing	PH10 031	1		
68		Drawing	PH10 033	1		
69		Drawing	PH10 034	1		
70		Drawing	PH10 035	1		
71		Drawing	PH10 036	1		
72		Drawing	PH10 037	1		
73		Drawing	BKy 072	1		
74		Drawing	P10T 118	1		
75		Drawing	P10T 120	1		
76		Drawing	P10T 125	1		
77		Drawing	P10T 1291-2	1		

1	2	3	4	5	6	7
78		Drawing	P10.T.130	1		
79		Drawing	P10T.131	1		
80		Drawing	P10T.132	1		
81		Drawing	P6T.135	1		
82		Drawing	P10T.140	1		
83		Drawing	P10T.143	1		
84		Drawing	P6T.156	1		
85		Drawing	P10T.157	1		
86		Drawing	P10T.158	1		
87		Drawing	P10T.160	1		
88		Drawing	8X-189	1		
89		Drawing	P10TM.226	1		
90		Drawing	X-1012	1		
91		Drawing	X-1482	1		
92		Drawing	8X-1497	1		
93		Drawing	8X-1541	1		
94		Drawing	8X-1548	1		
95		Drawing	X3-4033	1		
96		Drawing	7X-4081	1		
97		Drawing	X3-9675	1		
98		Drawing	X1-10527	1		
99		Drawing	X1-10539	1		
100		Drawing	X1-10542	1		
101		Drawing	X1-10557	1		
102		Drawing	X1-10560	1		
103		Drawing	X1-10561	1		
104		Drawing	X-10581	1		
105		Drawing	X2-10598	1		
106		Drawing	X1-10763	1		
107		Drawing	X6-10783	1		
108		Drawing	X1-10871	1		
109		Drawing	X9-10948	1		
110		Drawing	X3-11005	1		
111		Drawing	X9-111-37	1		
112		Drawing	X6-11236	1		
113		Drawing	X1-11299	1		
114		Drawing	X5-114-53	1		

1	2	3	4	5	6	7
115		Drawing	X1-11641	1		
116		Drawing	X1-11653	1		
117		Drawing	M11-40293	1		
118		Drawing	M11-41872	1		
119		Drawing	БК8.109.890	1		
120		Drawing	БК8.683.000	1		
121		Drawing	АК8.735 008	1		
122		Drawing	КС7.750 006-3	1		
123		Drawing	ВЗ 8.942.008	1		
124		Drawing	БК8.842 $\frac{244}{247}$	1		
125		Drawing	БК8.942.258	1		
126		Drawing	ВЗ8.943-000	1		
		Total	Sheets	151		
	NOTE	PH10 060 sheet 2 mandrel is not appplicable				

1	2	3	4	5	6	7
27		Asembly drawing	PH10 240СБ	1		
28		Specifications	PH10 250 Sheet 1 Sheet 2 Sheet 3 Sheet 4	4		
29		Assembly drawing	PH10 250СБ	1		
30		Schematic circuit diagram	PH10.250 3	1		
31		Specifications	KT6 090	1		
32		Assembly drawing	KT6 090СБ	1		
33		Drawing	PФ 1270	1		
34		Specifications	PФ1290	1		
35		Assembly drawing	P 1290СБ	1		
36		Specifications	PФ1430	1		
37		Assembly drawing	PФ 1.340СБ	1		
38		Specifications	P10T 019	1		
37		Assembly drawing	PФ 1.430СБ	1		
38		Specifications	P10T.019	1		
39		Assembly drawing	P10T.019СБ	1		
40		Specifications	P10T.027 Sheet 1 Sheet 2	2		
41		Assembly drawing	P10T 027СБ	1		
42		Specifications	P10T.028 Sheet 1 Sheet 2 Sheet 3 Sheet 4	4		
43		Assembly drawing	P10T.028СБ	1		

No of lines	Designation	Description	Incorporated in Designation	Qty	Total Qty	Remarks
1.	PH10 000	Voltage regulator PH-10			1	
2						
3	PH10 010	Transistor	PH10 020	1	1	
4	PH10 020	Measuring unit БИ -10	PH10 000	1	1	
5	PH10 040	Board	PH10 000	1	1	
6	PH10 060	Board	PH10 190	1	1	
7	PH10 070	Unit	PH10 000	1	1	
8	PH10 170	Angle piece	PH10 190	1	1	
9	PH10 190	Chassis	PH10 000	1	1	
10	PH10 210	Board	PH10 190	1	1	
11	PH10 220	Board	PH10 000	1	1	
12	PH10 230	Cover	PH10 000	1	1	
13	PH10 240	Board	PH10 000	1	1	
14	PH10 250	Board	PH10 190	1	1	
15						
16	KT6.090	Transistor	PH10 070	2	2	
17						
18	PФ1 270	Board	PH10 070	3	3	
19	PФ1 290	Board	PH10.210	1	1	
20			PH10.220	1	1	
21	PФ1 430	Board	PH10.020	1	1	
22			PH10.070	2	2	
23						
24						

24
I-6'5

24
I.615

PH10 000BC

	Name	Sign	Date
DRAWN	N Yesudas		20.12.8[illegible]
CHECKED	[illegible]		[illegible]
F/M DC	S R Nair		18.1.[illegible]
APPROVED	A.K. KUNDU		15.2.[illegible]

VOLTAGE REGULATOR
PH-10
LIST OF SPECIFICATIONS

SHEETS	SHT.No	Total No.
	1	2

ORDNANCE FACTORY
PROJECT HYDERABAD

No of lines	Designation	Description	Incorporated in Designation	Qty	Total Qty	Remarks
1	P10T 019	Frame	P10T.028	1	1	
2	P10T 027	Transformer	PH10 000	1	1	
3	P10T 028	Coil	P10T 027	1	1	
4	P10TM-4C2 140	Board	PH10 240	1	1	
5						
6						
7						
8	y3320 000	Voltage regulator PH-10 SPTA No 2				
9		Package	PH10 000	1	1	Special album
10	y3 607 000	(PH-10 SPTA No.2)				
11		Package	PH10 000	1/30	1/30	Special album
12	y 100,000	Voltage regulator PH-10				
13		Package	PH10 000	1/2	1/2	Special album
14	y 260 000	PH-10				
		SPTA No 1				
		Package	PH10 000	1	1	Special album

25
I-615

PH 10.000BC

	NAME	SIGN	DATE
DRAWN	N Yesudas		20 12 84
CHECKED			
F/M DC	S R Nair		18 1 85
APPROVED	A.K.KUNDU		15 2 85

VOLTAGE REGULATOR
PH-10
LIST OF SPECIFICATIONS

SHEETS	SHT No	Total No
	2	2

ORDNANCE FACTORY
PROJECT HYDERABAD

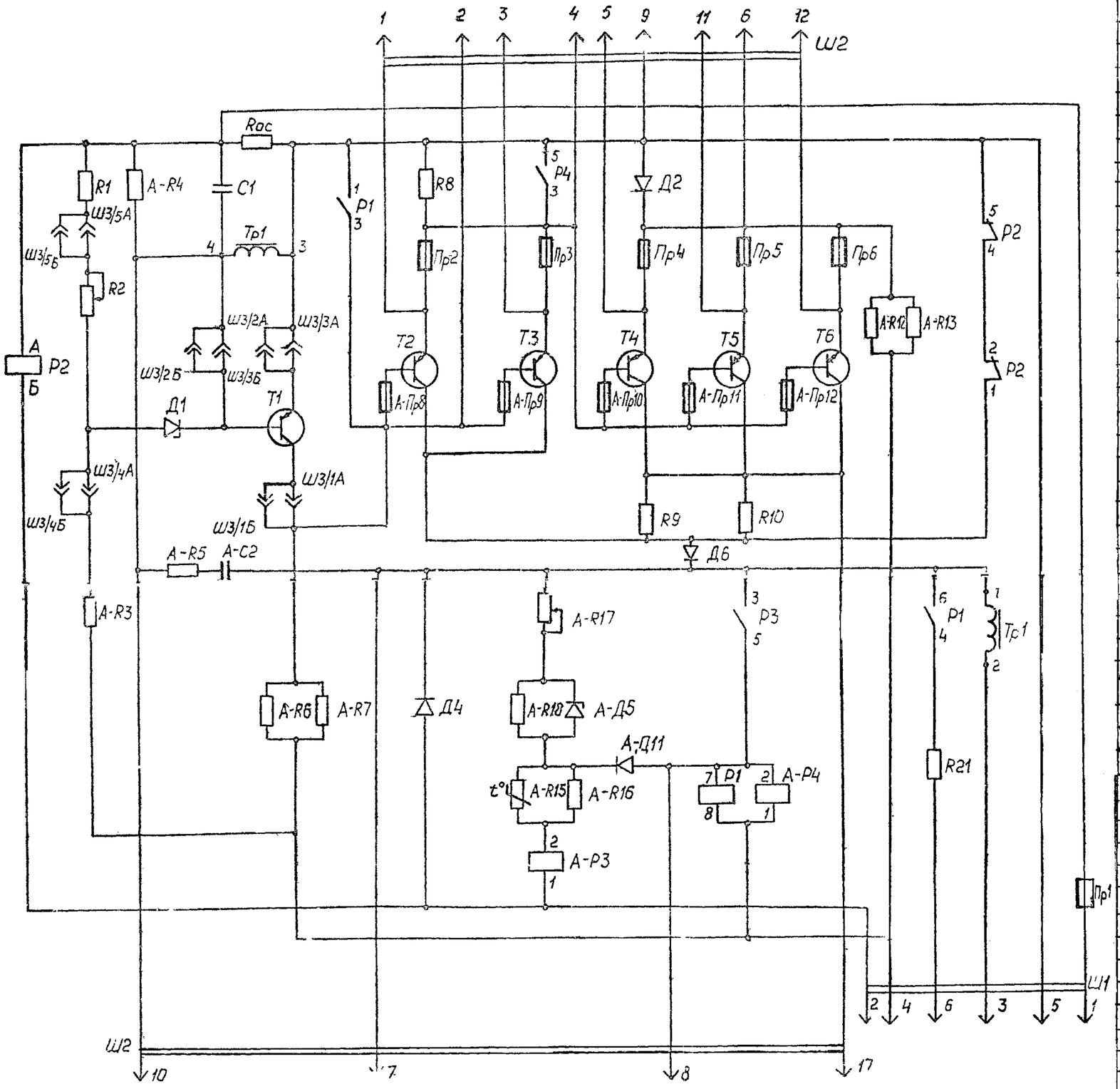

A-Board PH10 250

Ref Designation	Description	Qty	Remarks
R1	Resistor УЛИ-0 5-86 6 ohm ±2% ОЖ0467 013Ту	1	
R2	" СП 5-3-1ВТ100 Ohm±10% ОЖ0 468 506Ту	1	
R3	" С5-5-28ВТ240Ohm±1% ОЖ0 467 505Ту	1	
R4	" УЛИ-0 125-36 5 ohm±2% ОЖ 0 467 013Ту	1	
R5	" ОМЛТ-0 5-В-27К ohm±5% ОЖ0-467 107Ту	1	
R6,R7	" ОМ Т-2-В-510Ohm± 5% "	2	
R8	" УЛИ -0 125-20 5 Ohm±2 % ОЖ0 467 013Ту	1	
R9,R10	Resistor Р10Т 143	2	
R12,R13	Resistor ОМЛТ-2-В-510 Ohm± 5% ОЖ0 467-107Ту	2	
R15	Temperature sensitive Resistor ММТ-9-75 Ohm± 10% GOST 10688-75	1	
R16	Resistor УЛИ-0 125-68 1 Ohm± 2% ОЖ0-467-013Ту	1	
R17	Resistor СП5-2-1ВТ 150 Ohm±5% ОЖ 0-468 506Ту	1	
R18	Resistor ОМЛТ-0 5-В-5 1К Ohm± 5% ОЖ 0-467-107Ту	1	
R21	Resistor Р10Т 143	1	
Roc	Wire Resistor 2-СХ15Н60 GOST 12766 1-77	1	l=37mm, R not more than 0.5Ohm
C1	Capacitor ОСМБг0-2- 160- 20 ± 10 % ОЖ0 462-078Ту	1	
Д 1	Stabilizer Д814В СМ3. 362 012Ту	1	
Д 2	Diode Д231 А УЖ3 362 018 Ту	1	
Д 4	Diode Д 231 УЖ 3 367 018 Ту		
Д 5	Stabilizer Д 816А УЖ3 362 027Ту	1	
Д 6	Diode Д 231 А УЖ 3 362 018Ту	1	
Д 11	Diode Д223Б СМ3. 362 013Ту	1	
пр1	Fuse сп-15,30В Ту16-522 001 -76	1	
пр2,пр3	Fuse пц -30- 2 АГО-481 501 Ту	2	
пр4,пр6	Fuse сп- 10,30В Ту16 - 522 001 - 76	3	
пр8,пр12	Fuse ВП1 - 2 - 2А 0 ЮО 480 003Ту	5	
P1	Relay РЭСb РФ0. 452. 104Д РФ4.523. 009Ту	1	
P2	Relay ТКЕ 52ПД1 Ту872 - 66	1	
C2	Capacitor МБМ - 160 - 0.5 ± 10% ОЖ0 462-032Ту	1	
T1,T3	Transistor n215 СМ3. 365. 012 Ту	3	
T4 T6	Transistor n210A ЩМ3 365. 037Ту	3	
Тр1	Transformer Р10Т 027	1	
P3	Electromagnetic relay type РЭС 10		
	РС4 529. 031- 05 РС0 452. 049 Ту	1	
Ш1	Connector ШР Г 28П7Ш9 ГЕО. 364 108Ту	1	
Ш2	Plug 2РМГД 27Б 19Ш5Е2Б ГЕО 364 140Ту	1	
Ш3	Plug РП10-11 ГЕО. 364 004Ту	1	
Ш3	Socket РП10- 11 ГЕО 364 004Ту	1	
P4	Electromagnetic relay type РЭС10 РС4 529 031 -06		
	РС0 452 049Ту	1	

23
I-615

ЕСКД

PH10 00033

NO	SHT	DOC NO	SIGN	DATE
DRAWN		N Yesudas		22.12.84
DT.CHKD				24.12
M,D.C.		S.R.NAIR		18.1.85
V.OFFR		A.K.KUNDU		15.2.85
		NAME	SIGN	DATE

VOLTAGE REGULATOR
PH-10
SCHEMATIC CIRCUIT DIAGRAM

SHEET | WEIGHT | SCALE.

TOTAL SHEETS

ORDNANCE FACTORY
PROJECT
HYDERABAD

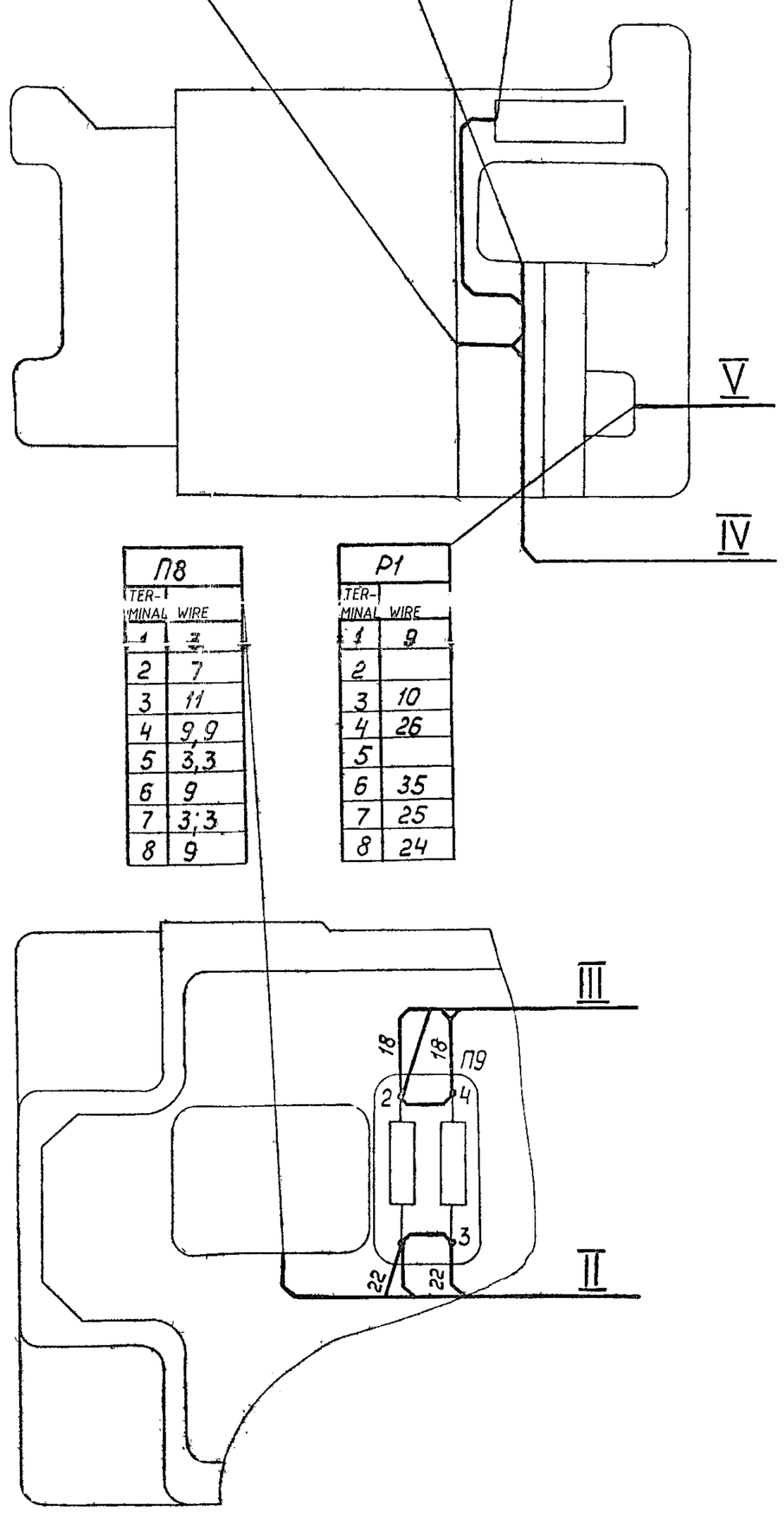

П10 Terminal	wire
1	3
2	
3	10
4	14
5	8
6	24
7	43
8	21
9	40
10	14
11	41
12	42
13	11
14	9
15	35
16	25
17	6
18	35

П12 Terminal	wire
1	26
2	37
3	
4	

П7 Terminal	WIRE
1	11;11
2	13;13

П1 TERMINAL	WIRE
1	16;16
2	17;17
3	12;12
4	15;15
5	1
6 (26)	36
7	14;14
8	14
9	11;11;11
10	3;3
11 (20)	34

Тр1 TERMINAL	WIRE
1	35;35
2	34
3	9;9
4	8;8

П3 TERMINAL	WIRE	П2 TERMINAL	WIRE	П4 TERMINAL	WIRE
1(э)	13;13	1(э)	12;12	1(к)	18;18
2(б)	43;43	2(б)	44;44	2(э)	15;15
3(к)	22;22	3(к)	22;22;22	3(б)	40;40

Ш3 TERMINAL	WIRE
1А	10;10
2А	8;8
3А	9;9
4А	21;21
5А	7;7
6А	
1Б	10;10
2Б	8;8
3Б	9;9
4Б	21
5Б	7

П8 TERMINAL	WIRE
1	7
2	7
3	11
4	9,9
5	3,3
6	9
7	3;3
8	9

Р1 TERMINAL	WIRE
1	9
2	
3	10
4	26
5	
6	35
7	25
8	24

Ш2 TERMINAL	WIRE
1	12
2	10;10
3	13
4	11
5	15
6	14
7	35;35
8	25,25
9	9
10	8
11	16
12	17
13	
14	
15	
16	
17	18
18	
19	

Ш1 TERMINAL	WIRE
1	1
2	6
3	36;34 (20)
4	24;24
5	9
6	37
7	

Р2 TERMINAL	WIRE
А	3
Б	6,6
1	22
2	23
3	
4	23
5	9
6	

П5 TERMINAL	WIRE	П6 TERMINAL	WIRE
1(к)	18;18	1(к)	18;18;18
2(э)	16;16	2(э)	17;17
3(б)	41;41	3(б)	42;42

1 Technical requirements are as per HO 010 001

2 Carryout soldering using solder noccy 61-0,5 GOST 21930-76 carryout soldering of semi-conductors Д2, Д4, Д6, T2, T3, T4, T5, T6 and wires, running to terminals of board n10 using solder nock50-18 GOST21930-76 Solder using the flux ФКп ОСТ4 го 033 000

3 Put sleeves Ref Nos 71 to 75 on the ends of wires in compliance with cross section of wire and marking according to the diagram Carryout marking of sleeves using tape for type writer GOST 6048-67 or special ink as per instruction Бко, 029 000

4 Put sleeves Ref.No.94 Ref No 92 on the diode leads Д2, Д4, Д6, Put sleeve Ref No 90 on the free terminal of relay Put sleeves, by first applying adhesive ХВК-2а Technical specification Ту6-10-463-75 on their inside surface,

5. Wiring is carried out with wire Ref Nos 85 to 88

6 Make inscriptions using enamel МС-17 black Technical specif7cations Ту6-10-1012 -78 on light black ground and enamel пф-115 white GOST 6465-76 on dark back ground

7 Marking of plug connectors with figures is given conventionally on the sides of wiring part of pins

8 Insulate the contact points between braid with sharp edges of body, chassis, units and devices with tape Ref no 96

9 Tie the wire in bundle using thread Ref No 97

10 Board n1 and chassis with boards n10, n12, n7 and relay P1 are displaeed for clarity

11 Instead of wire Ref No 85, 86, 87,88, it is allowed to use wire МГШВ-10 5, МГШВ-1 0,75, МГШВ-1 1,5 Technical specification Ту16-505 437-73 correspondingly

МГШВ-10.35

17
I-615

ЕСКД

PH10. 000 МЭ

SNO	SHT	DOC NO	SIGN	DATE
DRAWN		N Yesudas		21 12 86
EDT&CHKD		R. Samuel		
F/M,DC		S R Nair		16 1 85
DIV.OFFR		A.K.KONDU		15 2 18
		NAME	SIGN	DATE

VOLTAGE REGULATOR
PH-10
ELECTRIC WIRING DIAGRAM

SHEET	WEIGHT	SCALE
5		1:1
Sheet no 1	TOTAL SHEETS	

ORDNANCE FACTORY
PROJECT
HYDERABAD

Conductor	Ref	From	To	Length cm.	Remarks
1	88	Ш1:1	П1:5	33	МГШВ 1,5
3	88	П1:10	П8:5	33	МГШВ 1,5
3	85	П8:1	С1	40	МГШВ 0,35
3	85	П8:5	П10:1	40	– do –
3	87	П8:7	П1:10	57	МГШВ 0,75
3	85	П8:7	Р2:А	40	МГШВ 0,35
6	85	П10:17	Р2:Б	40	МГШВ 0,35
6	85	Р2:Б	Д4:„+"	40	МГШВ 0,35
6	87	Д4:„+"	Ш1:2	57	МГШВ 0,75
7	85	П8:2	Ш3:5А	40	МГШВ 0,35
7	85	Ш3:5А	Ш3:5Б	40	– do –
8	85	П10:5	ТР1:4	40	МГШВ 0,35
8	85	Тр1:4	С1	40	– do –
8	85	Ш3:2А	Ш2:10	40	"
8	85	С1	Ш3:2Б	40	"
8	85	Ш3:2А	Ш3:2Б	40	"
9	85	Р1:1	Ш3:3Б	40	"
9	85	П10:14	Тр1:3	40	"
9	85	Тр1:3	Д2:„+"	40	"
9	88	Д2:„+"	П8:6	33	МГШВ 1,5
9	85	П8:8	Ш3:3А	40	МГШВ 0,35
9	85	Ш3:3А	Ш3:3Б	40	– do –
9	85	Ш1:5	Д2:„+"	40	"

18
I-615

Восстановлен с подлинника.

(Подп) 12 12 78

26571

3	АЩЛ 797-80	(Подп)	#980	РН10.000 МЭ	2

Conductor	Ref	From	To	Length cm	Remarks
9	86	Р2:5	П8:4	44	МГШВ 0,5
9	85	П8:4	Ш2:9	40	МГШВ 0,35
10	85	Ш2:2	П10:3	40	- do -
10	85	Ш2:2	Ш3:1А	40	"
10	85	Ш3:1А	Ш3:1Б	40	"
10	85	Р1:3	Ш3:1Б	40	"
11	85	П8:3	П7:1	40	МГШВ 0,35
11	85	П7:1	П1:9	40	- do -
11	85	П1:9	Ш2:4	40	"
11	85	П1:9	П10:13	40	"
12	85	Т2:Э	П2:1	40	МГШВ 0,35
12	85	П2:1	П1:3	40	- do -
12	85	П1:3	Ш2:1	40	"
13	85	Т3:Э	П3:1	40	"
13	85	П3:1	П7:2	40	"
13	85	П7:2	Ш2:3	40	"
14	88	Д2:.–"	П1:7	33	МГШВ 1,5
14	85	П1:7	Ш2:6	40	МГШВ 0,35
14	85	П1:8	П10:10	40	-DO-
15	–	Т4:Э	П4:2		Emitter lead
15	86	П4:2	П1:4	44	МГШВ 0,5
15	85	П1:4	Ш2:5	40	МГШВ 0,35
16	–	Т5:Э	П5:2		Emitter lead
16	86	П5:2	П1:1	44	МГШВ 0,5
16	85	П1:1	Ш2:11	40	МГШВ 0,35
17	–	Т6:Э	П6:2		Emitter lead
17	85	П1:2	Ш2:12	40	МГШВ 0,35
17	86	П6:2	П1:2	44	МГШВ 0,5

19
I-615

Инв № подл 26571
Подпись и дата (подп) 12.12.78
Взам инв №
Инв № дубл
Подпись и дата

Conductor	Ref.	From	To	Length cm	Remarks
18	–	Т5 К	П5·1		Collector lead
18	86	П9 2	П5·1	44	МГШВ 0,5
18	–	Т4 К	П4.1		Collector lead
18	86	П4 1	П9:2	44	МГШВ 0,5
18	–	П9 2	П9·4	3	ММ 0,8
18	86	П9.4	П6·1	44	МГШВ 0,5
18	–	Т6:К	П6:1		Collector lead
18	85	П6 1	Ш2:17	40	МГШВ 0,35
21	85	П10· 8	Ш3:4А	40	- DO .
21	85	Ш3 4А	Ш3:4Б	40	"
22	–	П9.1	П9.3	3	ММ 0,8
22	85	Т3·К	П3:3	40	МГШВ 0,35
22	85	П3:3	П2·3	40	- DO -
22	85	Т2·К	П2:3	40	"
22	85	П2:3	П9 1	40	"
22	88	П9.3	Д6:"+"	33	МГШВ 1,5
22	*86	П9:1	Р2:1	44	МГШВ 0,5
23	86	Р2 4	Р2 2	44	МГШВ 0,5
24	85	Ш1 4	П10:6	40	МГШВ 0,35
24	85	Ш1.4	Р1 8	40	- DO -
25	85	Ш2 8	П10:16	40	МГШВ 0,35
25	85	Р1 1	Ш2·8	40	- DO -
26	85	Р1·4	П12:1	40	МГШВ 0,35
34	88	Тр1:2	~~А1 И~~ Ш1:3	33	МГШВ 1,5 (4)

20
I-615

Изм	Лист	№ докум.	Подп.	Дата
4	1	ЯЩЛ 81-81		20.4.81
3		ЯЩЛ 797-80		4.9.80

РН10.000 МЭ

Лист 4

Инв. № подл. 26571 | Подп. и дата (Подп) 12 12 78 | Взам. инв. № | Инв. № дубл. | Подп. и дата

Conductor	Ref	From	To	Length cm	Remarks
35	86	Р1·6	Д6·,–"	44	МГШВ 0,5
35	88	Д6 –"	Тр1:1	33	МГШВ 1,5
35	87	Тр1·1	Д4:,–'	57	МГШВ 0,75
35	85	Д4 –"	П10·15	40	МГШВ 0,35
35	85	Д4..–"	Ш2·7	40	– DO –
35	85	Ш2:7	П10·18	40	"
~~35~~	~~88~~	~~Ш1:3~~	~~П1:6~~	~~33~~	~~МГШВ 1,5~~ (4)
37	85	П12·2	Ш1 6	40	МГШВ 0,35
40	–	Т4:б	П4·3		Base lead
40	85	П4·3	П10·9	40	МГШВ 0,35
41	–	Т5·б	П5:3		Base lead
41	85	П5:3	П10:11	40	МГШВ 0,35
42	–	Т6·б	П6:3		Base lead
42	85	П6:3	П10:12	40	МГШВ 0,35
43	85	Т3:б	П3:2	40	– DO –
43	85	П3:2	П10:7	40	"
44	85	Т2·б	П2:2	40	"
44	85	П2:2	П10:4	40	"

21/I.615

2.1 / I-615

(подп.) 12.12.78

25571

4 1

РН10.000 МЭ

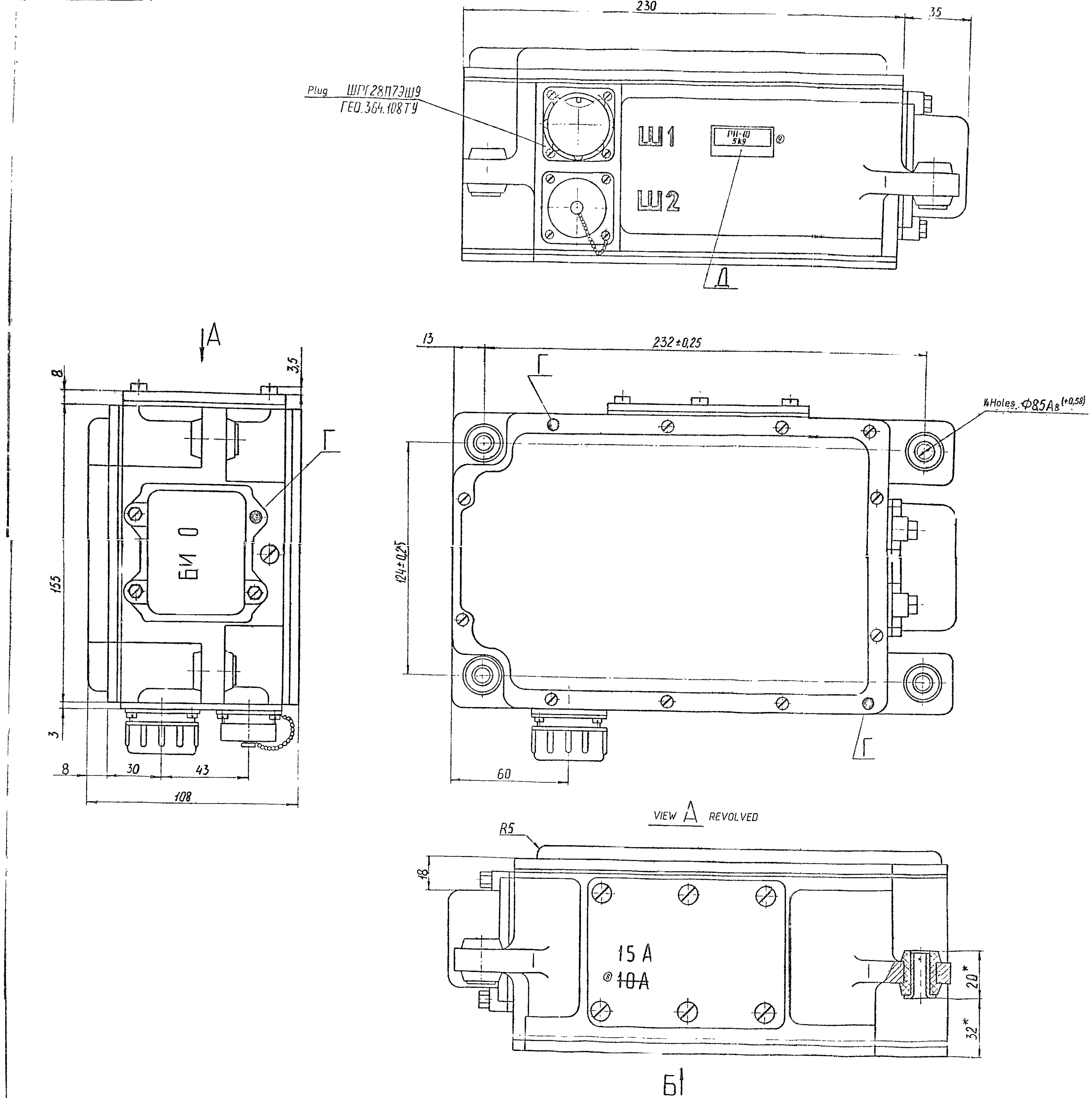

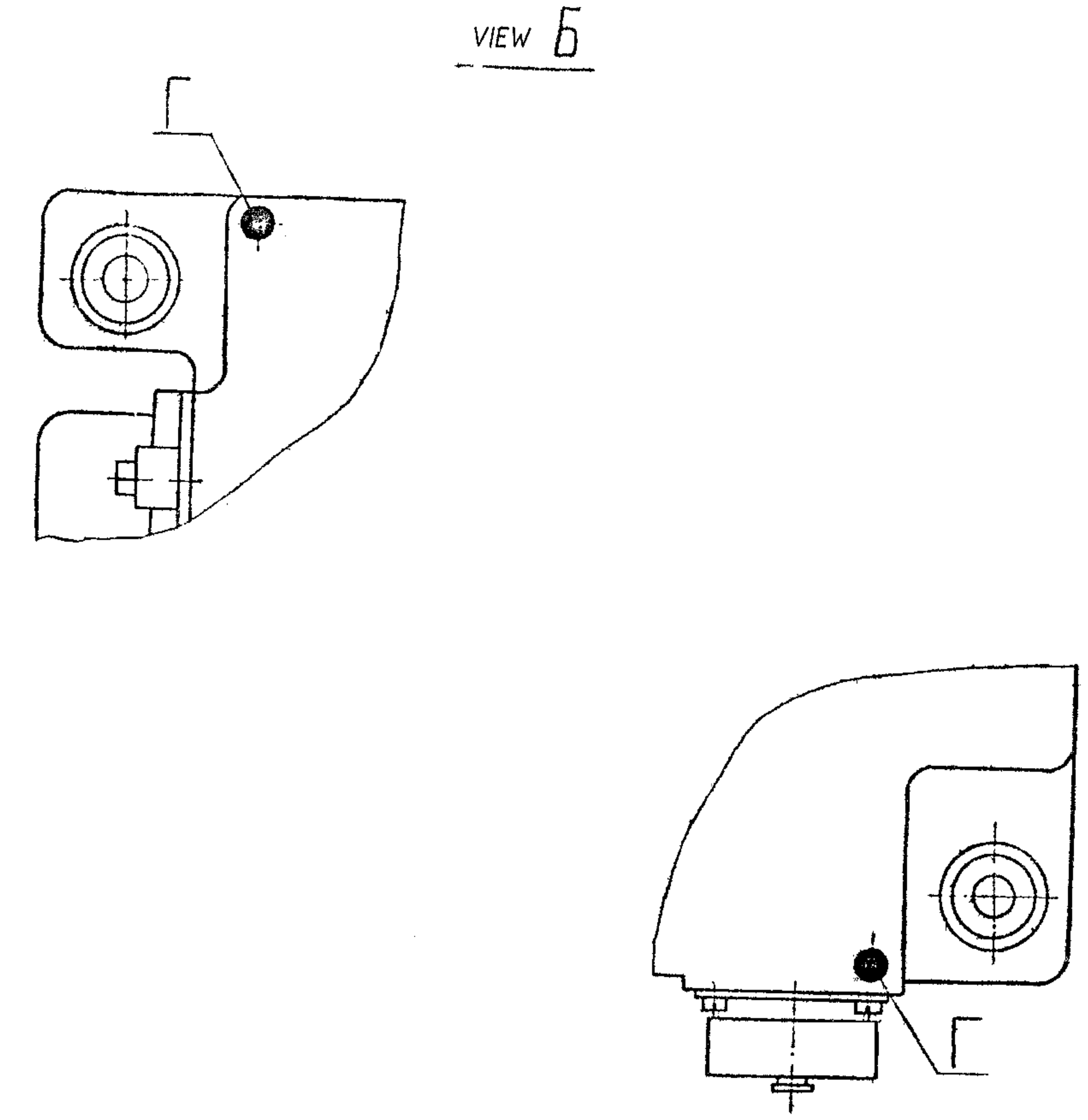

1.*Dimensions correspond to cam pressed condition of shock-absorbers.

2. Deviation of each bearing surface of item for fastening of regulator from common adjacent plane should not exceed 1mm.

3 Deviations of centre to centre distance with respect to hole of body(without account of shock-absorber).

4.Diameter of bearing washers, installed on shock-absorber while mounting the regulator on item should be 18 to 20mm at thickness 1.5 to 2mm

5. While installing the regulator on item ,it is necessary to ensure the clearance between the regulator and parts of item of atleast 5mm.

6. Installation of regulator should ensure acces to cover of fuse.

7 Г-Place for TID and customer stamps.

8 Д-Place for serial number.

9 Waterprofness of mating part of plug connector should be ensured while installing on item by consumer.

PH 10.000Г4

SN	DOC NO	SIGN	DATE
DRAWN	N Yesudas	[signature]	20.12.84
EDT,CHKD	B Samuel	[signature]	
F/M,DC	S R Nair	[signature]	
DIV.OFFR	A.K.KUNDU	[signature]	15.2.85
	NAME	SIGN	DATE

VOLTAGE REGULATOR
PH-10
OUTLINE DRAWING

SHEET	WEIGHT	SCALE

TOTAL SHEETS

ORDNANCE FACTORY PROJECT HYDERABAD

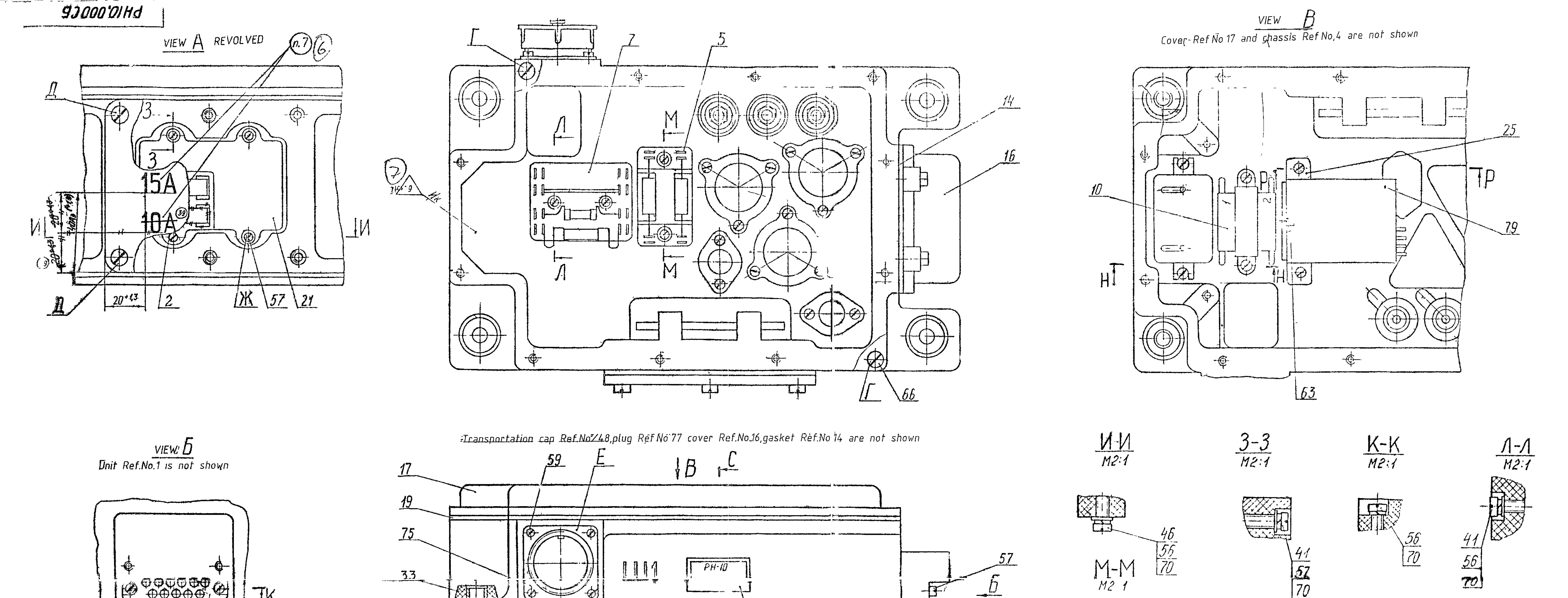

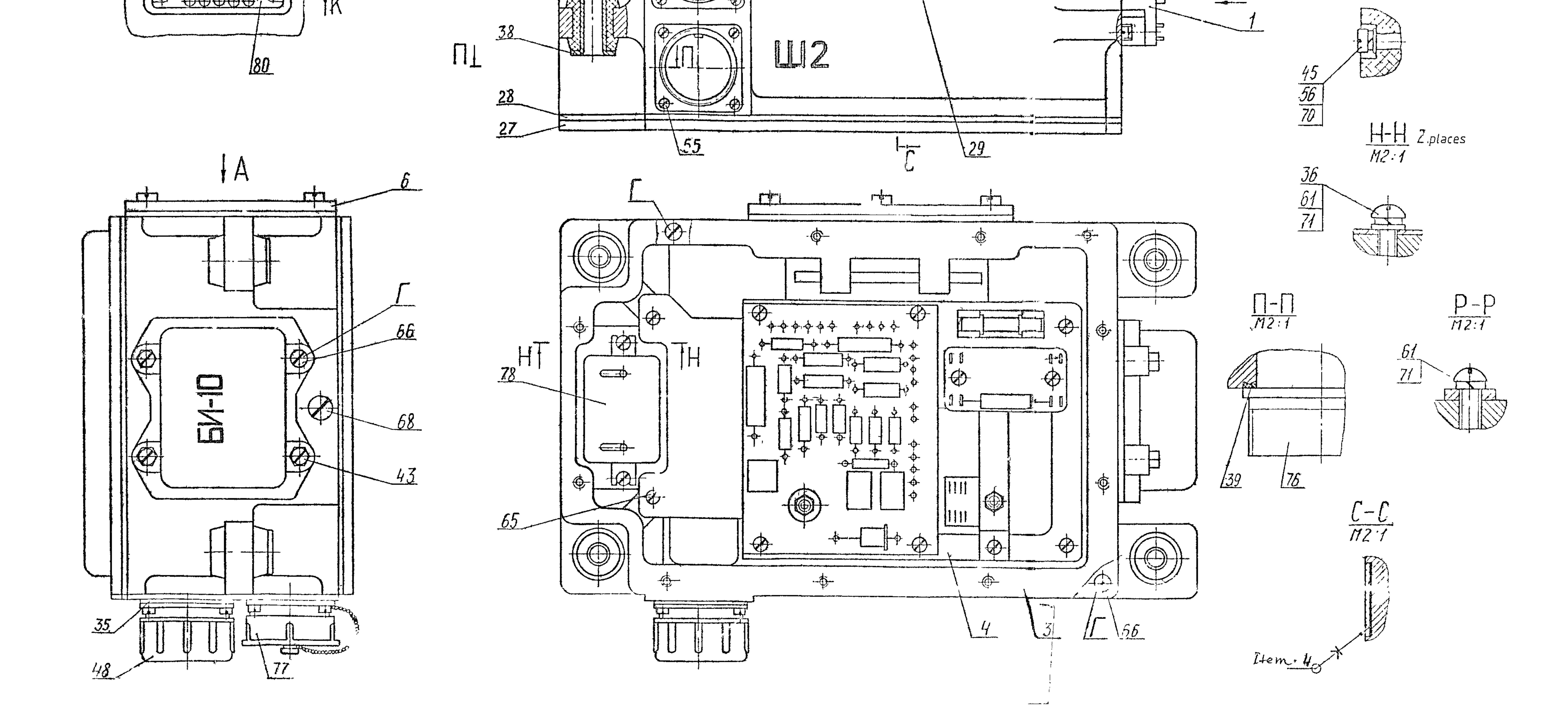

1 Coat surface E of plug Ref No 75 with two layers of enamel XB-124 grey GOST 10144-74

2 Secure bolt Ref No 43, screws Ref No 55, 57, 59, 63, 65, 68, and screws Д of cover Ref No 6 with enamel XB-124 grey GOST 10144-74

Coat heads of screws, except Г Ж with the same enamel

3 Fill the cavities under the screw head Ref No 68 with compound Э 6-1С ОСТ84-167-70

4 Compound Э6-1С ОСТ84-167-70

5 Fill the cavities under screw; heads Г Ж using sealing mastic as per GOST 18680-73,

6 Projection of rubber gaskets Ref Nos 19, 28 with respect to the body of unit Ref, No 3 not exceeding 1mm is allowed

7 Mark using stencil, type 10 as per HO 010 007 with enamel MC-17 black technical specifications Ту6-10-1012-78

8. Regulator should meet the requirements of technical specifications PH10 000 Ту1

9. Stamp after checking the quality of soldering

16 I-615

ЕСКД

PH10.000C6

SL.NO	SHEET	DOC.NO	SIGN	DATE
DRAWN BY	N Yesupas			
EDITED AND CHECKED BY				
FOREMAN OF DC	S.R.Nair			
DIVISIONAL OFFICER	A.K.Kundu			
	NAME	SIGN	DATE	

VOLTAGE REGULATOR
PH-10
ASSEMBLY DRAWING

SHEETS	WEIGHT	SCALE
	6.5	1:1

TOTAL SHEETS

ORDNANCE FACTORY PROJECT HYDERABAD

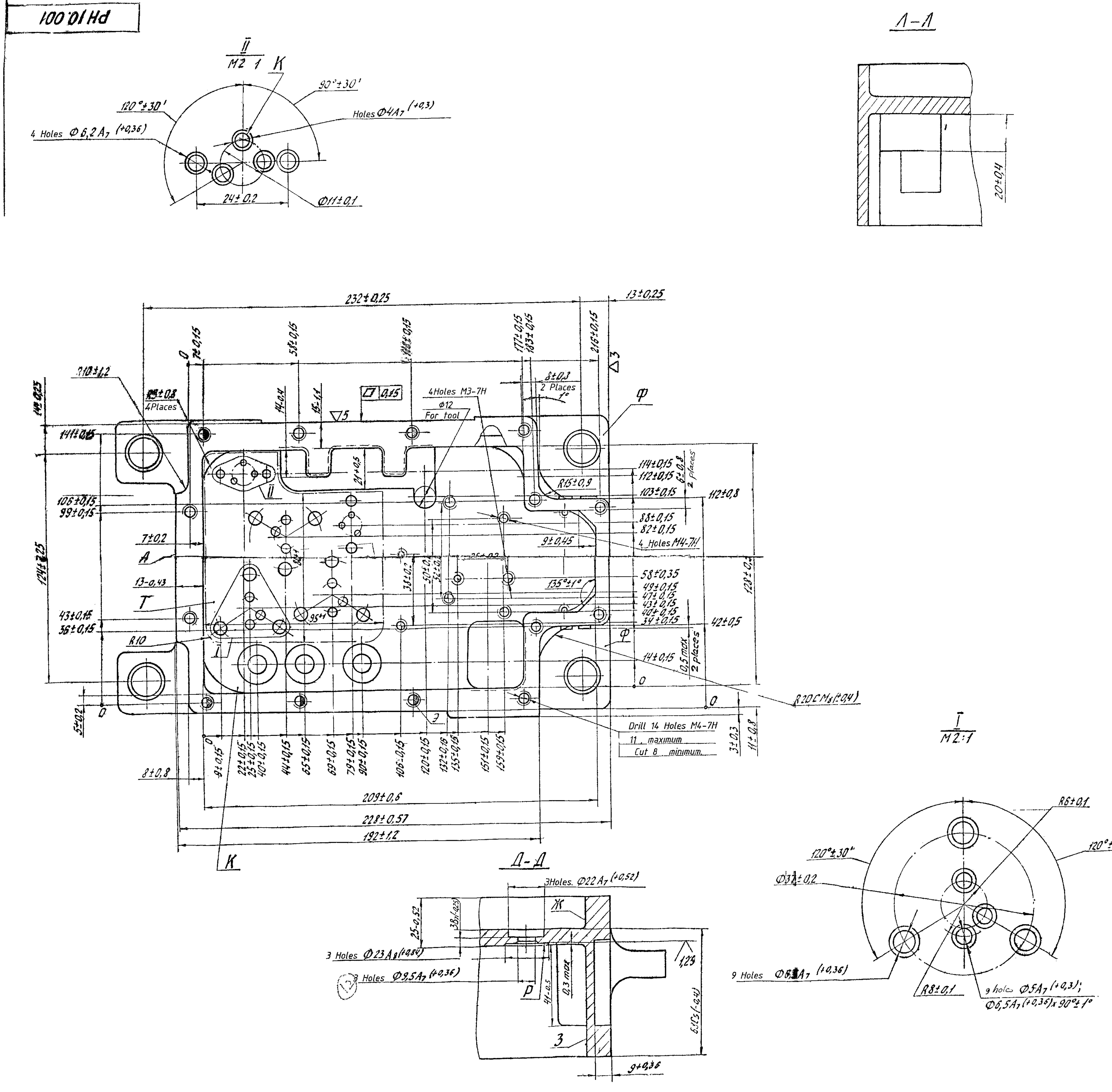

3 'Unspecified casting radii are R3,max

4, Pattern drafts of 1°30' towards increased body, for bosses and upto 2° towards increased body for lugs are allowed

6 Casting surface-remainder of pouring gate flash are allowed to be machined provided dimensions are preserved

7 Sharp edges are not allowed Blunt with chamfer or radius ≈0 5

8 Internal angles of machining are ≈0 5

9 Displacement of one part of casting with respect to the other part should not exceed 1mm along metal mould parting line, short run of depth 0 5mm and roundness of sharp edges upto 1mm are allowed, provided dimensions are preserved

11 Internal surface, mating surface of covers,holes, and also places designated with symbol Ӿ -are without varnish coating. Threaded holes, hole y without varnish coating,

12. Permissible degree of porosity on surfaces T B P is as per standard

13 Welding of cavities followed by their machining upto dimensions specified in the drawing on surfaces Л,М,П is allowed

14 Surface Ж,И,3 are without pattern drafts except contour designated by dotted line

15 Along internal contour Ж and 3 of dark sports are allowed after machining

16 Asymmetry of dimension 43 with respect to dimension 50,63) is 0 8mm, that of dimensions 54 with respect to dimension 62 is 0 5mm

17 Impregnation with varnish БЛ -725r Ty6-10-866-75 in vacuum is allowed,

18 Provided chamfers on holes $0.5^{+0.3}$x45°,

19 While machining surface 3 cutting in or short run in the bottom of body should not exceed 0 5mm

20 Roughness of the surface T should be ∇6 to ∇7.

21 Carryout inscription Ш1 and Ш2 s using stencil with type 10 as per HO 010 007 enamel Mc-17 grey, Ty6-10-1012-78

22 Asymmetry of dimension 38 with respect to dimension 60 is 0 5mm.

23 Remainder of technological ribs with height upto 13 an width 9-0 5 on surface X are allowed

24 While machining the legs cutting-in 50 the wall of body should not exceed 2mm from the side of plane M in 2places

25 Holes Э may be brought to surface

26 Nonflatness of surface Л,М, П should not exceed 0 15m

27 Coating Anodic oxidation chromtizing / enamel MЛ-165, grey GOST 12034-77 Ш Ж1.

28 Select varnish coating in compliance with OST3-1928-73

29 Blunt sharp edges of holes K with chamfers 0 1 to 0 35x45° from the side of surface I

30 Roughness of surface K C Ф - Rz80

31 It is allowed to use enamel MЛ-12, grey,GOST 9754-76 or enamel MЛ-165, silver, GOST 12034-77 (grey GOST 12034-77 (instead of enamel MЛ-165

32 Mark the smelting No.

76
I-615

PH10.001

SNo SHT	DOC NO	SIGN	DATE		SHEET	WEIGHT	SCALE
DRAWN	N.Yesudas		20.12.84	BODY	6	18,5	1:1
EDT/CHKD	B.Sarvesan				Sht. No. 1	TOTAL SHEETS	
F/M,DC	S.R.NAIR				ORDNANCE FACTORY PROJECT HYDERABAD		
DIV.OFFR	A.K.KUNDU			Casting II - OST 3-4227-79. АЛ9 KTS ГОСТ 2685-75.			
	NAME	SIGN	DATE				

PH10.001

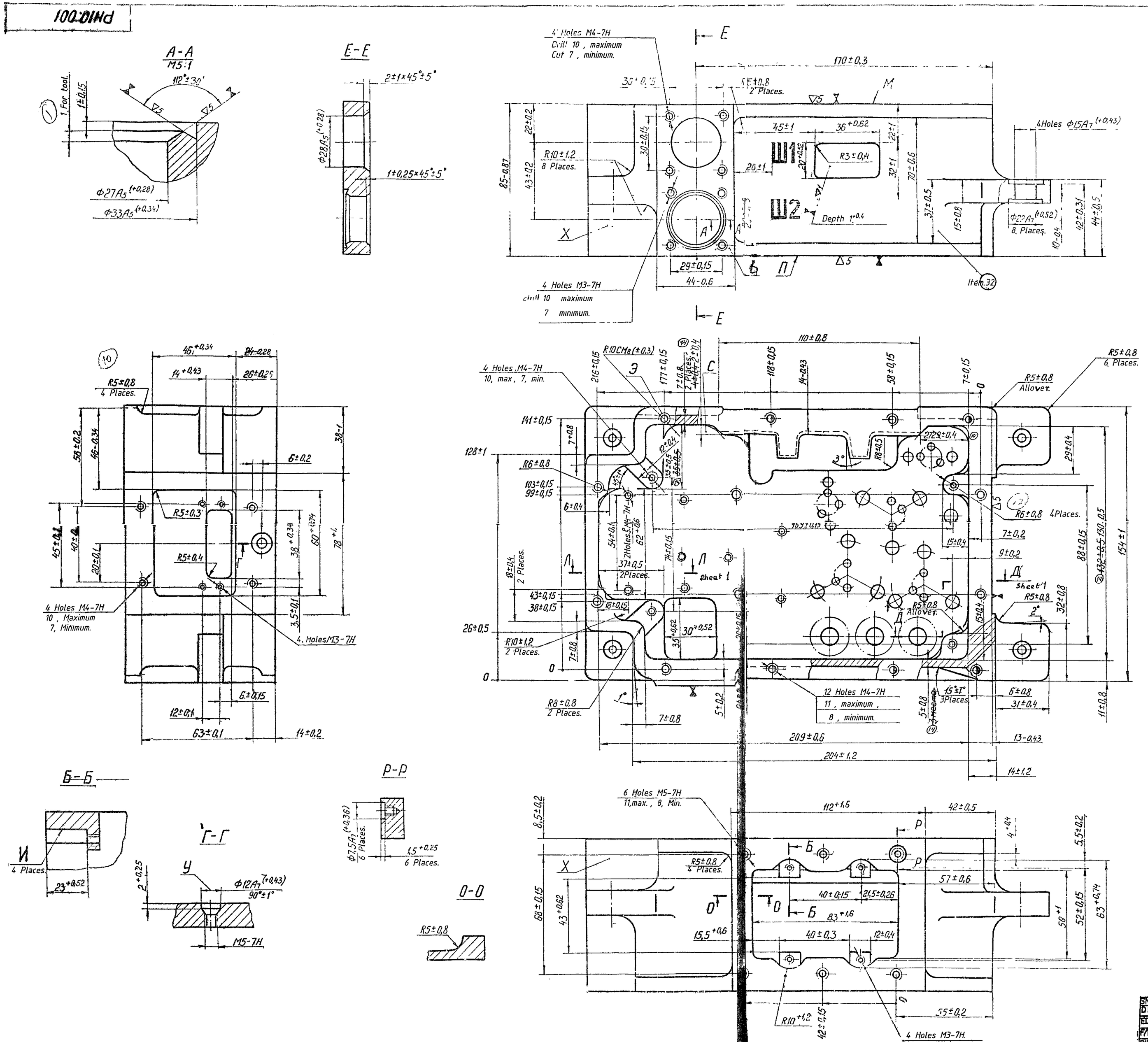

SNO	SHT	DOC NO	SIGN	DATE
DRAWN		R.H.PRASAD.		26.12.84.
EDT&CHKD		D.K. SRINIV		18.1.85
F/M,DC		S.R.NAIR.		18.1.85
DIV.OFFR		A.K.KUNDU		16.2.85
		NAME	SIGN	DATE

PH10.001

BODY

SHEET	WEIGHT	SCALE
6		

SHT.NO. 2 TOTAL SHEETS

ORDNANCE FACTORY PROJECT HYDERABAD

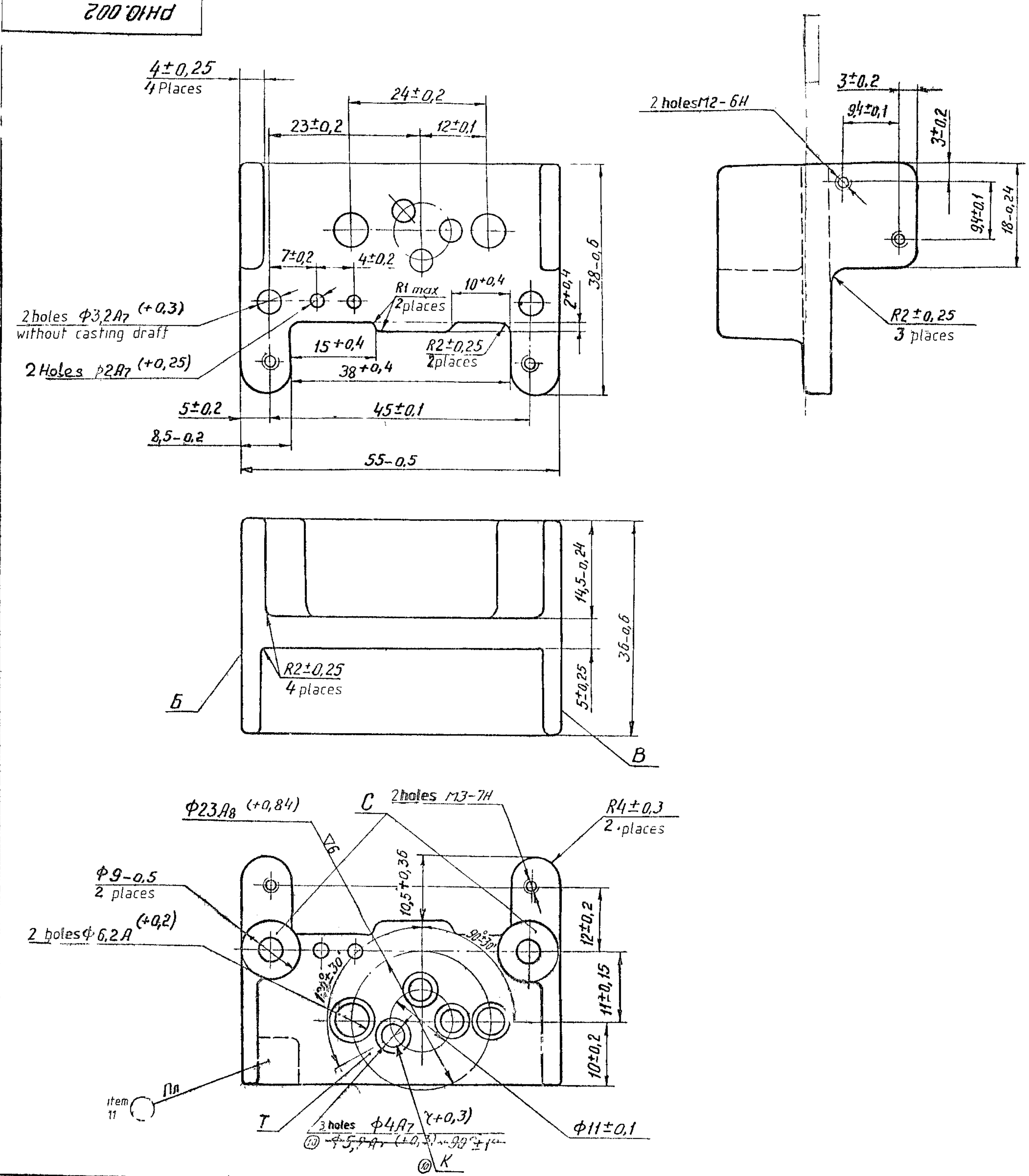

∇4 (∇)

2. Unspecified casting radii are R1,max.
3. Provide pattern drafts 1° to the side of decreased dimensions.
4. Cavities and traces from knockout on surface T are not allowed.
5. Blunt sharp edges and burrs are not allowed.
6. Coating: Chemically, parkerized.
7. Roughness of machining holes is ∇3, that for holes chamfer is $0.5^{+0.3} \times 45° \pm 1°$.
8. Sinking traces from pushes upto 0.5mm on surface C are allowed.
9. Parting line on surface Б and В are allowed.
10. Cavities in 2 holes $\phi 3\,2A7^{(+0.3)}$ are allowed.
11. Mark serial number of seat with type 3 as per HO.010.007. Hight of digit is 0.5 to 0.7.
12. Blunt sharp edges of holes K with chamfers 0.1 to 0.35x45° from the side of surface T.

(11) Material Casting $\frac{\text{Г-ОСТ3-4227-79}}{\text{АЛ2Д ГОСТ2685-75}}$

78 / I-6'5

ЕСКД

PH10.002

SNO	SHT	DOC NO	SIGN	DATE
DRAWN		N Yesudas		22.12.84
EDT, CHKD		B. Sarvesh		23.12
F/M, DC		S R Nair		28.1.85
DIV.OFFR		A.K.Kundu		19.2.85
		NAME	SIGN	DATE

BODY

SHEET	WEIGHT	SCALE
Б	0,04	2:1

TOTAL SHEETS

ORDNANCE FACTORY PROJECT HYDERABAD

PH10.004

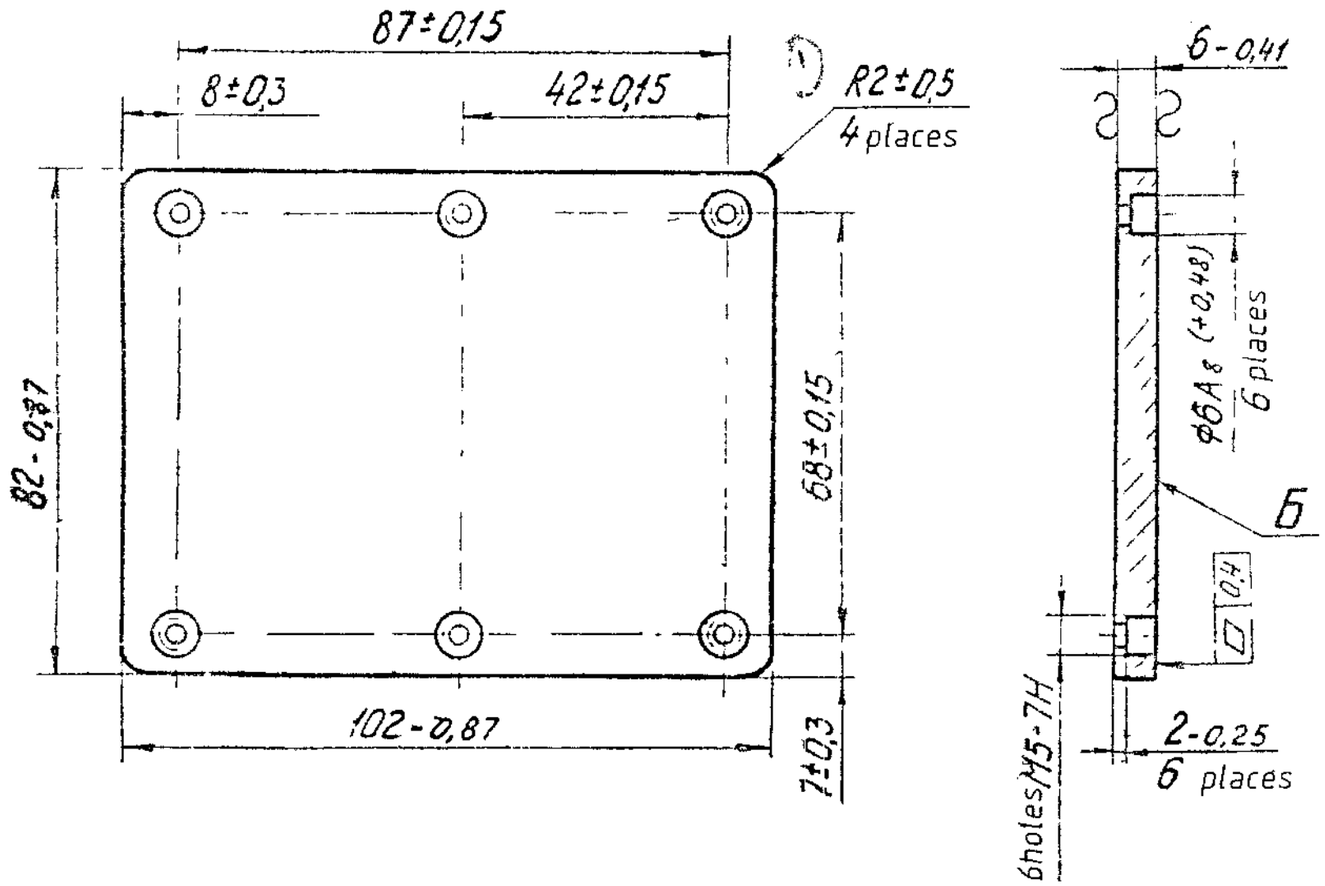

1. Alternate material sheet Д16Т-6 GOST 21631-76.
2. Surface Б and holes are without paint coating.
3. Micks on surface Б are not allowed.
4. Tool marks on surface Б at a distance 15mm from edges are not allowed. Tool marks to a depth not exceeding 0.5mm are allowed on the rest of surface Б.
5. Coating Anodic oxidation, chromatizing, enamel МЛ-165 grey GOST 12034-77 III Ж1.
6. Select paint and varnish coating in compliance with OST3-1928-73.
7. It is allowed to use enamel МЛ-12 grey GOST 9754-76 or enamel МЛ-165 silver GOST 12034-77 instead of enamel МЛ-165, grey GOST 12034-77.

79
I-615

ЕСКД

PH10.004

SNO	SHT	DOC NO	SIGN	DATE
DRAWN		N.Yesudas		22.12.84
EDT/CHKD		B. Sarkunl		31.12
F/M, D.C.		S.R.Nair		18 1 85
DIV.OFFR		A.K.KUNDU		15.2.85
		NAME	SIGN	DATE

COVER

Sheet Д16БТ-6
GOST 21631-76

SHEET	WEIGHT	SCALE
	0,13	1:1

TOTAL SHEETS

ORDNANCE FACTORY
PROJECT
HYDERABAD

15827 (Rodh) 28.73

FORMAT	ZONE	REF NO	DESIGNATION	DESCRIPTION.	QTY	REMARKS
				Technical papers		
12			PH10 010СБ	Assembly drawing		
				Parts		
11		1	P 10T 118	Gasket	2	Max qty 3nos
				Other items		
		2		Transistor П215		
				СИЗ 365, 012TY	1	
				MATerials		
		3		Wire MM-0 5		
				GOST 2112-71	90mm	Cadmium 3
				White tube		
				GOST 19034-73		
		4		Ш TB-40-230-2x0 4	45 mm	
		5		Ш TB-40-230-3x0 4	15mm	

26 I-615

(26 I-615)

PH 10 010

S NO	SHT	DOC NO.	SIGN	DATE
DRAWN BY		PRASAD	prasad	21 12 84
CHECKED		B. Sarkar	[signature]	26 12
F/M DC.		S R NAIR.	[signature]	18 1 85
DIV OFFR		A.K.KUNDU	AK	15.2.85

TRANSISTOR

SHT.NO.	TO.NO.OF.SH
1	1

PH 10.010 CБ

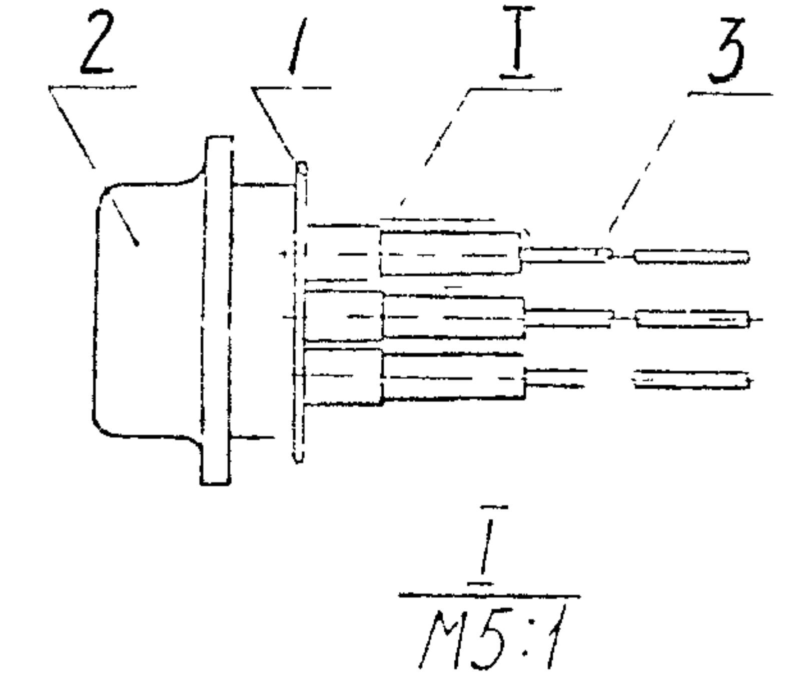

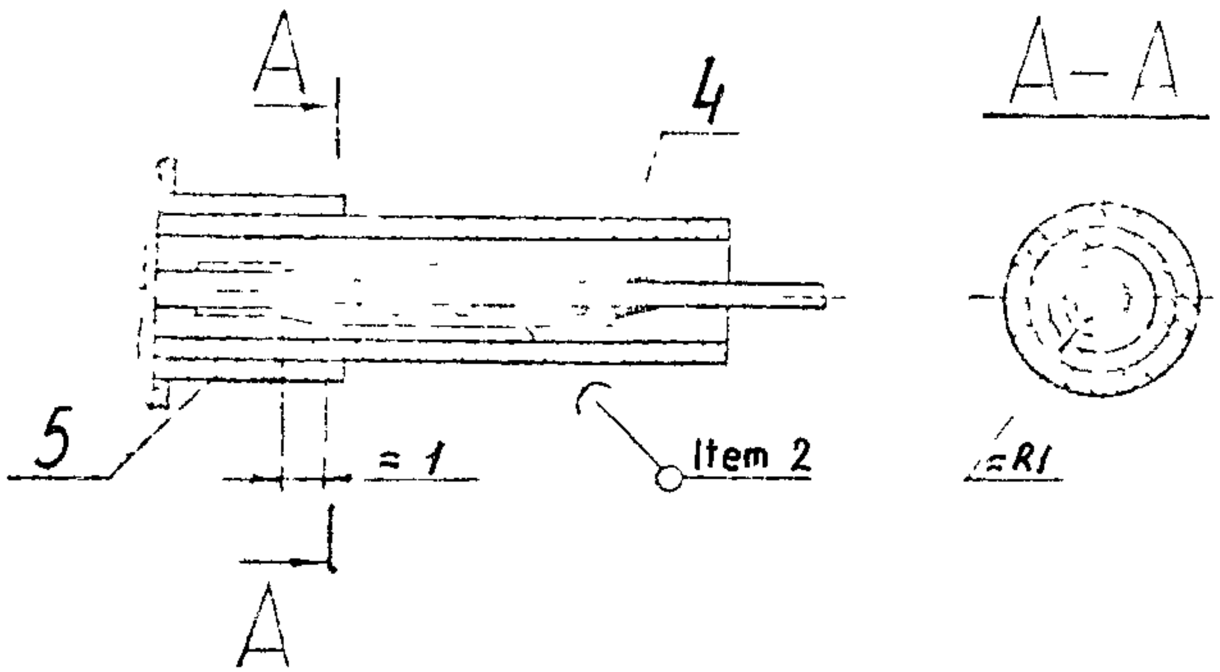

1 Thickness of pack of gaskets, Ref No 1 is 65 to 100mm

2 Solder ПОСК 50-18 GOST21930-76, flux ФКСп OST4 ГО 033 000

3 Bend flat section of lead of transistor, Ref No 2 in the form of chute,

4 Other technical requirements are as per СИ3.365.012ТУ and instructions И 1-80

27 / I-615

SLNO	SHEET	DOCNO	SIGN	DATE		
DRAWN BY		PRASAD	prasad	21 12 84	TRANSISTOR	PH 10. 010 CБ
EDITED AND CHECKED BY		B. B Sarkhel		24.12		SHEETS | WEIGHT | SCALE
FOREMAN OF DC		S R Nair		18.1.85	ASSEMBLY DRAWING	Б | 15g | 2:1
DIVISIONAL OFFICER		A.K.KUNDU		15.2.85		TOTAL SHEETS
		NAME	SIGN	DATE		ORDNANCE FACTORY PROJECT HYDERABAD

PH 10-010 CБ

PH10.011

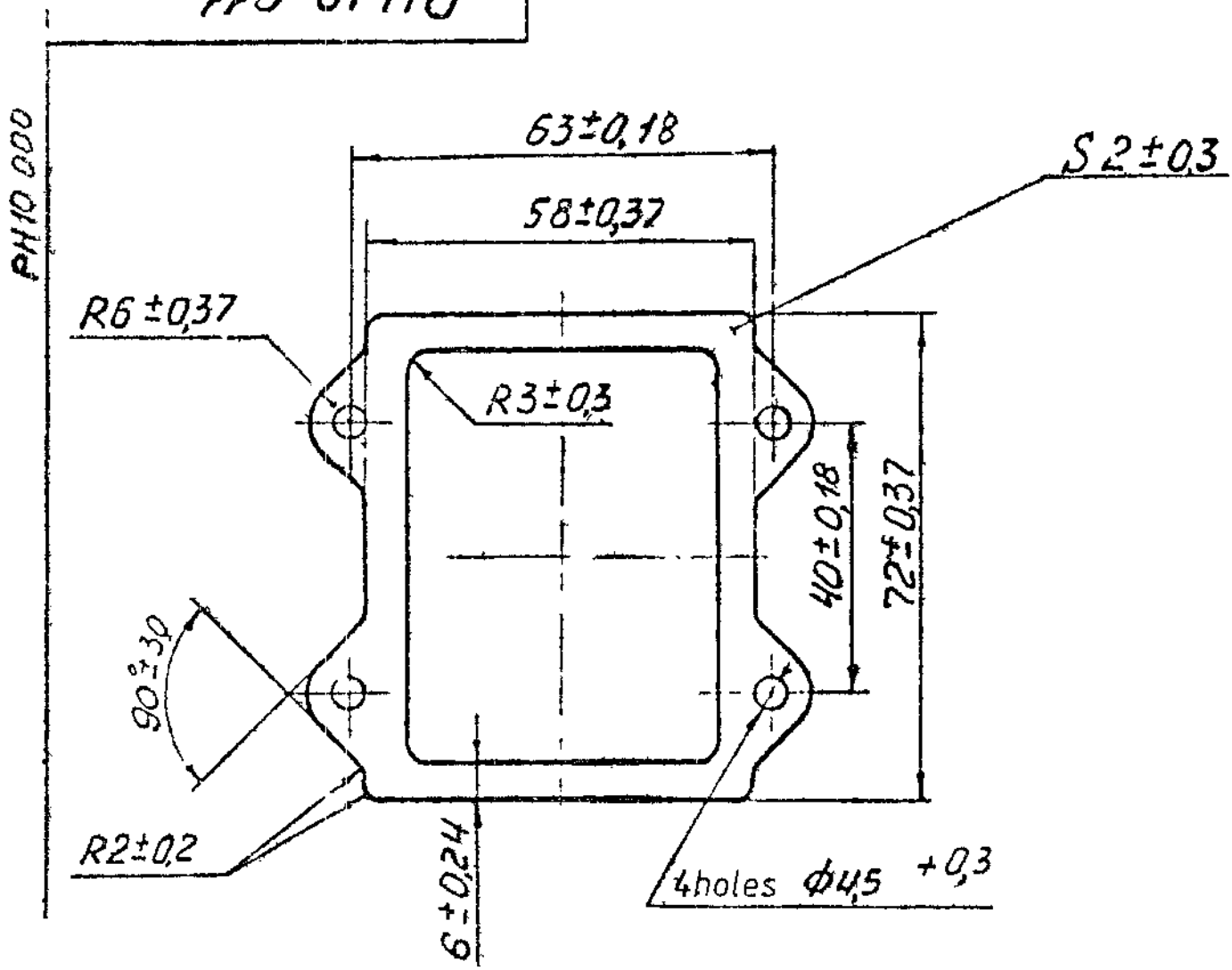

1 Altenate material is $\frac{\text{sheet } 254311\text{-}2}{\text{rubber } 4326\text{-}I}$ Ty005216-75.

2. It is allowed to use sheet as per Ty38005838-70.

3. Dimensions are provided with tool

4. Other technical requirements to parts are as per Ty005216-75

ЕСКД

82
I-615

PH10.011

SNO	SHT	DOC NO	SIGN	DATE
DRAWN		N Yesudas		22 12 84
EDT&CHKD		B. Samuel		31.12
F/M, D.C.		S R.Nair		18 1 85
DIV.OFFR		A.K.KUNDU		15.2.85
		NAME	SIGN	DATE

GASKET

Rubber 98-I
Ty005216-75

SHEET	WEIGHT	SCALE
6	0.005	1:1

TOTAL SHEETS

ORDNANCE FACTORY PROJECT HYDERABAD

PH 10.014

2,5

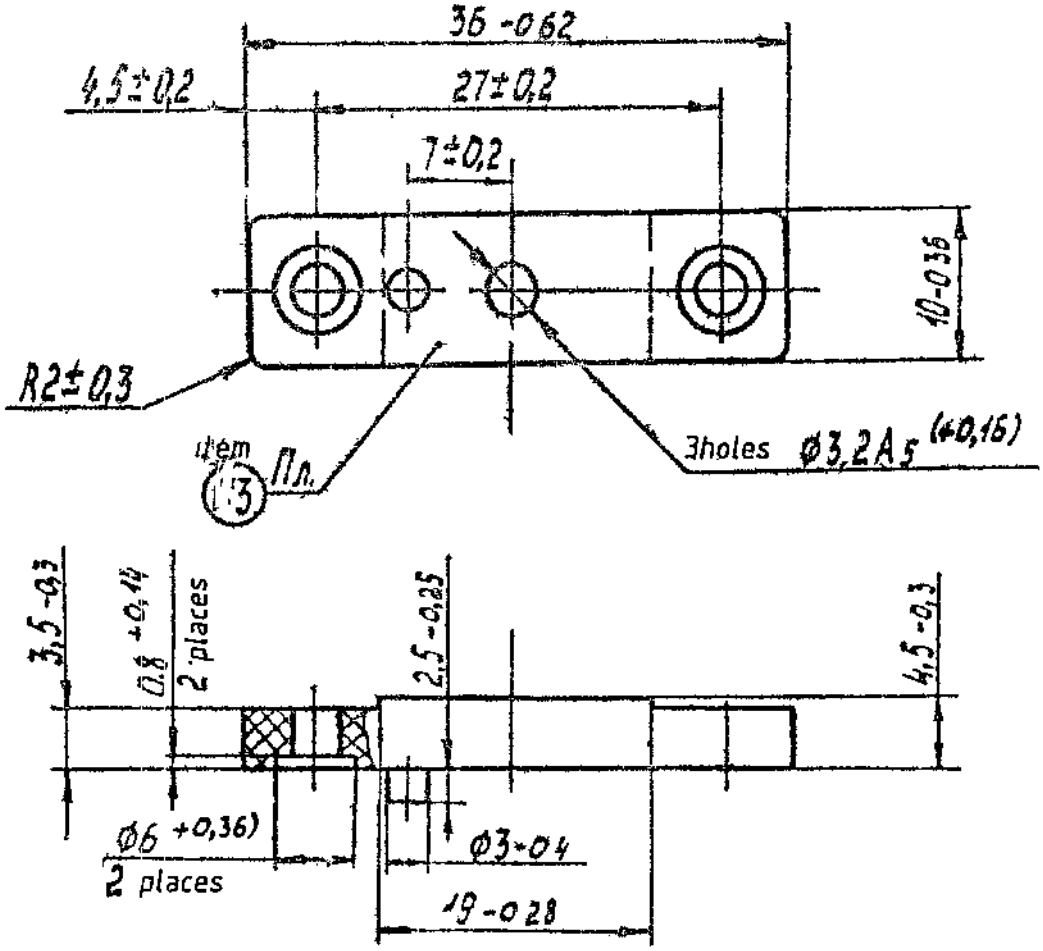

1. Drafts upto 1° towards increased imensions.
2. Alterante material is moulding material Ar-4C , GOST 20437-75, Д СВ-4-Р-2М, grade 0, GOST 17478-72.
3. Mark the serial number of seat with type 2 as per H0.010.007.
4. Perform heattreatment.
5. Other technical requirements are as per OST B 84-1602-78.

84
I-615

PH 10.014

84/I.615

SNO/SHT	DOC NO	SIGN	DATE
DRAWN	N.Yesudas		22 12 84
EDT&CHKD	B. Sarkar		31.12
F/M, D.C.	S.R.Nair		18 1 85
DIV.OFFR	A.K.KUNDU		15.2.85
	NAME	SIGN	DATE

BOARD

Moulding material Ar-4B
GOST 20437-75

SHEET	WEIGHT	SCALE
	0,0025	2:1
TOTAL SHEETS		

ORDNANCE FACTORY PROJECT HYDERABAD

PH10.015

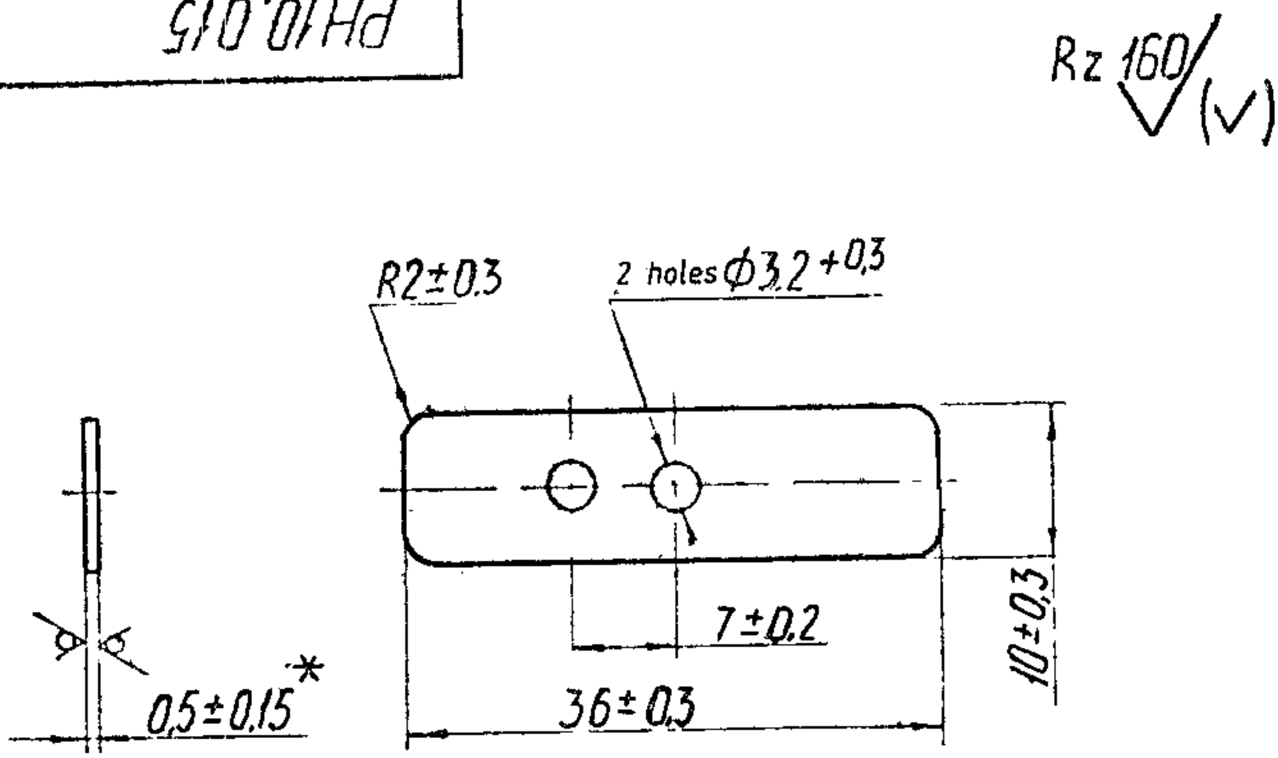

1. *Dimension is given for reference.
2. Other dimensions are provided with tool.
3. Coat with varnish ГФ-95 GOST 8018-70,
It is allowed to use varnish МЛ-92 GOST 15865-70.

85
I-615

ЕСКД

PH10 015

SNO	SHT DOC NO	SIGN	DATE
DRAWN	N. Yesudas	[signature]	22 12 84
EDT & CHKD	S. Samuel	[signature]	31.12
F/M DC	S R. Nair	[signature]	18 1 85
DIV.OFFR	A.K. KUNDU	[signature]	15 2.85

GASKET

Glass textolite CT-I-0.5 GOST 12652-74

SHEET	WEIGHT	SCALE
5	0.002	2:1

TOTAL SHEET

ORDNANCE FACTORY PROJECT HYDERABAD

PH10.016

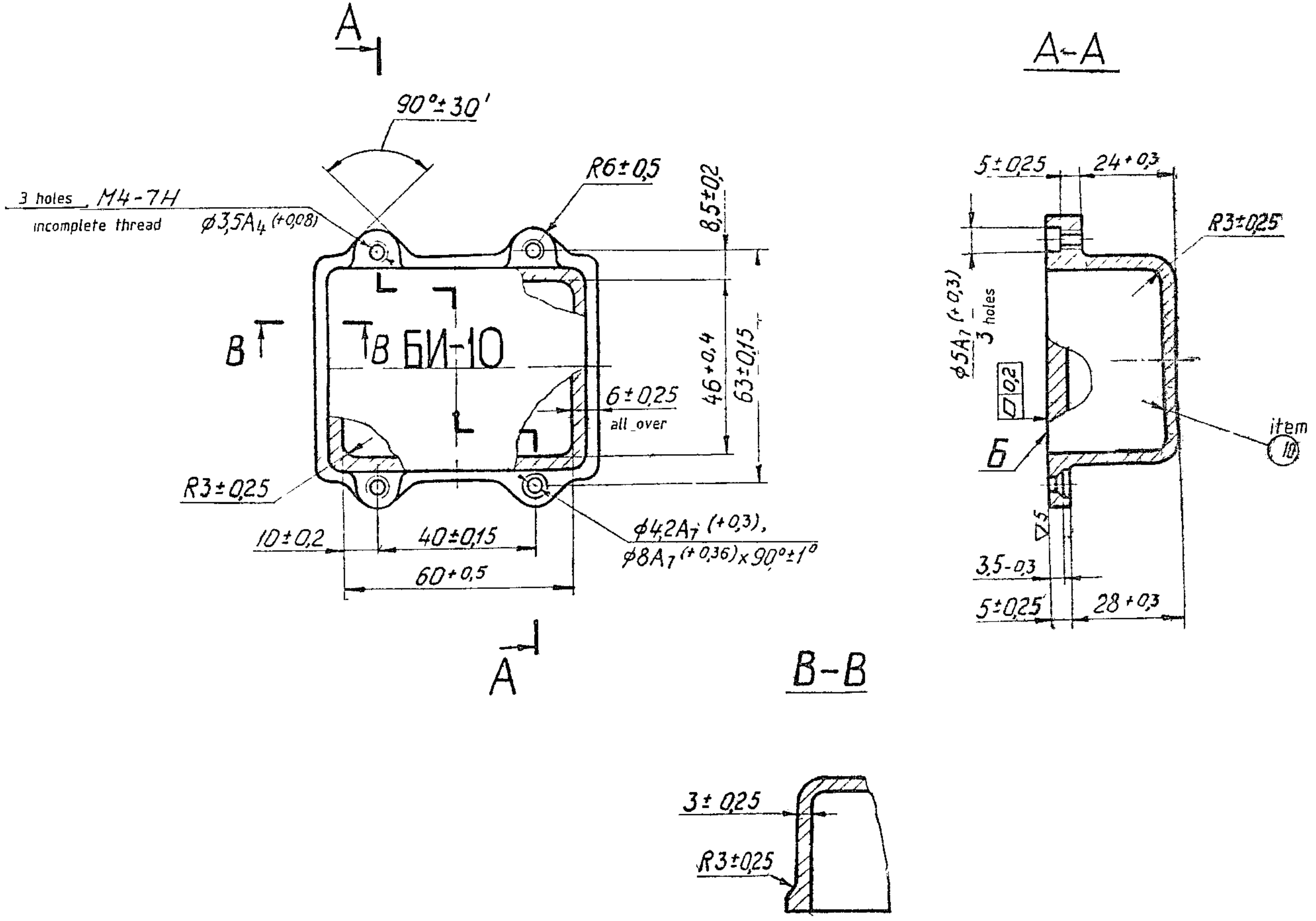

∇4(∇)

2 Unspecified casting radii are R1, max

3 Blunt burrs and sharp edges with R≈0.5mm

4 Provide pattern drafts for internal surface of 1° 30' towards increased body that for projection of upto 1°30' towards decreased body

5 Cavities on surface Б are not allowed

6 Impregnate with varnish ВЛ-725г ТУ6-10-866-75 in vaccum

8 Surface Б, internal surface and holes without are varnish coating, threaded holes are without coating

9. Mark inscription БИ-10 in casting type 10 as per НО 010 007, Projection of inscription over the plane is 0.7 to 1mm

10 Mark serial number of seat with type 3 as per НО 010 007 height of digit is 0.7 to 1mm,

11 Coating Chemically, oxidized, fluorinated/enamel МЛ-165, grey GOST 12034-77 III Ж1

12 Select paint and varnish coating in compliance with OST3-1928-73

13 It is allowed to use МЛ-12 grey GOST 9754-76 or enamel МЛ-165, silver GOST 12034-77 instead of enamel МЛ-165 grey GOST 12034-77.

86
I-615

PH10.016

SNO	SHT	DOC NO	SIGN	DATE
13	2	АЩЛ.167-81		
12	4	АЩЛ.1531-80		
11	4	АЩЛ.1563-86		

	NAME	SIGN	DATE
DRAWN	K. Yesudas		22.12.84
EDT/CHKD	B. Sarkar		
F/M, DC	S R Nair		18.1.85
DIV.OFFR	A.K. KUNDU		15.2.85

COVER

Casting 1OST3-4227-79
АЛ2Д GOST 1583-93

SHEET	WEIGHT	SCALE
	0,106	1:1

TOTAL SHEETS

ORDNANCE FACTORY PROJECT HYDERABAD

Перв. примен.

Справ. №

Подп. и дата

Инв. № дубл.

Взам. инв. №

Подп. и дата

Инв. № подл.

PH10017

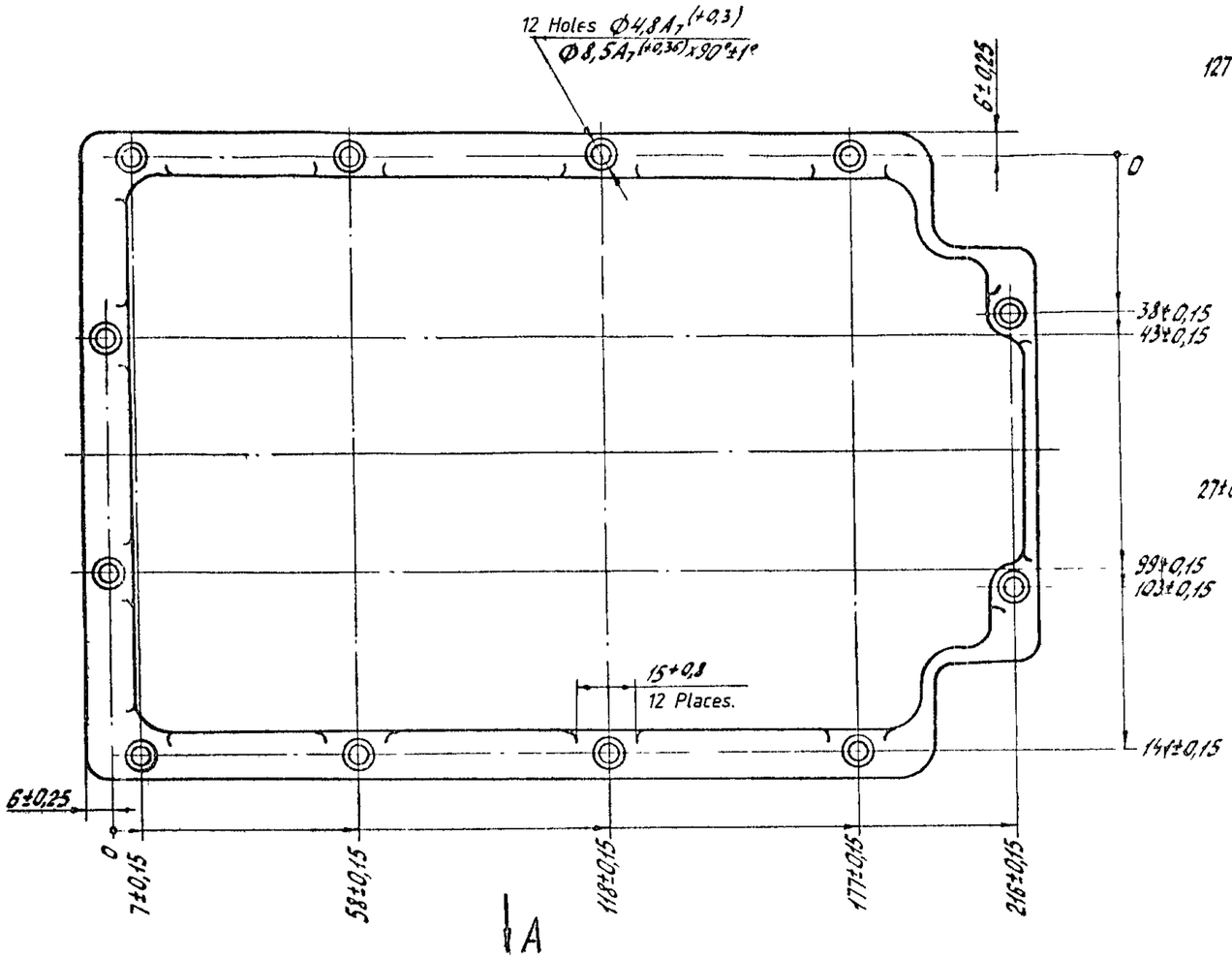

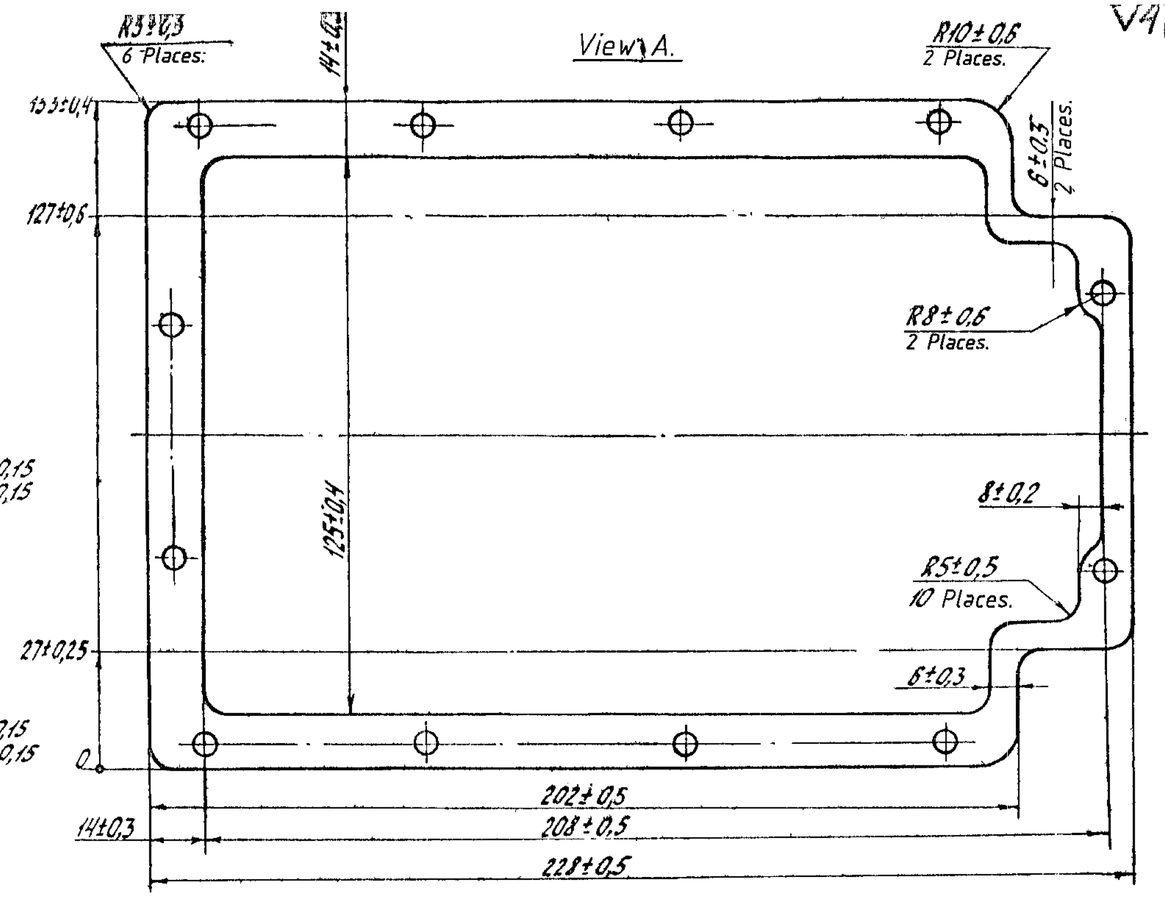

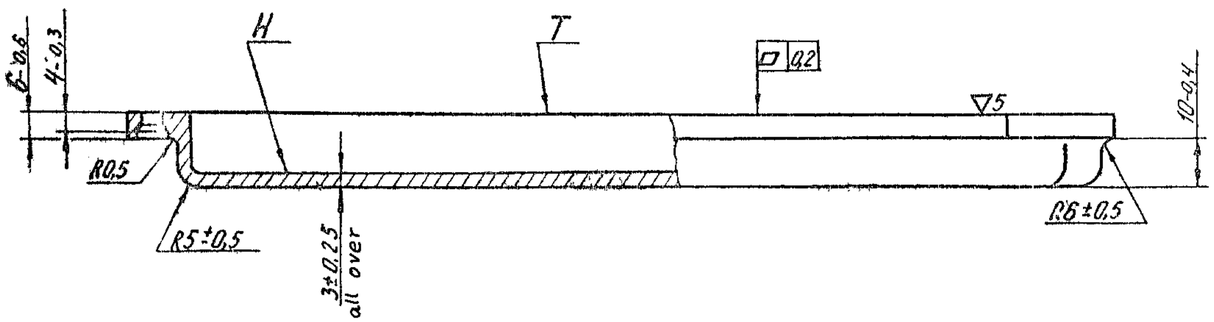

2. Unspecified casting radii are R3 , max.
3. Pattern drafts for internal surfaces are provided 1°30' towards decreased dimensions.
4. Cavities and traces from knock-out are not allowed on surface T.
5. Blunt sharp edges with chamfers or radious 0 5.
6. Impregnate in vacuum with varnish ВЛ-725Г TY6-10-866-75
8. Surface T without varnished coating.
9. Coat the internal surface with one layer of enamel МЛ-12 white , GOST 9754-76.
10. Technological grid, height of rib not exceeding 0.8mm is allowed on surface H.
11. Coating:-Chemically,oxidized, fluorated /enamel МЛ-165 grey, GOST 12034-77.Ш ЖК1 .
12. Select varnish coating in complience with OST3-1928-73.
13 It is allowed to use enamel МЛ-12,grey, GOST 9754-76 or enamel МЛ-165, silver, GOST 12034-77 instead of enamel МЛ-165, grey, GOST 12034-77 and enamel пФ-115, white GOST 6465-76 instead of enamel МЛ-12 white GOST 9754-76.

88
I-615

PH10017

SNO	SHT	DOC NO	SIGN	DATE	COVER	SHEET	WEIGHT	SCALE.
DRAWN		R.H PRASAD.		24.12.84.		6	0.32	1:1
EDT+CHKD		B. Samual				TOTAL SHEETS		
F/M, D.C.		S.R.NAIR.		18 1 85	Casting-I-OST 3-4227-79 АЛ2А, ГОСТ 2685-75.	ORDNANCE FACTORY PROJECT HYDERABAD		
DIV.OFFR		A.K.KUNDU		15.2.85				
		NAME	SIGN	DATE				

PH10.019

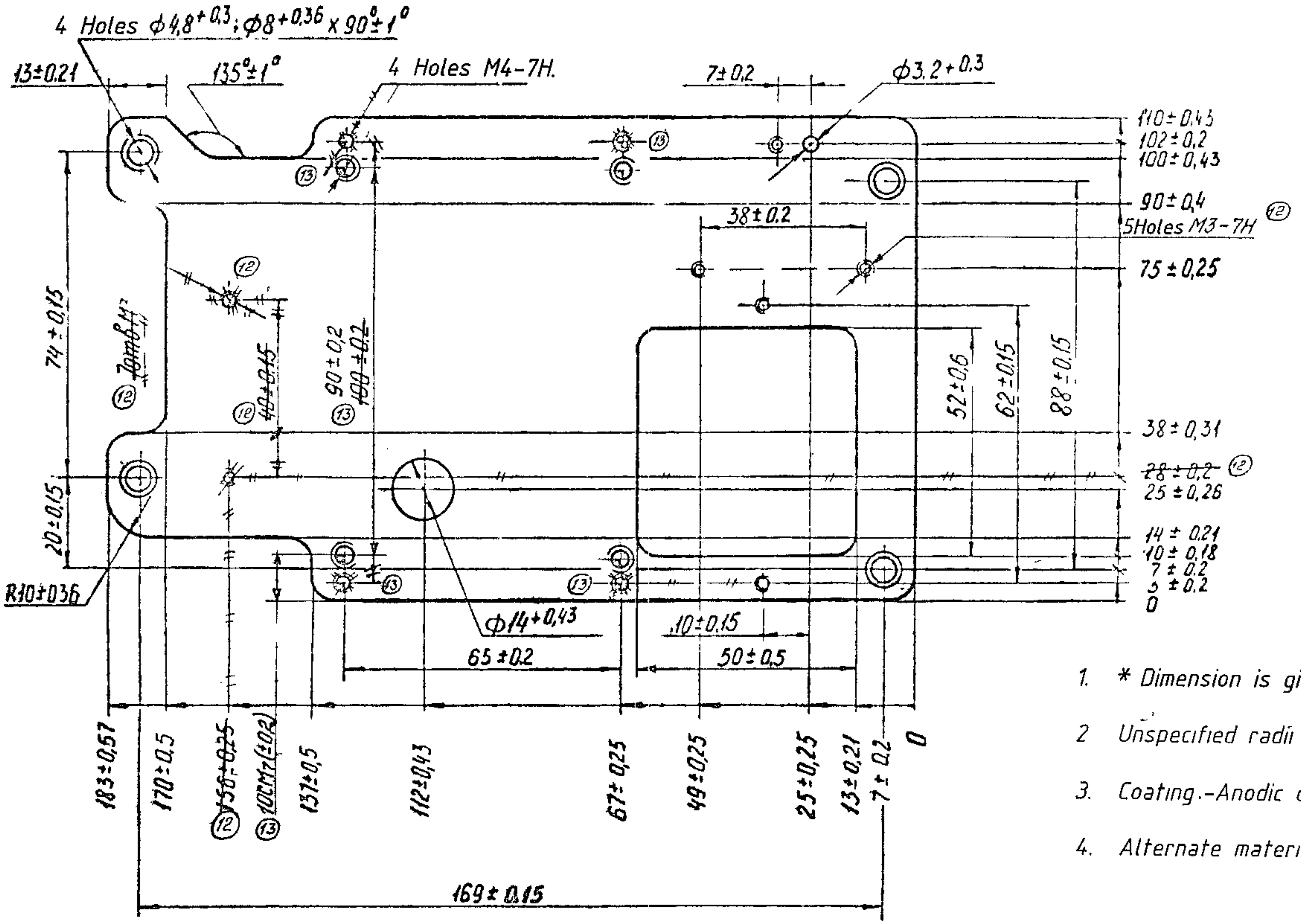

Rz80/(✓)

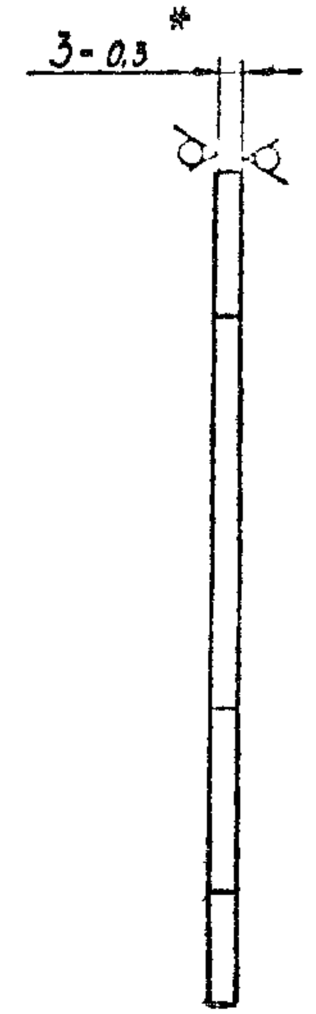

1. * Dimension is given for reference.
2. Unspecified radii are R $5^{\pm 0.4}$ mm.
3. Coating.-Anodic oxidation, chromatizing.
4. Alternate material is sheet Д16T-3 GOST 21631-76

89/I-615

PH10.019

SNO	SHT	DOC NO	SIGN	DATE
DRAWN		RHPRASAD.		24.12.84
EDT, CHKD		B. Samayal		
F/M, D.C.		SRNAIR		18.1.85
DIV.OFFR		A.K.KUNDU		15.2.85
		NAME	SIGN	DATE

CHASSIS.

SHEET	WEIGHT	SCALE
Б	0.114	1:1

Sheet Д16 AT - 3
ГОСТ 21631-76.

TOTAL SHEETS

ORDNANCE FACTORY PROJECT HYDERABAD

Перв. примен. PH10.019 · Справ. № · Подпись и дата · Инв. № дубл. 12427 · Взам. инв. № · Подпись и дата 6.3.78 · Инв. № подл. 25178

FORMAT	ZONE	REF. NO.	DESIGNATION.	DESCRIPTION.	QTY	REMARKS
				Technical papers		
22			PH10 020Cb	Assembly drawing		
				Assembly units		
1		1	PH10 010	Transistor	1	T1
11		3	P 1430	Board	1	
				Parts		
22		5	PH10 ,002	Body	1	
11		7	PH10 023	Post	1	
11		9	M11-40293	Washer	2	
11		11	8X-189	Washer	2	

28/I-615

(28 I-615)

PH 10 020

S NO	SHT	DOC NO	SIGN	DATE
DRAWN BY		PRASAD	Prasad	21 12 84
CHECKED		B. Sarkar	[signature]	24.12
F/M DC.		S R NAIR.	SR	18/1 85
DIV OFFR		A.K. KUNDU	AK.	15.2 85
		NAME.	SIGN.	DATE

MEASURING UNIT БИ-10

SHT.NO.	TO NO.OF.SHT
1	1

FORMAT	ZONE	REF NO.	DESIGNATION	DESCRIPTION.	Q.TY	REMARKS
				Standard items		
				Screws GOST1491-72		
		15		M2-6gx10 48 A 0016	4	X1-10763
		16		M3-6gx10 36 016	2	X1-10539
		17		M3-6gx25 36 016	2	X1-11299
		20		Nut M3 5A 016		
				GOST5927-70	2	X2-10598
		22		Washer 3 65Г 016		
				GOST6402-70	4	X-10581
				Other items		
		25		Two-pin plug PП10-11		
				ГЕ0 364 004TY	1	
		26		Resistor		
				СП5-3-1 Bm100 Ohm 10%		
				Ø 0 468 506 TY	1	R2
		27		Stabilizer diode Д814B		
				СМ3 362 012 TY	1	Д1

29 / I-615

29 I-615

S NO	SHT	DOC NO.	SIGN.	DATE
DRAWN BY		PRASAD	Prasad	21 12 8
CHECKED		R. Sumant	[signature]	24.12
F/M DC.		S.R NAIR.	[signature]	18 1 85
DIV.OFFR		A.K.KUNDU	AK.	15.2.85
		NAME.	SIGN.	DATE

PH 10 020

MEASURING UNIT БИ -10

SHT.NO.	TO NO.OF.SHT
2	4

FORMAT	ZONE	REF NO.	DESIGNATION	DESCRIPTION.	QTY	REMARKS
				Materials		
		30		Wire MM 0.5		
				GOST 2112-79	180	mm
		31		Sleeve ТЛВ 0.5		
				GOST 9614-75	80	mm
		32		Sleeve III-ТВ-40-230-2x0.4		
				2x0.4,white		
				GOST19034-73	20	mm.
		33		Thread 12-ply "extra		
				strong" glossy,grade 1,		
				GOST 6309-73	80	mm

30/I.615

30
I-615

PH 10.020

S NO	SHT	DOC NO.	SIGN	DATE
DRAWN BY		PRASAD	prasad	21 12 84
CHECKED		G.Samuel	[illegible]	22.12
F/M DC.		S R NAIR.	[illegible]	18185
DIV OFFR		A.K.KUNDU	A.K.	15.2.85
		NAME.	SIGN	DATE

MEASURING
UNIT БИ 10

SHT.NO.	TO NO OF SH
3	4

FORMAT	ZONE	REF. NO.	DESIGNATION	DESCRIPTION.	QTY	REMARKS

31/I-615

31
I-615

PH.10.020

S NO	SHT	DOC NO.	SIGN.	DATE
DRAWN BY		.		
CHECKED		B Sawant		14.12
F/M DC.		S R NAIR.		18188
DIV OFFR.				
		NAME.	SIGN.	DATE

MEASURING UNIT
БИ 10

SHT.NO.	TO NO.OF SH
4	4

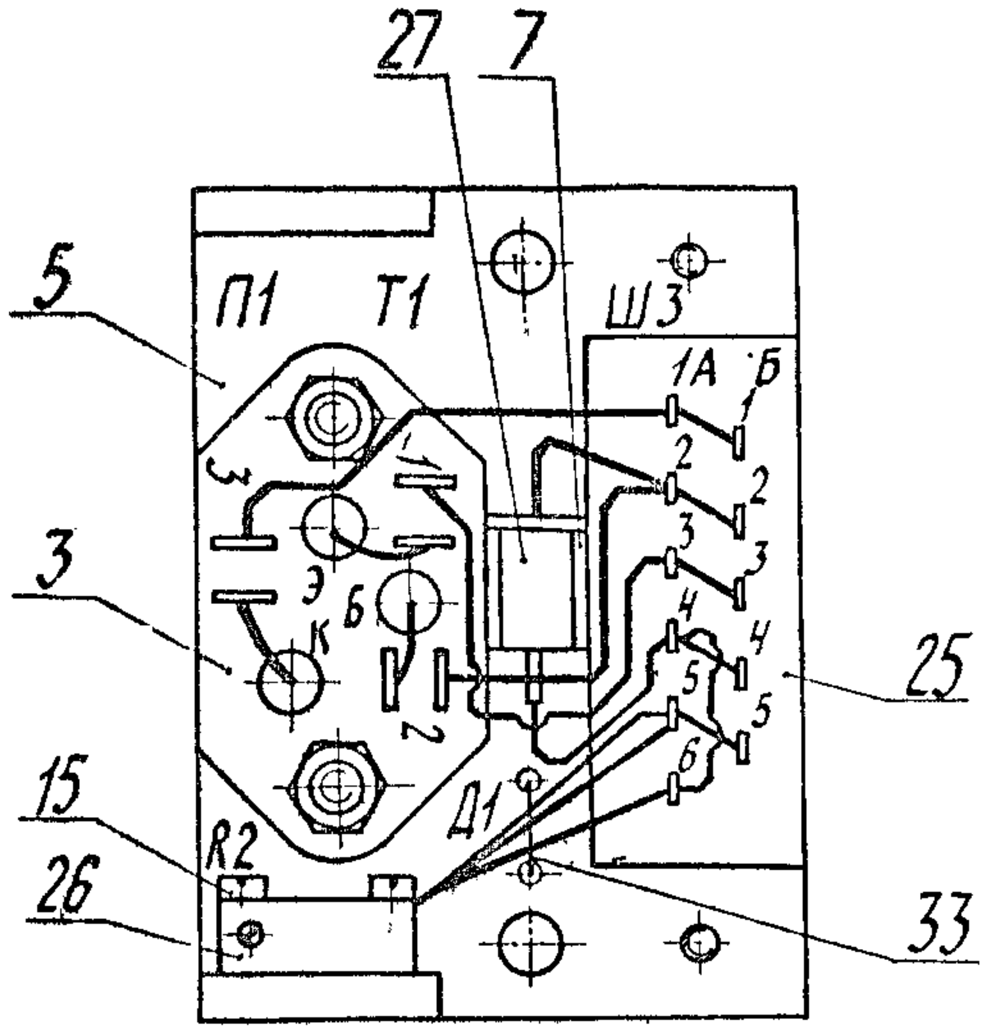

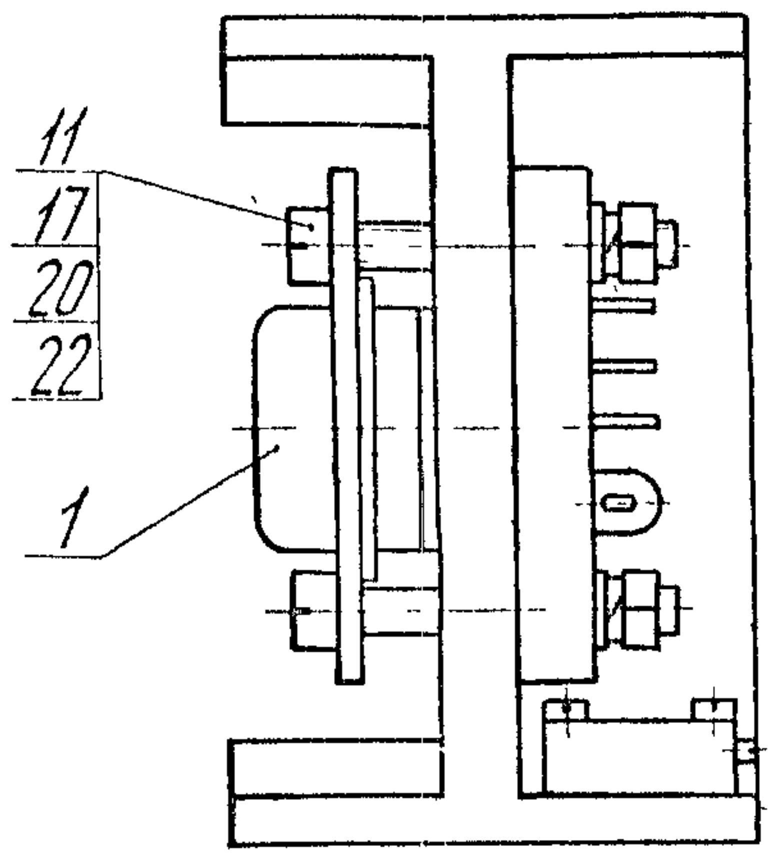

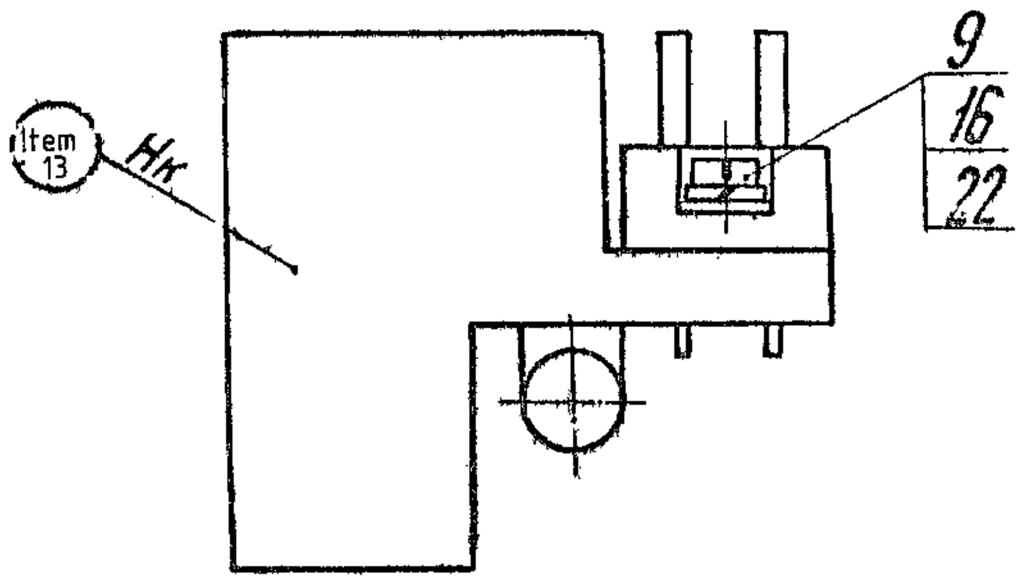

1 Jumpers are provided with wire,Ref No 30 with coating cadmium 3microns Put the sleeve,Ref No 31 on jumpers,

2 Carryout the soldering using solder ПОСК50-18 GOST21930-76 With flux ФКСп OST4 Г0 033 000

3 Secure the screws,Ref,No 15 with enamel XB-124 grey GOST 10144-74

4 Coat the fasteners with enamel XB-124,grey GOST 10144-74

5 Secure the stabilizer diode, Ref No 27 and post Ref No 7 with compound Э6-1С OST 10144-74

6 Coat the transistor, Ref No 1 with compound МБК-Г ТУ6-16-2228-77 as per instruction И-9-79

7 Put sleeve,Ref No 32 on lead of stabilizer diode,Ref No 27, running Ш 3,terminal 2A

8 Fasten the lead of resistor,Ref No 26 with thread,Ref No 33

9 Make the inscriptions with enamel MC-17, black ТУ6-10-1012-78, type 3 as per HO-010 007 IN places, where it is convenient for reading

10 Insulation between the collector of transistor,Ref No 1 and body Ref No 5 before and after potting with compound should withstand a voltage of 500 Volts 50Hz for 1Sec, without breakdown

11 In units,specified in SPTA set No 2, adjust resistor,Ref No 26 so that when the unit is changed in regulators PH-10, regulated voltage is in complaince with requirements PH 10 000TY.

12 Mark,type3 as per HO 010 007, with enamel MC-17,black, ТУ6-10-1012-78

13 Technical requirements for electric wiring are as per HO 010 001.

Table of connections

Conductor	Ref no	From	To	Length M	Remarks
1	30	T1: Э	П1 1	0 02	
1	30	T1 К	П 1 3	0 02	
3	30	T1:Б	П 1 2	0 02	
4		R2	Ш 3 5A		Resistor lead
5		R2	Ш 3 5A		Resistor lead
6	30	Ш 3 4 A	Ш 3 6A	0 015	
7		Ш 3 6A	R2		Resistor lead
8		Ш 3·4A	Д 1 "+"		Stabilizer diode lead
9	30	П 1:1	Ш 3 3A	0 03	
10	30	П 1.2	Ш 33 2A	0 03	
11	30	П 1:3	Ш 3 1A	0 03	
12		Д 1 "-"	Ш 3 2A		Stabilizer diode lead
13	30	Ш 3:1A	Ш 3 1Б	0 015	
14	30	Ш 3·2A	Ш 3 2Б	0 015	
15	30	Ш 3 3A	Ш 3 3Б	0 015	
16	30	Ш 3.4A	Ш 3 4Б	0 015	
17	30	Ш 3 5A	Ш 3 5Б	0 015	

32 I-615

ЕСКД

PH10.020 C6

MEASURING UNIT БИ -10 ASSY DRG.

SNo	SHT	DOC NO	SIGN	DATE
DRAWN		PRASAD	Prasad	21 12 8
EDT, CHKD		B.Saman		
F/M, DC		S R NAIR		18 1 85
DIV.OFFR		A.K.KUNDU		15 2 85
		NAME	SIGN	DATE

SHEET	WEIGHT	SCALE
	0,1	2:1
		TOTAL SHEETS

ORDNANCE FACTORY PROJECT HYDERABAD

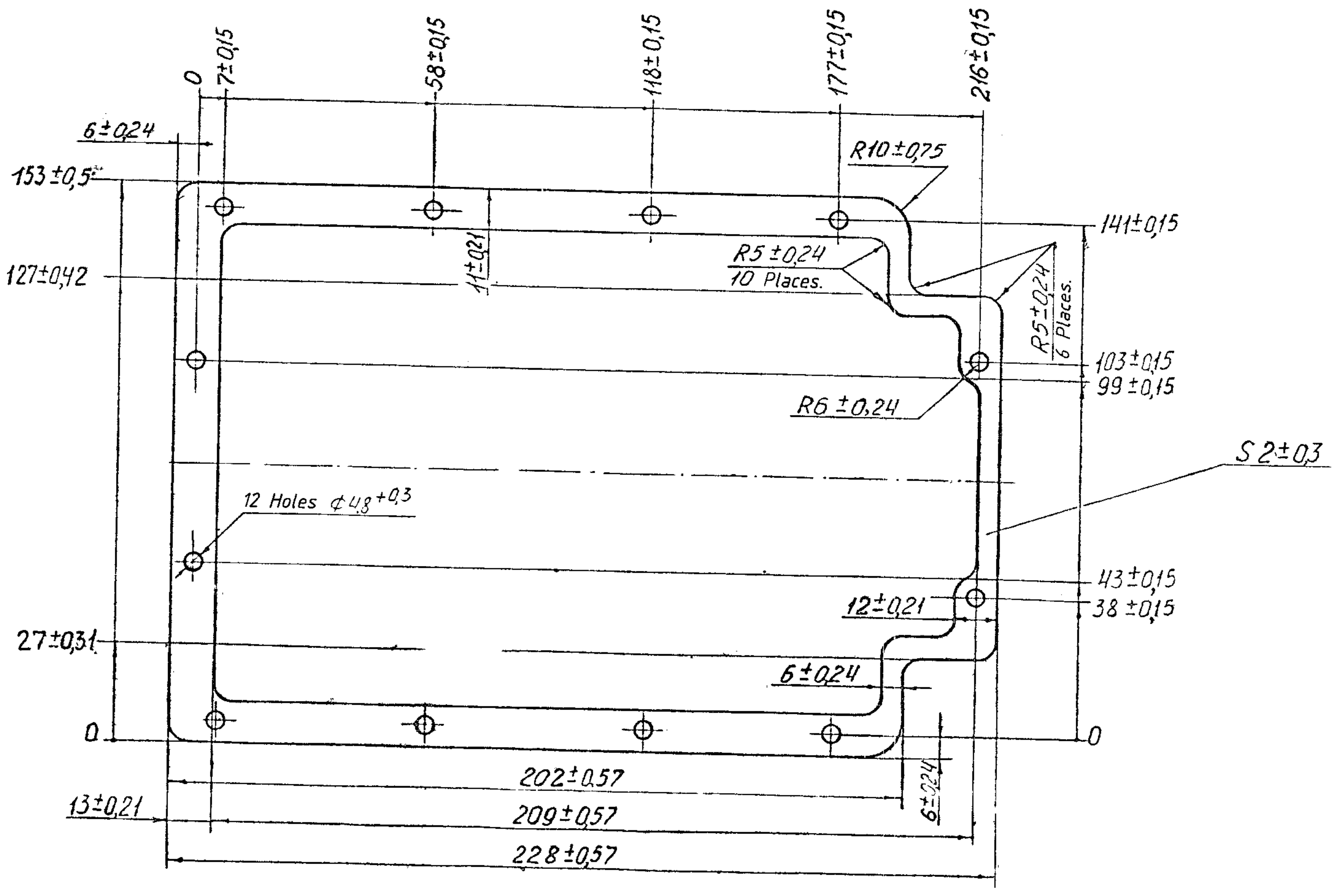

1 Alternate material is $\frac{\text{Sheet 254311-2}}{\text{Rubber 4326-1}}$ TY 005 216-75 TY 005 216-75.

2. It is allowed to use sheet TY 38 005 838-70.

3 Dimensions are provided with tool.

4 Other Technical requirements to the part are as per TY 005 216-75

90 I-615

ECKD

PH10.022

SNO	SHT	DOC NO	SIGN	DATE				
DRAWN		RHPRASAD.		24.12.84	GASKET	SHEET	WEIGHT	SCALE
EDT/CHKD		B. Samuel				Б	0.017	1:1
F/M, DC.		SRNAIR		18.1.85	Rubber 98 - I TY 005 216-75	TOTAL SHEETS		
DIV.OFFR		A.K.KUNDU		15.2.85		ORDNANCE FACTORY PROJECT HYDERABAD		
		NAME	SIGN	DATE				

Перв. примен. PH10.000

Инв. № подл. 25650 | Подпись и дата 13XI.78 | Взамен инв. № 12430 | Инв. № дубл.

2,5/

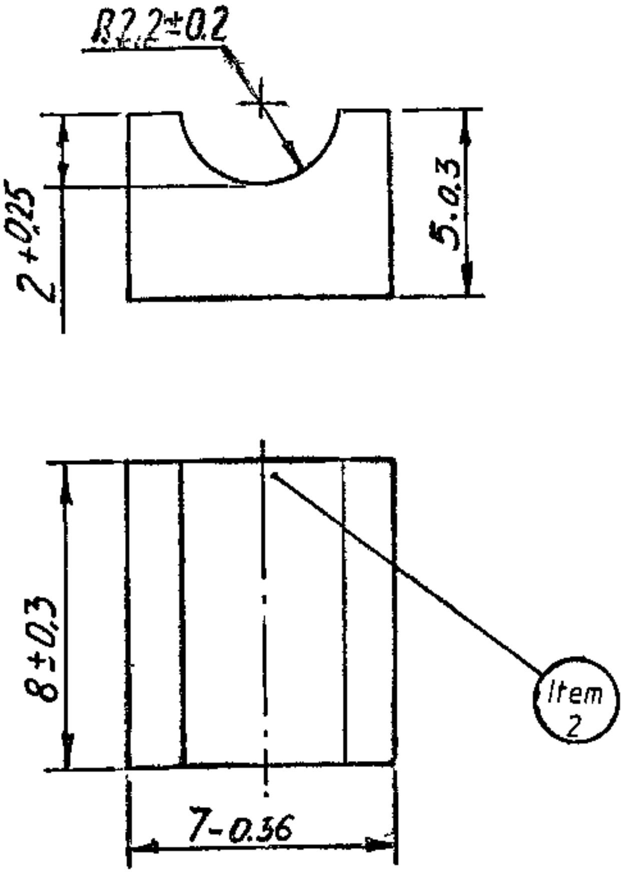

91 / I.615

1 Drafts are upto 2° towards decreased dimensions

2 Mark the serial number of seat by casting with type 2 as per HO 010 007

3 Other requirements are as per OST B 84-1602-78

4 Alternate material is ACB-4-P-2M, grade 0 GOST 17478-72

91 / I-615

ECKД

7 | 1 | AШЛ2426 ¼-81 | 282

PH10.023

SNO	SHT	DOC NO	SIGN	DATE
DRAWN		N Yesudas	[signature]	22 12 84
EDT&CHKD		B. Saxena	[signature]	24.12
F. H, DC		S R Nair	[signature]	18 1 85
D. I. OFFR		A.K. KUNDU	[signature]	15.2.85
		NAME	SIGN	DATE

POST

MOULDING MATERIL AГ-4B GOST 20437 75

SHEET	WEIGHT	SCALE
Б	0,0004	5:1

TOTAL SHEETS

ORDNANCE FACTORY PROJECT HYDERABAD

PH10. 025

∇3(∇)

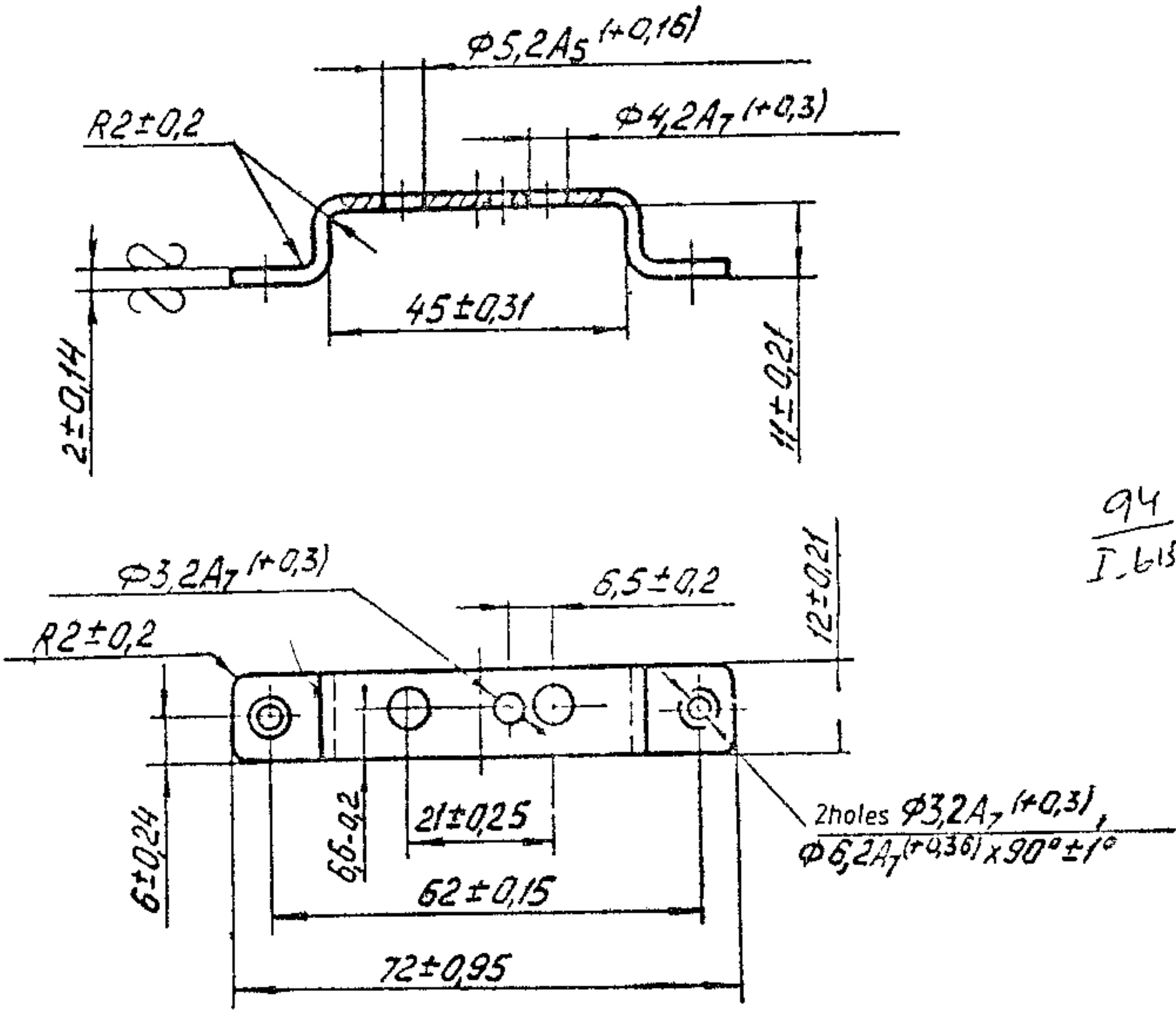

94 / I-615

1 Coating Zinc-plated, 6 microns thick, chromatizing. composition of solution for chromatizing is as per И-252-78

2. Alternate material sheet $\frac{\text{Б2 GOST 19904-74}}{\text{II ВГ 08Kn GOST 9045-70}}$

94 / I-615

Восстановлено с подлинника верно.

PH10.025

SNO	SHT	DOC NO	SIGN	DATE
DRAWN		N Yesudas	[signature]	22 12 86
EDT, CHKD		B. Saxena	[signature]	31-[illegible]
F/M, DC		S.R.Nar	[signature]	18 1 85
DIV.OFFR		A.K.KUNDU	[signature]	15.2.85
		NAME	SIGN	DATE

ANGLE PIECE

Sheet $\frac{\text{Б2 GOST 19904-74}}{\text{4-II-10 GOST16523-70}}$

SHEET	WEIGHT	SCALE
	5,0016	1:1

TOTAL SHEETS

ORDNANCE FACTORY PROJECT HYDERABAD

RH10.026

▽2(▽)

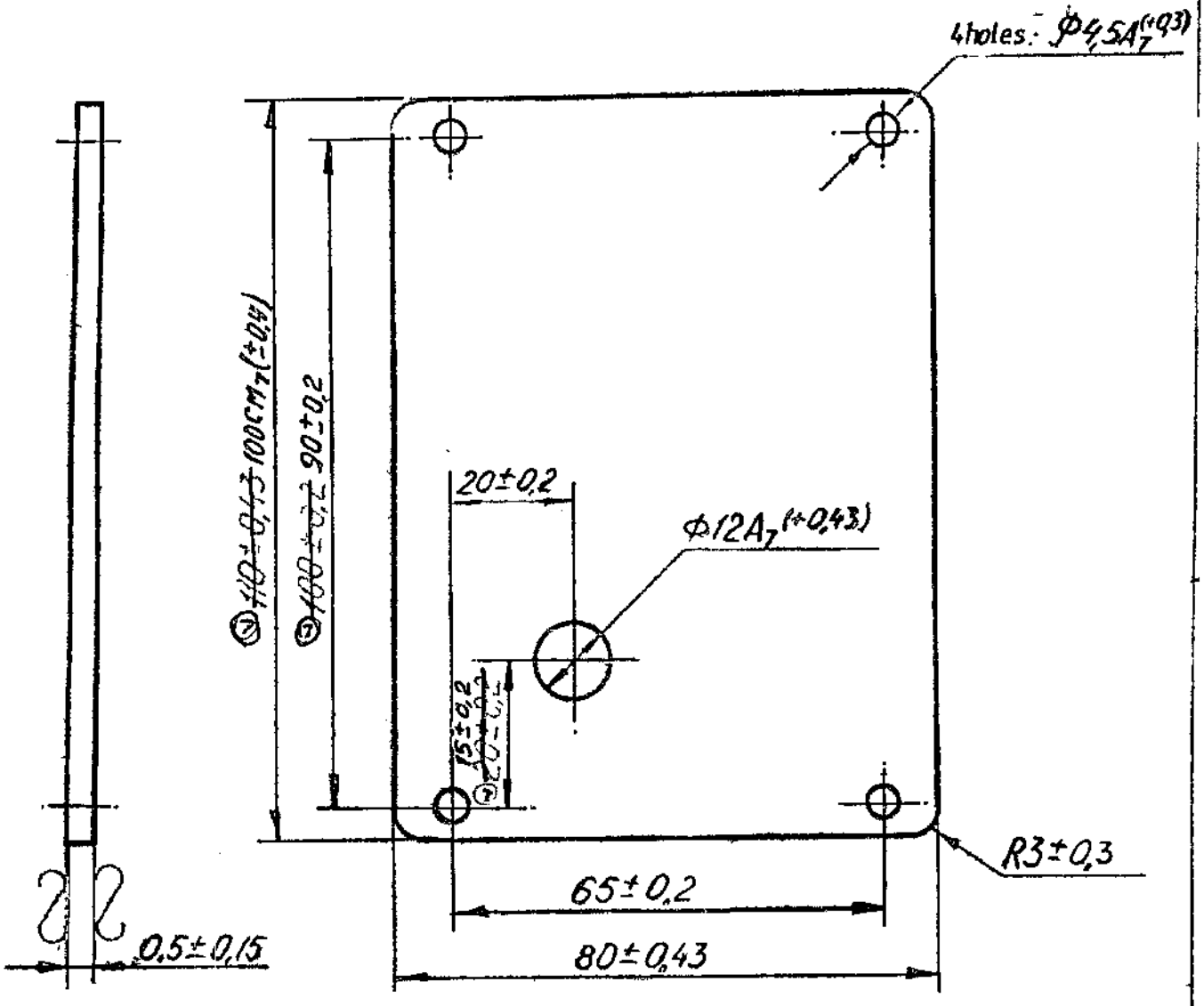

1. Dimensions are given for tool.
2. Coating: Varnish ГФ-95 GOST 8018-70 .It is allowed to use varnish МЛ-92, GOST 15865-70.

95
I-615

RH10.026

SNO	SHT	DOC NO	SIGN	DATE
DRAWN		N Yesudas		22 12 84
EDT CHKD		B. Samuel		
F/M, D.C.		S R.Nair		18 1 85
DIV.OFFR		A.K.KUNDU		15.2.85
		NAME	SIGN	DATE

GASKET

Glass textolite CT-1-0 5
GOST 12652-74

SHEET	WEIGHT	SCALE
	TOTAL SHEETS	

ORDNANCE FACTORY PROJECT HYDERABAD

2,5

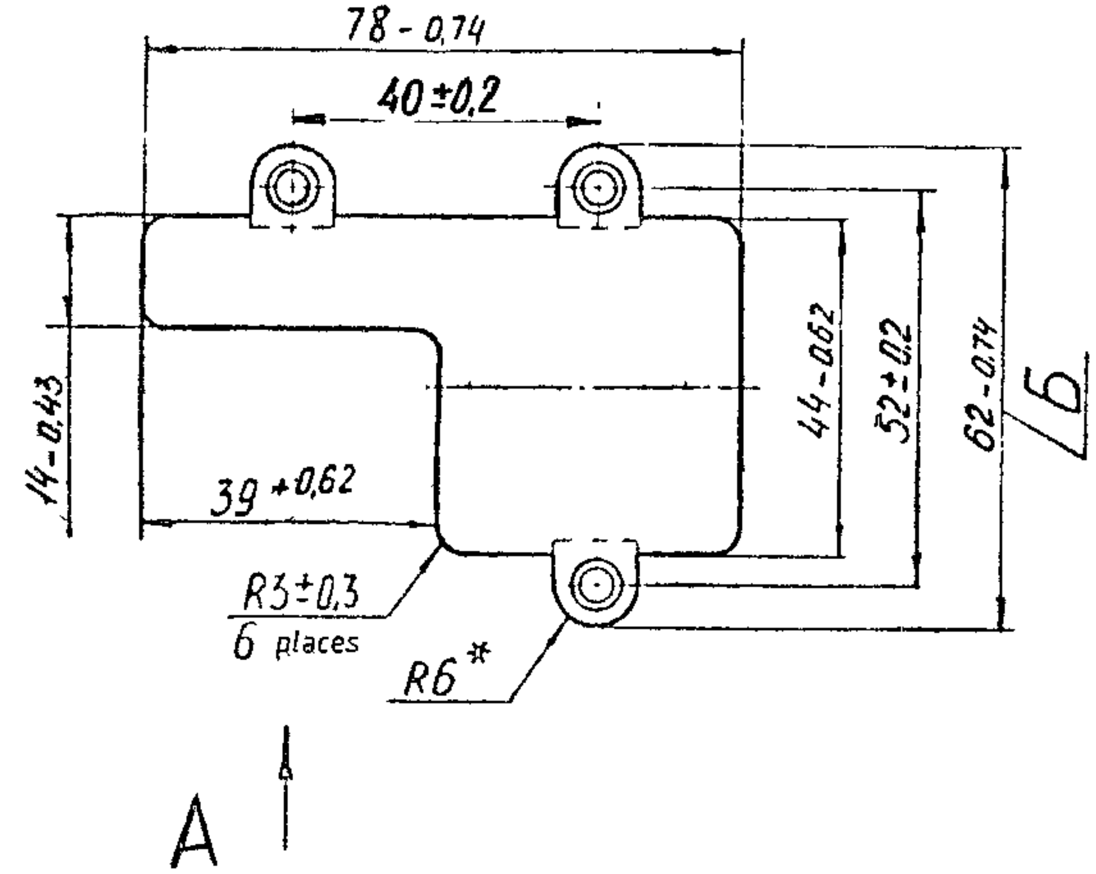

VIEW A

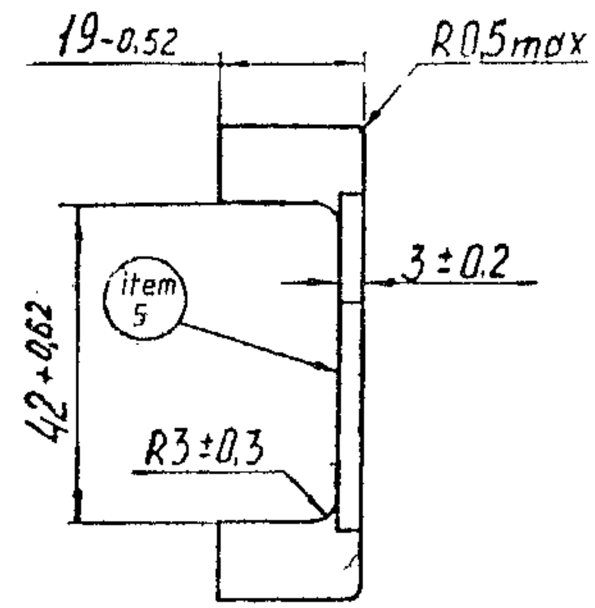

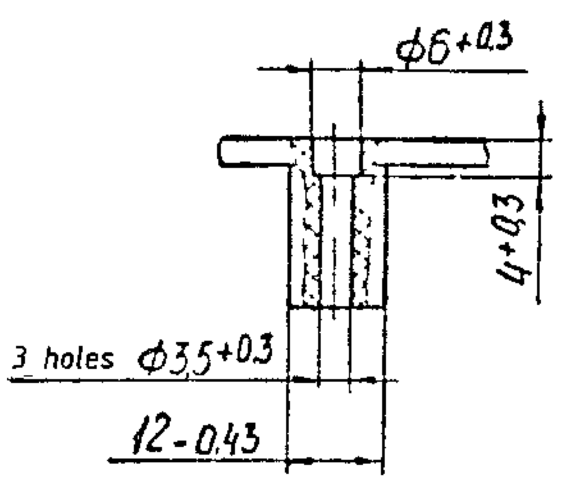

1. Alternate material is ДСВ-2-Р-2М grade 0, ДСВ-4-Р-2М grade 0 GOST 17478-72.
2. *Dimension is provided with tool.
3. Drafts are upto 3° towards increased dimensions, those for holes are upto 1° towards increased dimensions.
4. On dimension Б drafts are upto 3° towards decreased dimension.
5. Mark serial No. of seat of mould with type 2 as per НО.010.007.
6. Other requirements are as per OST B 84-1602-78.

96 / I-615

96 / I.615

SNO	SHT	DOC NO	SIGN	DATE
DRAWN		N Yesudas		22 12 84
EDT,CHKD		B. Saxena		
F/M,DC.		S R Na		18 1 85
DIV.OFFR		A.K.KUNDU	A.K.	15 2 85
		NAME	SIGN	DATE

PH10.027

CASING

Moulding material АГ-4В GOST 20437-75

SHEET	WEIGHT	SCALE
Б	0,024	1:1

TOTAL SHEETS

ORDNANCE FACTORY PROJECT HYDERABAD

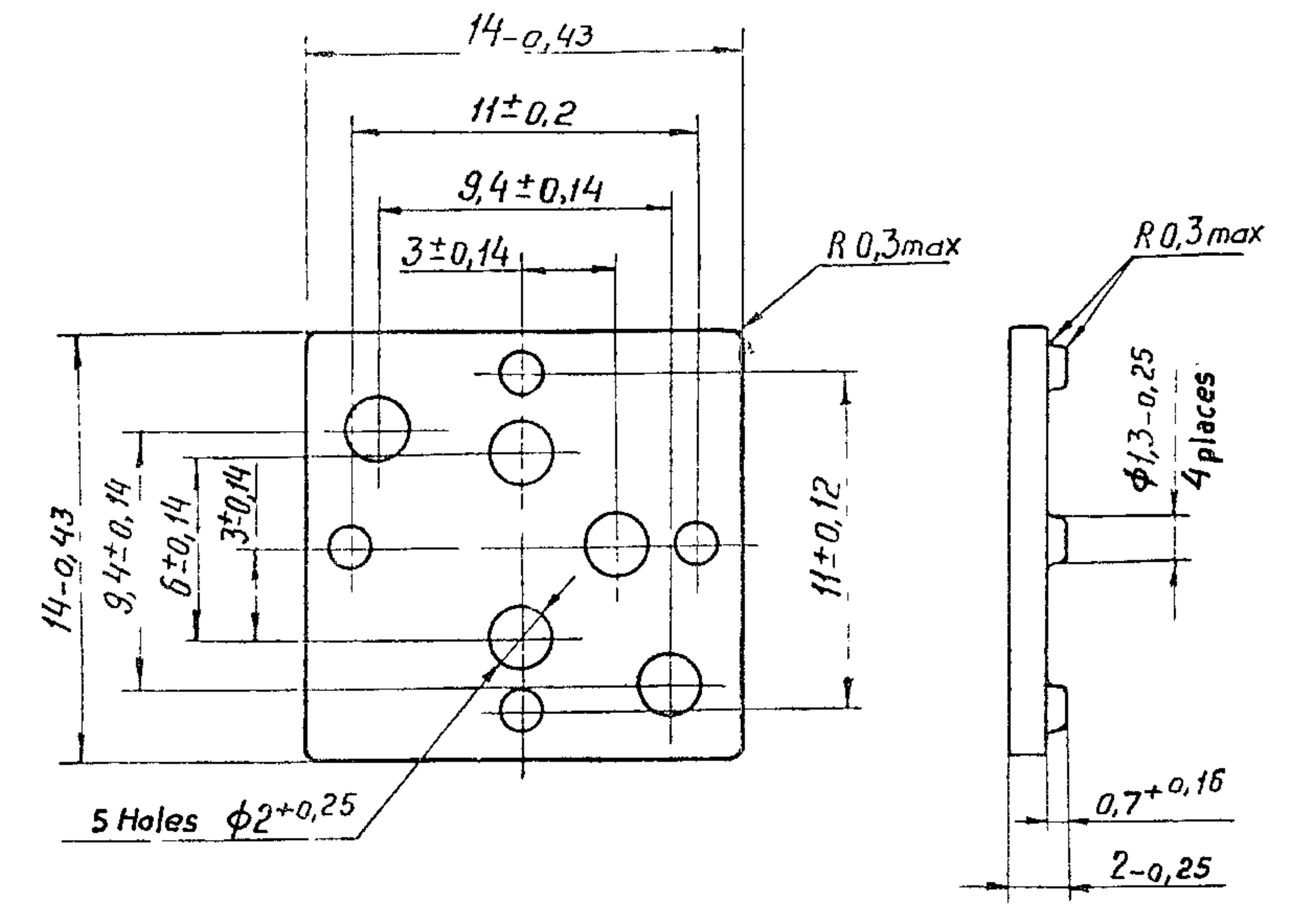

1. Technological drafts upto 10° towards increased dimensions are allowed.
2. Other requirements are as per OST B 84-1602-78.
3. Alternate material is polyathylene 18103-035 grade 1, 11803-070, grade 1, GOST 16337-77.

PH10.029

SNO	SHT	DOC NO	SIGN	DATE
DRAWN		N Yesunas		
EDT, CHKD		B. Samuel		
F/M, DC		S.R. Nair		18.1.85
DIV. OFFR		A.K. Kunhi		15.2
		NAME	SIGN	DATE

GASKET

Polyathylene 15803-020, grade 1, GOST 16337-77

SHEET	WEIGHT	SCALE
Б	0,0002	5:1

TOTAL SHEETS

ORDNANCE FACTORY PROJECT HYDERABAD

ЕСКД

97 I-615

Восстановлен с подлинника

19761 Дать 11.12.75 12435

PH-10

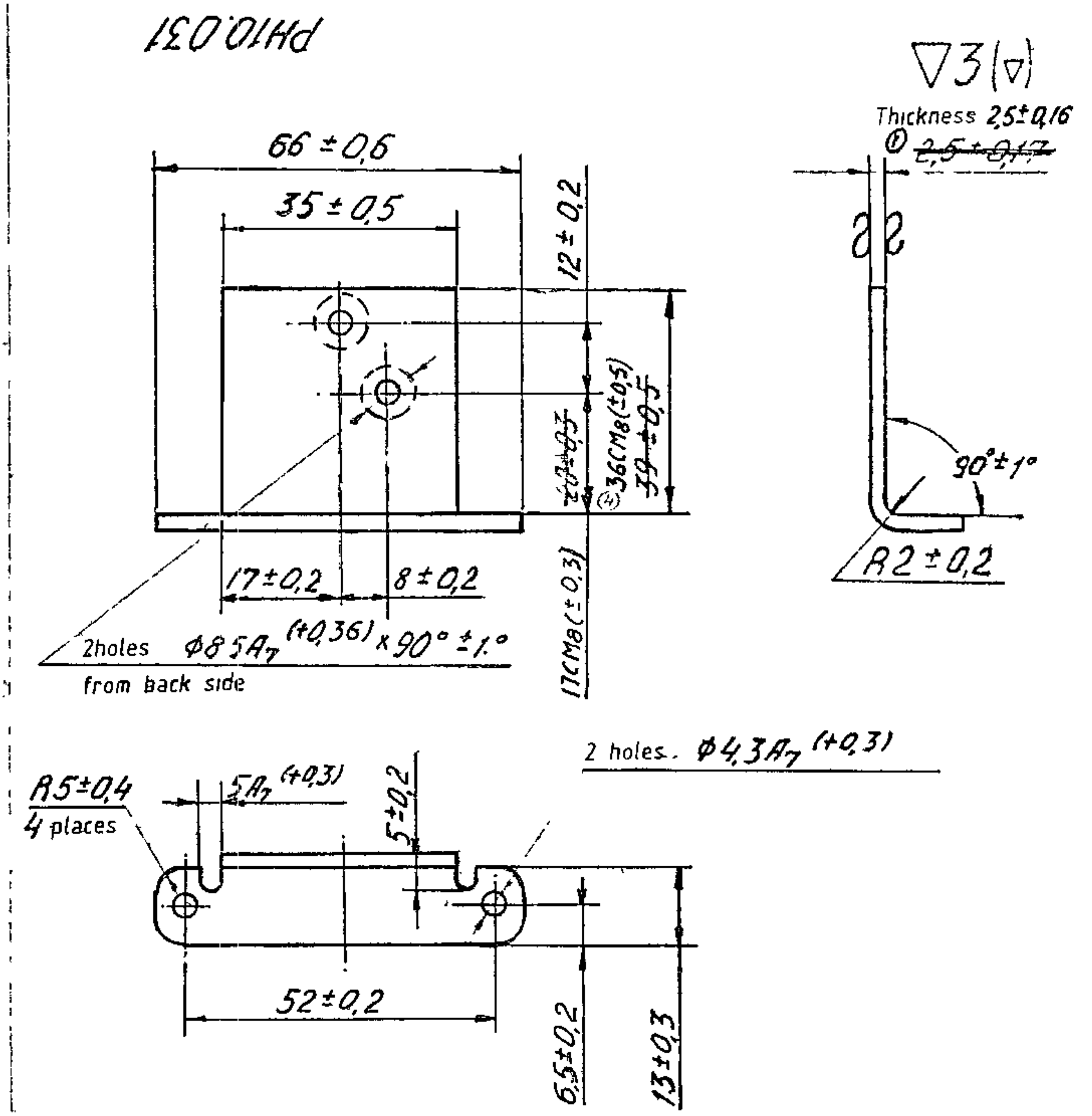

1. Coating: Zinc-plated, 6 microns thick, chromatizing, composition of solution for chromatizing is as per И-252-78
2. Alternate material is sheet $\frac{\text{Б 2.5 GOST 19904-74}}{\text{II Br 08Kn GOST 9045-70}}$

98 / I-615

PH10.031

SNO	SHT	DOC NO	SIGN	DATE		SHEET	WEIGHT	SCALE
DRAWN		N Pesudas	[signature]	22.12.84	ANGLE PIECE		0,044	1:1
EDT, CHKD		B. Samuel	[signature]					TOTAL SHEETS
F/M, DC.		S R Na..	[signature]	18.1.85	Sheet $\frac{\text{52.5 GOST 19904-74}}{\text{4-II-10 GOST 16523-70}}$	ORDNANCE FACTORY PROJECT HYDERABAD		
DIV.OFFR		A.K.KUNDU	[signature]	15.2.85				
		NAME	SIGN	DATE				

PH10.033

Rz80 √(√)

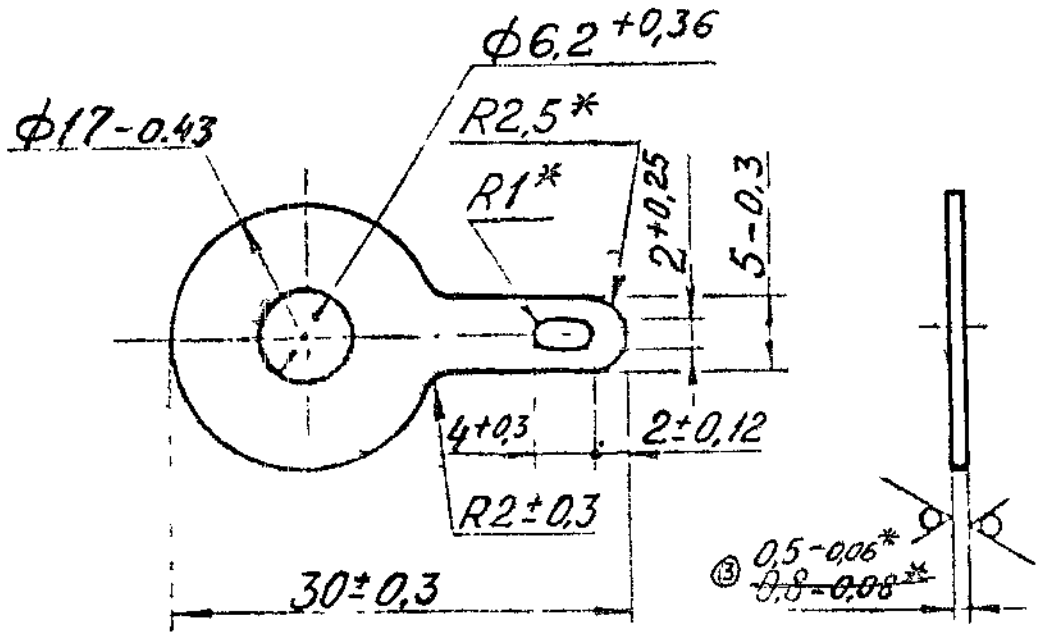

1. Altenate material is band AnPHM0.5 Л63 GOST 2208-75.
2. *Dimensions are given for reference.
3. Coating: Tin-bismuth, 9 microns.

99
I-615

PH10.033

SNO	SHT	DOC NO	SIGN	DATE
DRAWN		N Yesudas		22 12 86
EDT, CHKD		B. Samuel		31 12
F/M, D.C.		S R Nair		18 1 86
DIV.OFFR		A.K.KUNDU		15 2 86
		NAME	SIGN	DATE

LUG

Sheet ДnPM 05 Л63
GOST 931-78

SHEET	WEIGHT	SCALE.
	1,9	2:1
	TOTAL SHEETS	

ORDNANCE FACTORY
PROJECT
HYDERABAD

Rz80 √(√)

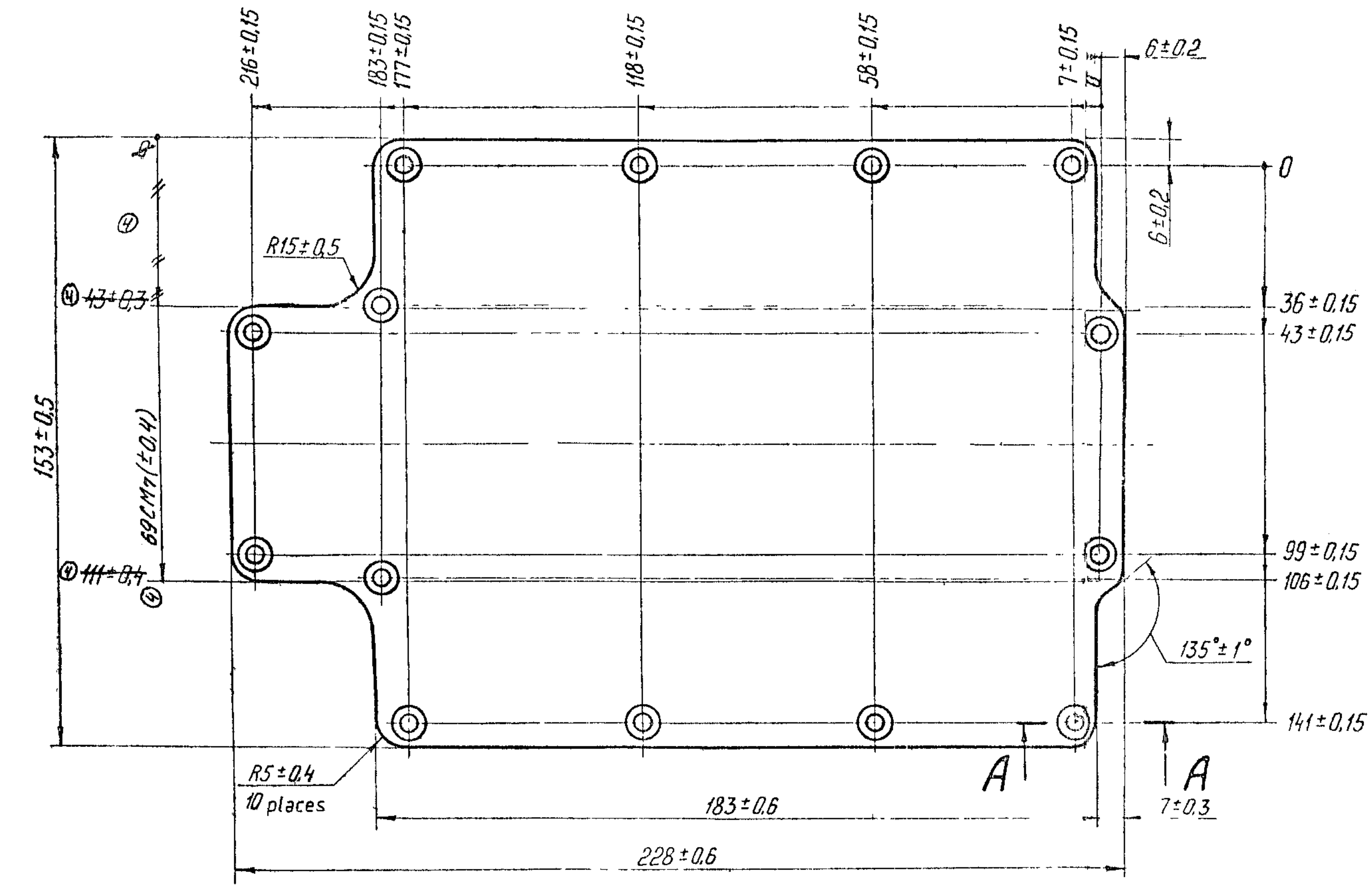

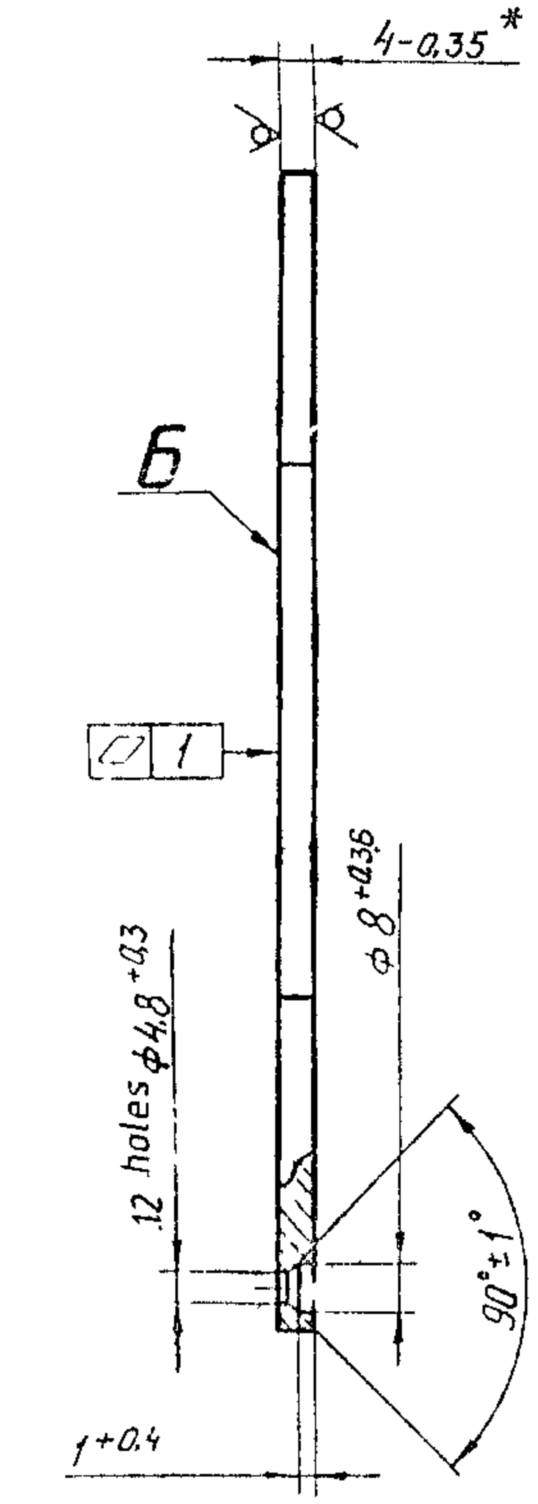

A-A

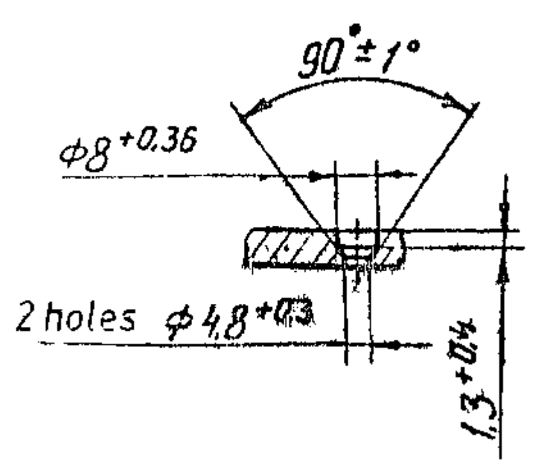

1. *Dimension is given for reference.
2. Micks and tool marks on surface Б at a distance 15mm from edge are not allowed, on the other part of surface Б tool marks to a depth not exceeding 0.5mm are allowed.
3. Coating: Anodic oxidation chromatizing/enamel МЛ-165 grey GOST 12034-77 III ЖI
4. Surface Б is without varnish coating.
5. Select varnish coating in compliance with OST3-1928-73.
6. It is allowed to use enamel МЛ-12 grey GOST 9754-76 or enamel МЛ-165 silver GOST 12034-77 instead of enamel МЛ-165 grey GOST 12034-77.
7. Alternate material is sheet Д16Т-4 GOST 21631-76

100 / I-615

PH10.034

5-1	Мил.862 1/4-81				
SNO SHT	DOC NO	SIGN	DATE	COVER	SHEET: Б · WEIGHT: 0.33 · SCALE: 1:1
DRAWN	N Yesudas	[signature]	22.12.81		
EDT/CHKD	Б. Saxena	[signature]	31.12.		TOTAL SHEETS
F/M, DC.	S R Vali	[signature]	18.1.85	Sheet Д16АТ-4 GOST 21631-76	ORDNANCE FACTORY PROJECT HYDERABAD
DIV.OFFR	A.K.KUNDU	[signature]	15.2.85		
	NAME	SIGN	DATE		

PH10.035

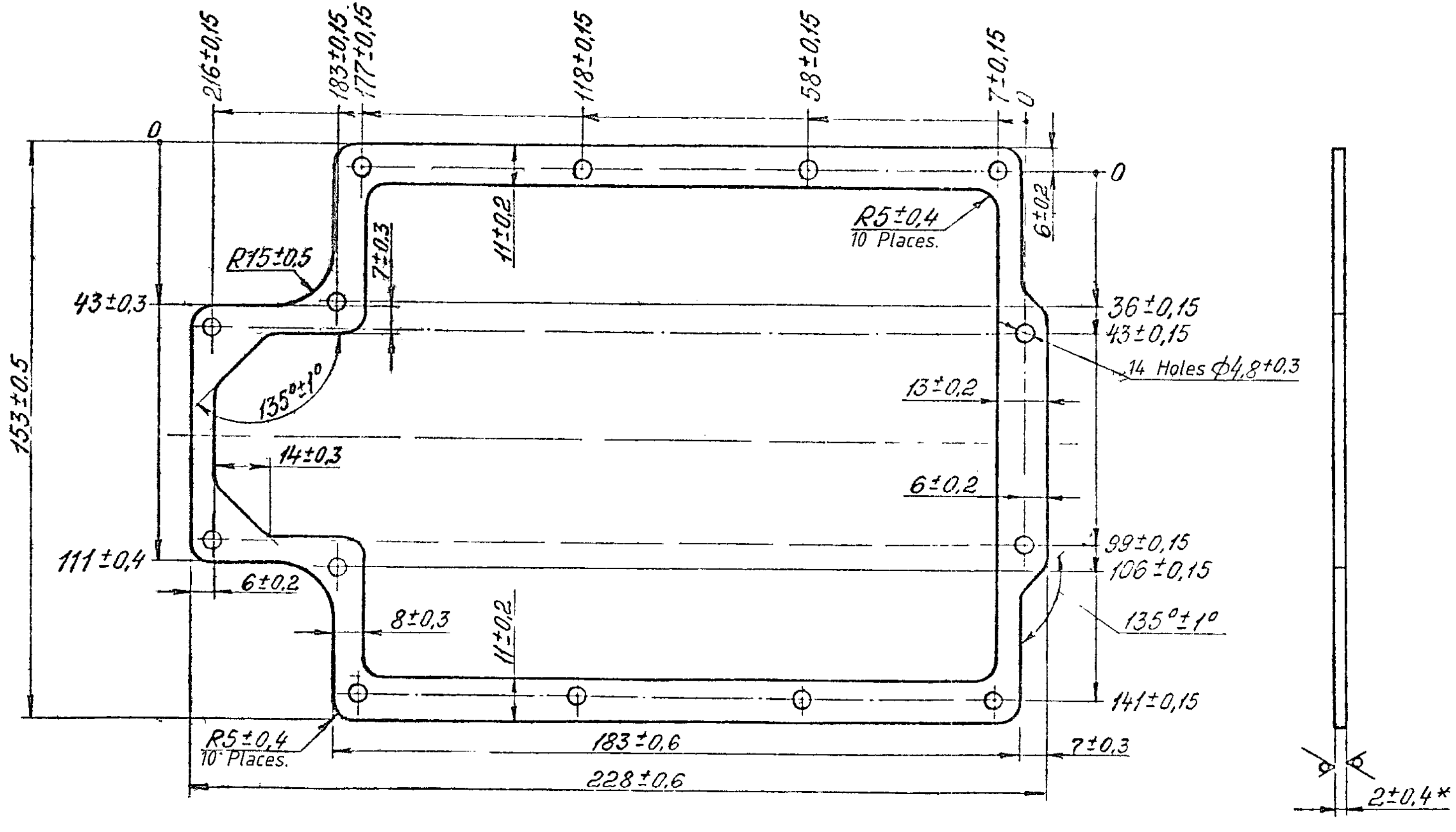

1. Alternate material is sheet as per TY38 005 838-70. It is allowed to manufacture from rubber 98-1, gasket is as per TY 005 216-75
2. * Dimension is given for reference, other dimensions are provided by tools which are checked not less than once quarterly.
3. Mark Y on the tag to batch
4. Other Technical requirements are as per TY005 216-75.

101
I-615

ECKD

PH10.035

SNO	SHT	DOC NO	SIGN	DATE		SHEET	WEIGHT	SCALE.
DRAWN		R H PRASAD.		22 12 84	GASKET	6	0.016	1:1
EDT, CHKD		D K JAIN		29 12 84		TOTAL SHEETS		
F/M, DC		S R NAIR		18 1 85	Sheet 254311-2 / Rubber 4326-1 TY005216-75.	ORDNANCE FACTORY PROJECT HYDERABAD		
DIV.OFFR		A.K.KUNDU		15.2.85				
		NAME	SIGN	DATE				

PH10 036

Rz160/(√)

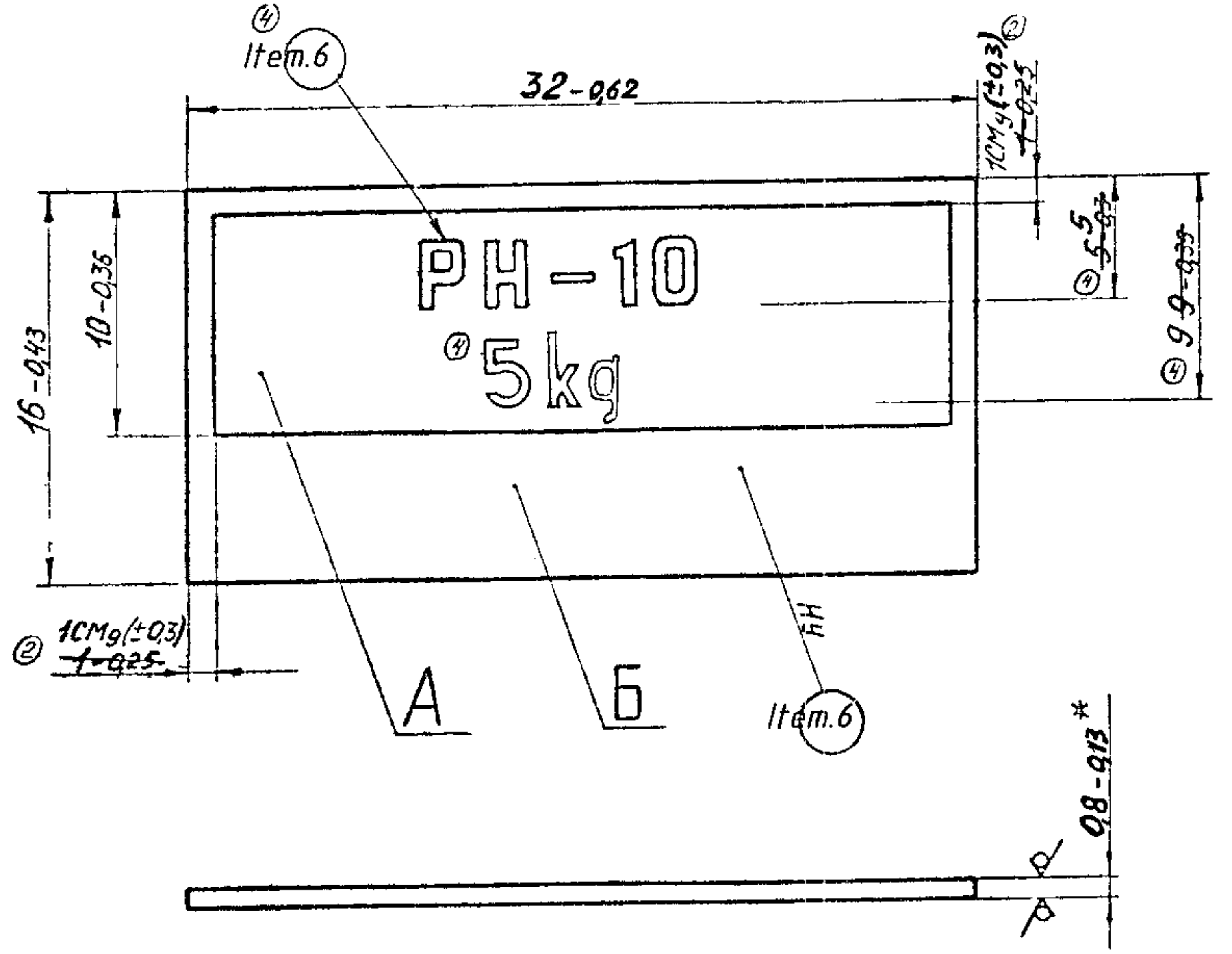

1. * Dimension is given for reference.
2. Make the plate by photochemical method.
3. Surface A should have with uniform painting. Colour of painting is from black to blue Surfaces not free of photograph and inscriptions should have colour of metal.
4. Coat the surface A and Б after applying serial number with varnish AK-113 TY-6-10-1296-75.
6. Mark with type 3 as per H0.010.007.
7. Fill serial number with enamel MC-17 , black , TY 6-10-1012-78.

102 / I-615

PH10.036

SNO.SHT	DOC NO	SIGN	DATE
DRAWN	R H PRASAD		22.12.84
EDT.CHKD	D K JAIN		29.12
F/M, DC	S R NAIR		19.1.85
DIV.OFFR	A.K.KUNDU		15.2.85
	NAME	SIGN	DATE

PLATE

Sheet Д1АТ - 0.8
ГОСТ 21631-76.

SHEET	WEIGHT	SCALE
6	1,1/12	4:1

TOTAL SHEETS

ORDNANCE FACTORY PROJECT HYDERABAD

26477

PH10.037

Rz80 (√)

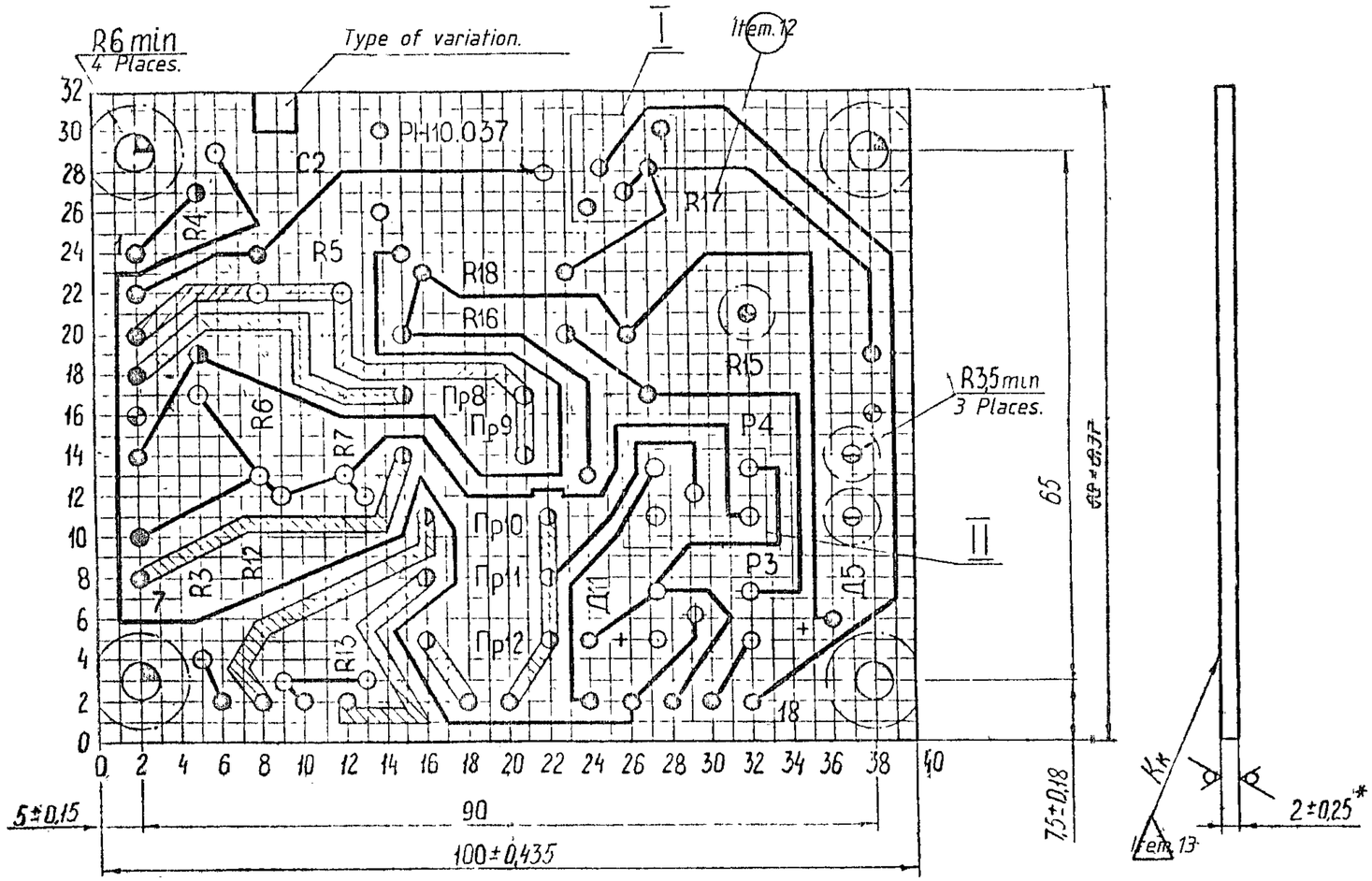

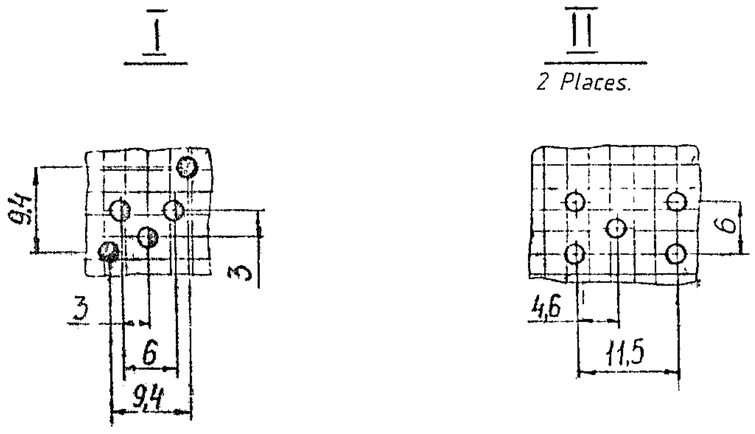

Designation of hole.	Diameter of hole mm.	Diameter of contour sinking in mm	Presence of bonding.	Qty.
●	1.0 +0.12	$12^{+0.2}$x70° min.	Available	32
⊕	1.3 +0.12	$15^{+0.2}$x70° min.	Available	22
◐	1.8 +0.12	$2.0^{+0.2}$x70° min.	Available.	17
◐	2.2 +0.12	———	Not available.	2
⊕	2.8 +0.12	———	Not available.	2
●	3.2 +0.30	———	Not available.	1
◐	4.5 +0.30	———	Not available.	4

1. Make the board by combination negative method.
2. * Dimension is given for reference.
3. Board should correspond to OST 4.077.000.
4. Grid coordinate pitch is 2.5 mm
5. Provide the shape of conductors as per the coordinate grid with deviation of ±15 mm from the drawing.
6. Places shown by dash-dot line are not to be occupied by conductors.
7. Width of conductor in tight places is not less than 0.3mm.
8. Width of cross-hatched conductors is not less than 2mm.
9. Distance between the conductors and terminal strips in tight places is not less than 0.5mm.
10. Profile of contact strip is arbitrary Undersized terminal strip of upto 0.15mm from the edge of counter sinking.
11. Limit deviations of the centre to centre distance of holes is ±0.2
12. Mark with type 2.5 as per H 0.010.007.
13. Stamp.

103
I-615

ECKД

PH10.037

SNO	SHT	DOC NO	SIGN	DATE
DRAWN		R.H.PRASAD		22.12.84.
EDT,CHKD		D K JAIN		19.12.84
F/M,DC.		S.R.NAIR.		18.1.85
DIV.OFFR		A.K.KUNDU		15.2.85
		NAME	SIGN	DATE

BOARD.

Glass textolite CФ-1-50-2
ГОСТ 10316-78.

SHEET	WEIGHT	SCALE.
Б	31gms.	2:1

TOTAL SHEETS

ORDNANCE FACTORY PROJECT HYDERABAD

FORMAT	ZONE	REF NO.	DESIGNATION.	DESCRIPTION.	QTY	REMARKS
				Technical papers		
			PH10.040СБ	Assembly drawing		
				Parts		
		1	БР15.012	Board	1	
		3	КТ6.007	Board	1	
		5	X6-11236	Rivet	10	
				Other items		
		7		Contact jaw		
				ГК1Н0.774.500	10	
		9		Lug		
				КС7.750.006-3		
				НГ0.775.000 ТУ	8	
		10		Fuse		
				ПЦ-30-2		
				АГ0.481.501 ТУ	1	

33/I-615

33
I-615

S NO	SHT	DOC.NO.	SIGN.	DATE
DRAWN BY		PRASAD	Prasad	21 12 84
CHECKED		B. Samuel	[illegible]	[illegible]
F/M DC.		S R NAIR.	[illegible]	18185
DIV.OFFR.		A K KUNDU	[illegible]	15.2.85
		NAME.	SIGN.	DATE

PH 10.040

BOARD

SHT.NO.	TO NO.OF.SH
1	2

FORMAT	ZONE	REF NO.	DESIGNATION	DESCRIPTION	QTY	REMARKS
				Fuses		
				TY16-522001-76		
		12		СП-10 30В	3	
		13		СП-15 30В	1	
				Materials		
		15		Wire MM-0 93		
				GOST 2112-71	10mm	Cadmium-3

34/I-615

34
I-615

PH 10 040

S NO	SHT	DOC NO.	SIGN.	DATE
DRAWN BY		PRASAD	Prasad	21 12 84
CHECKED		B. Sreenivas		
F/M DC.		S.R NAIR.		18 1 85
DIV OFFR.		A K KUNDU		15 2.85
		NAME.	SIGN	DATE

BOARD

SHT.NO.	TO.NO.OF.SHT
2	2

РН 10.040СБ

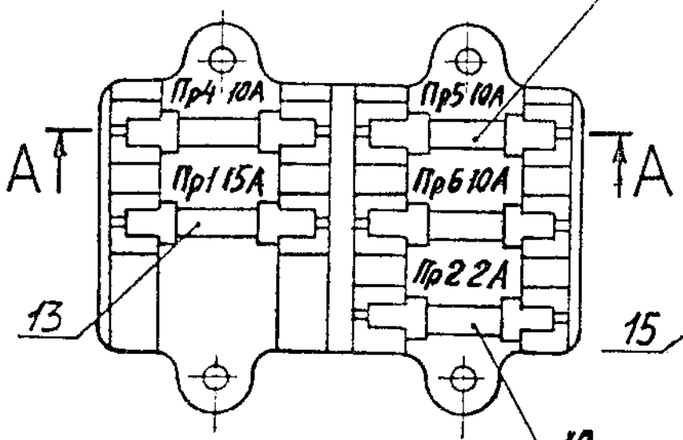

Rear view

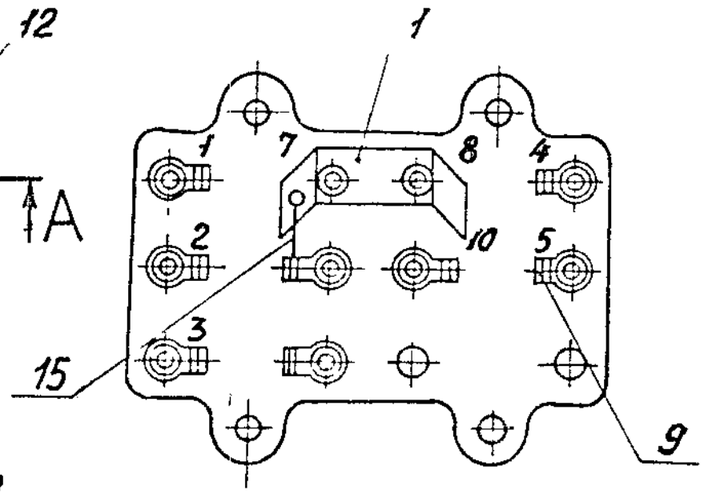

1, Solder with ПОССу40-2 GOST21930-76 flux ФКСп OST4Г 0.033.000

2 Wipe the jaws, Ref.No.9 and fuses with ethyl alcohol GOST17299-78 before installing the fuses, Ref No s 10, 12, 13.

3. For providing contact it is allowed to bend jaws, Ref.No.9.

4 Provide inscription with enamel МС-17, black, ТУ6-10-1012-78 type 3 as per НО 010.007 in places where it is convenient for reading.

А–А
М2:1

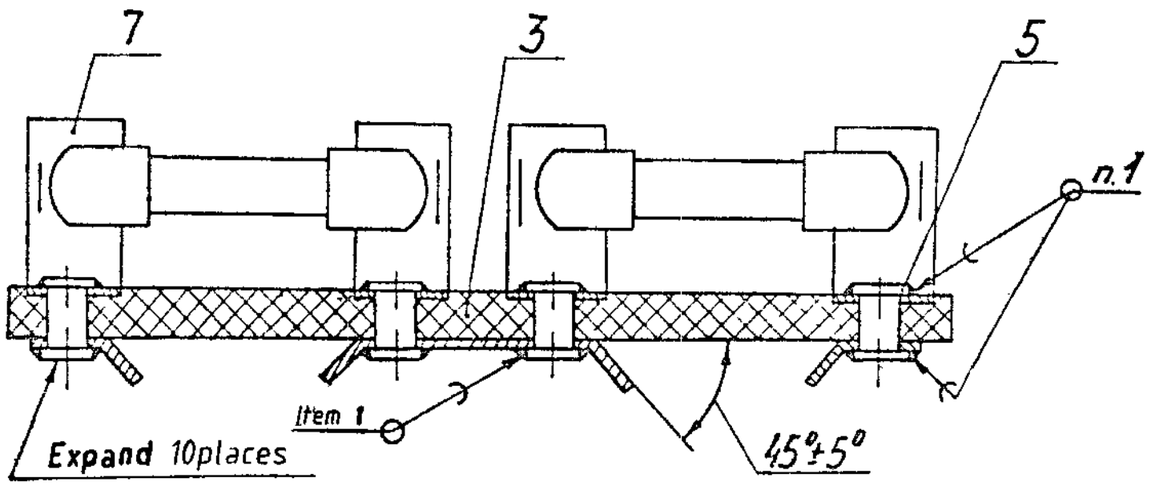

35
I-615

ЕСКД

РН 10.040СБ

SNO	SHT	DOC NO	SIGN	DATE
DRAWN		PRASAD		22 12 84
EDT&CHKD		B. Soma		24.1.85
F/M, D.C.		S R NAIR		18/85
DIV.OFFR		A K KUNDU		15.2.85
		NAME	SIGN	DATE

.BOARD
ASSEMBLY DRAWING

SHEET	WEIGHT	SCALE
6	0,1	1:1

TOTAL SHEETS

ORDNANCE FACTORY
PROJECT
HYDERABAD

Восстановлен с подлинника

28335	подп. 301.80	12437

Копировал Формат 12

FORMAT	ZONE	REF NO.	DESIGNATION	DESCRIPTION.	QTY	REMARKS
				Technical papers		
11		1	PH10 060CB	Assembl drawing		
				Parts		
11		1	PH10 ,014	Board	1	
11		3	X6-11236	Rivet	2	
				Other items		
		5		Lug KC7 750 006-3		
				HГ 0 775 000TY	2	KC7 7500063
		6		Contact jaw		
				ГK1 HO 774.500	2	
				PH10.060		
				~~PH10 060~~ PARTS		
11		7	M11-40293	Washer	2	

36/I.615

36
I-615

PH10.060

S NO	SHT	DOC NO	SIGN.	DATE
DRAWN BY		PRASAD	Prasad	22 12 84
CHECKED		B. Sreekumar		
F/M DC.		S R NAIR		15 1 85
DIV.OFFR.		A.K.KUNJU		15.2.85
		NAME.	SIGN.	DATE

BOARD

SHT.NO.	TO.NO.OF.SHT

PH10.060 СБ

PH10 060

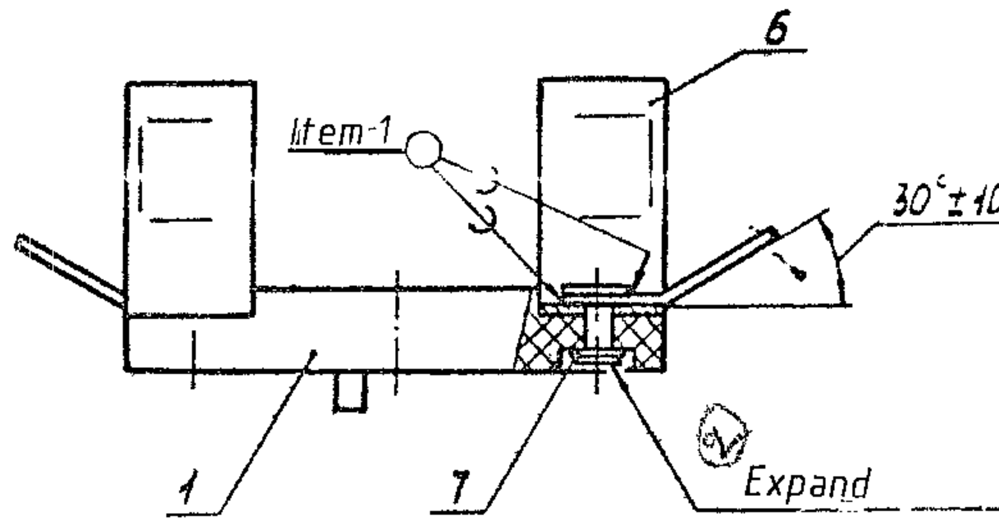

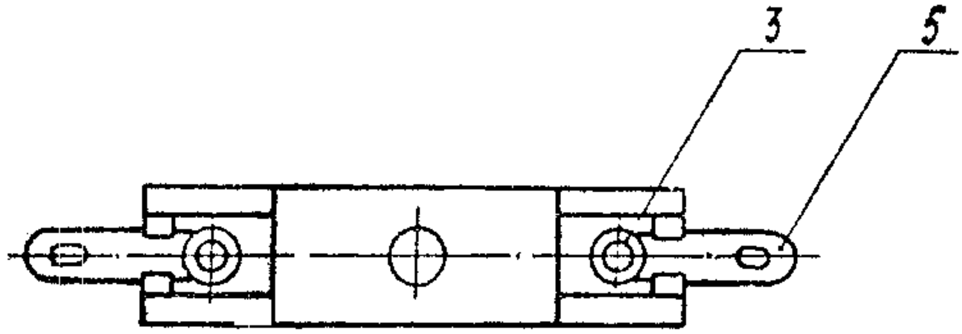

Designation	Coating of soldered joints
PH10 060	———

1 Solder the rivet, Ref No 3 to the parts, Ref No 5 and 6 with solder ПОССу 40-2 GOST21930-76 with flux ОСТ4Г0.033.000

2 For providing contact it is allowed to bend jaws, Ref.No.6.

37 / I-615

сстановлен с подлинника.

PH10.060 СБ

SNO	SHT	DOC NO	SIGN	DATE
DRAWN		PRASAD	Prasad	21 12 84
EDT & CHKD		B. Schmal	[illegible]	26.12
F/M, DC.		S R NAIR	[illegible]	18 1 85
DIV.OFFR		A.K.KUNHU	[illegible]	15.2 85
		NAME	SIGN	DATE

BOARD

ASSEMBLY DRAWING

SHEET	WEIGHT	SCALE
Б	5,8g	2:1

TOTAL SHEETS

ORDNANCE FACTORY PROJECT HYDERABAD

PH10.070

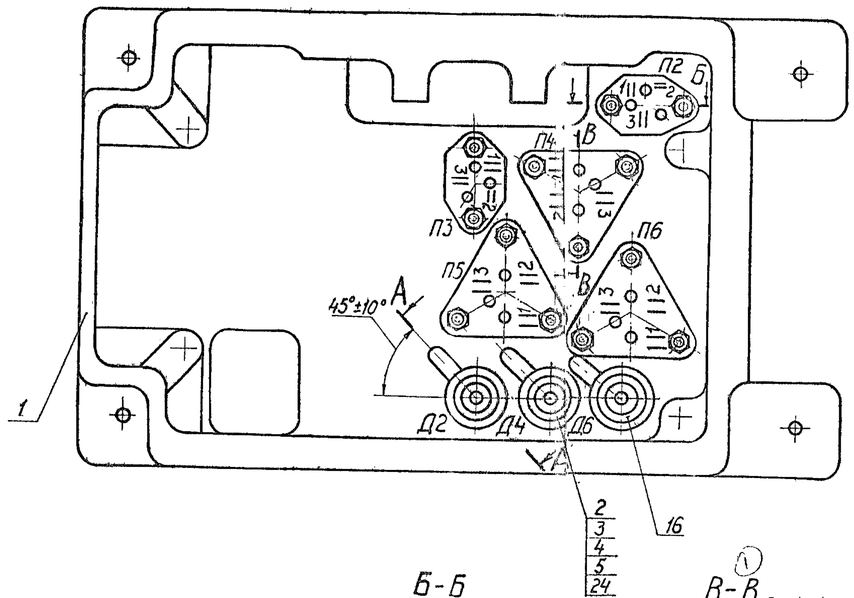

Б-Б
М2:1

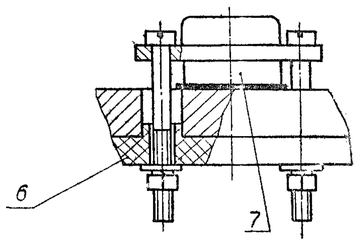

(1)
В-В Revolved
М2:1

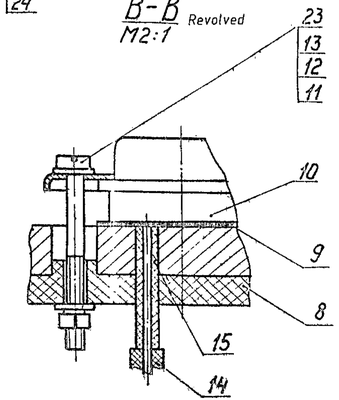

(2)
А-А Revolved
М2:1

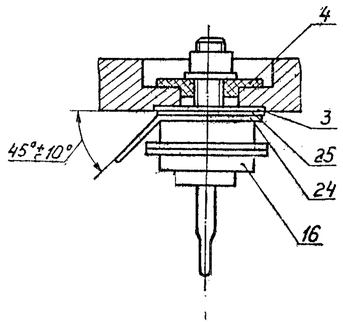

11 Install transistors, Ref No 10 with avalanche breakdown voltage of plug not less than 65V

12. Before and after compound treament insulation between transistor collector and body of unit, and also with body(lug) of each diode and unit body should withstand the test voltage of A C 500V, frequency 50Hz for 1sec

13 Surface of lug, Ref. No 24 from the side of rounding should mate mica surface

14 Pot the nut and remaining part of screw of diodes, Ref No 16 with compound ЭГ-1С OST84-167-70

1 Install trnnsistos, Ref No 10 of same group, Group of transistors is determined by voltage drop (ΔV ЭК) at current load 8A, during this, difference in voltage drop(ΔV ЭК) in group of transistors should be within limitss of 0,05V

2 Wiring and installation of semiconductor elements is as per requirements of technical specifications for them

3 Thickness of set of gaskets, Ref No 3,9 shoud be 65to100microns during this number of gaskets in the set should not exceed 2 pieces

4 Put the sleeves Ref No 14 on the leads of transistors, Ref No 10 upto the stop, against sleeves, Ref No 15, in this case, the sleeve Ref No 14 should be 8to10mm short of the soldering point

5 Insulate the transistors, Ref. No 2,16 (Ref No. 7,10, diods) as per instructions И1-80.

6 Clearance between trasistors, and also distance from them and the body, Ref No 1 is not less than 1.5mm

7 Coat the diodes, Ref No 7 and 10 (Ref. No. 2,16, transistors) with compound МБК-I TY6-16-2228-77 in two layers as per И-9-79

9 Apply marking with enamel MC-17 black TY6-10-1012-78, type 3, as per HO 010 007 in places convenient for reading.

10 Coat all fastening parts with enamel XB-124 of grey GOST10144-74.

Ref. No.	DESIGNATION	DESCRIPTION	QTY	REMARKS
14		Sleeve III-TB-40-230-3x0 4 of white GOST19034-73.	0 6	M
25	X3-11005	Washer	2	
24	PH10 033	Lug	3	
23		Screw M3-6gx28 36 016 GOST1491-72.	13	X1-11641
16		Diode Д231A YЖ 3 362 018TY	2	Without lug
15		Sleeve III TB-40-230-2 5 of white GOST1904-73	0.18	M
13	X2-10598	Nut M3 5A 016 GOST5927-70	13	
12	X-10581	Washer 3 65Г 06 GOST6402-70	13	
11	X3-9675	Washer	22	
10		Transistor of type П210A ШМ3.365.037TY	3	
9	P10T 125	Gasket	6	
8	PФ1270	Board	3	
7	KT6 090	Transistorin assembly	2	
6	PФ1430	Board	2	
5	X-1482	Washer6 65Г 06 GOST6402-70	1	
4	P10T 132	Bush	3	
3	P10T 120	Inslating gasket	6	
2		Diode Д 231 YЖ 3 362 018TY	1	Without lug
1	PH10.001	Body	1	

PH10-070

38
I-615

SNO	SHT	DOC NO	SIGN	DATE
DRAWN		PRASAD	Prasad	22.12.84
EDT.C.&KD		L. Sankar	[illegible]	28.12
F/M, D.C.		S R MANI	[illegible]	19/85
DIV.OFFR		A.K. KUNDU	[illegible]	16.2.85
		NAME	SIGN	DATE

UNIT

SHEET	WEIGHT	SCALE.
		1:1
TOTAL SHEETS		

ORDNANCE FACTORY PROJECT HYDERABAD

FORMAT	ZONE	REF. NO.	DESIGNATION	DESCRIPTION	QTY	REMARKS
				Technical papers		
11			PH10.170CБ	Assembly drawing		
				Assembly units		
				Parts		
11		2	PH10 025	Angle piece	1	
11		8	8X-1497	Washer	1	
				Standard items		
		11		Washer 3 65Г 06		
				GOST 6402-70	1	X-10581
				Other items		
		14		Electromagnetic relay		
				РЭС-6 РФ0.452 104		
				РФ0.523.009 ТУ	1	

37
I-615

39
I-615

PH10 170

S NO	SHT	DOC NO.	SIGN	DATE
DRAWN BY		PRASAD		21 12 84
CHECKED		B. Sarkar		28.1.85
F/M DC.		S.R NAIR.		18/1/85
DIV OFFR		A.K.KUNDU		16.2.85
		NAME.	SIGN.	DATE

ANGLE PIECE

SHT.NO.	TO NO.OF.SHT
	1

PH10 170Cb

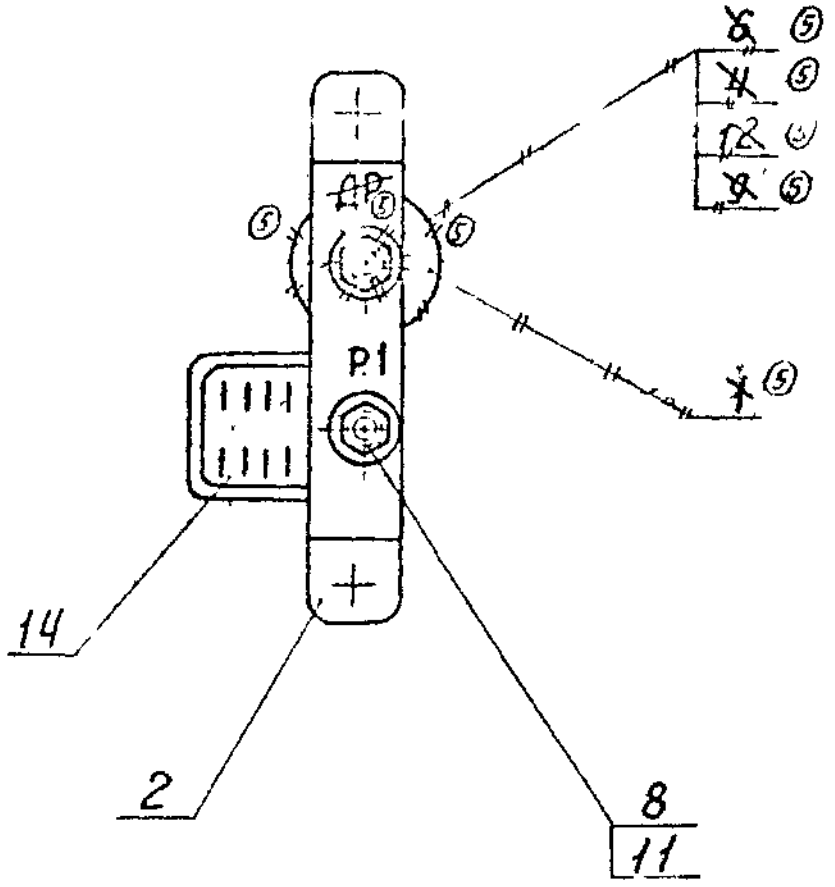

1 Provide inscription with enamel Mc-17 black TY6-10-1012-78, with type 3 as per HO 010 007

2 Coat the fasteners with enamel XB-124 grey GOST 10144-74

40/615

ЕСКД

SLNO	SHEET	DOCNO	SIGN	DATE
DRAWN BY		PRASAD		21 12 84
EDITED AND CHECKED BY		B B SARKHEL		28.1.85
FOREMAN OF DC		S R NAIR		18 1 85
DIVISIONAL OFFICER		A K KUNDU		16.2.85
		NAME	SIGN	DATE

PH10 170Cb

ANGLE PIECE

ASSEMBLY DRAWING

SHEETS	WEIGHT	SCALE
1	6 0074	1:1

TOTAL SHEETS

ORDNANCE FACTORY PROJECT HYDERABAD

Перв. примен. PH10 170

Подпись и дата

Инв. № дубл.

Взам. инв. № 12445

FORMAT	ZONE.	REF. NO.	DESIGNATION.	DESCRIPTION.	QTY	REMARKS
				Technical papers		
12			PH10.190СБ	Assembly drawing		
				Assembly units		
11		1	PH10.060	Board	1	
11		2	PH10.170	Angle piece	1	
11		4	PH10.210	Board	1	
11		5	PH10.250	Board	1	
				Parts		
11		7	PH10.015	Gasket	1	
12		9	PH10.019	Chasis	1	
11		11	PH10.026	Gasket	1	
11		13	БК.8.942.258	Washer	4	
11		15	8X-189	Washer	3	

41
I-615

PH10.190

S NO	SHT	DOC NO.	SIGN	DATE
DRAWN BY		PRASAD	Prasad	22.12.84
CHECKED		B.Samuel	Samuel	28/12
F/M DC		S R NAIR.		18/185
DIV OFFR.		A.K.KUNJU		16.2.85
		NAME.	SIGN.	DATE

CHASIS

SHT.NO.	TO NO.OF.SH
1	2

FORMAT	ZONE	REF. NO.	DESIGNATION.	DESCRIPTION.	QTY	REMARKS
11		17	X3 - 4033	Washer	4	
11		19	X5 - 114 -53	Washer	2	
				Standard items		
		21		Screw M3-6gx10.36.016 GOST 1491-72	3	X1-10539
		23		Screw M4-6gx10.36 016 GOST 17473-72	4	8X-1548
		25		ScrewM3-6gx8.36.016 GOST 17475-72	2	X1-10560
		27		Washer GOST6402-70 3 65Г 0 6	3	X-10581
		28		4 65Г 06	4	X-1012
				Other items		
		30		Fuse ПЦ-30-2 АГ 0 481.501 ТУ	1	

42
I-615

PH10.190

S NO	SHT	DOC NO.	SIGN.	DATE
DRAWN BY		PRASAD	prasad	22 12 84
CHECKED		B. Samuel		28/12
F/M DC.		S.R NAIR.		18/185
DIV.OFFR.		A K KUNDU		16 2.85
		NAME.	SIGN.	DATE

CHASIS

SHT.NO.	TO NO.OF.SHT
2	2

PH10.190CБ

PH10.190

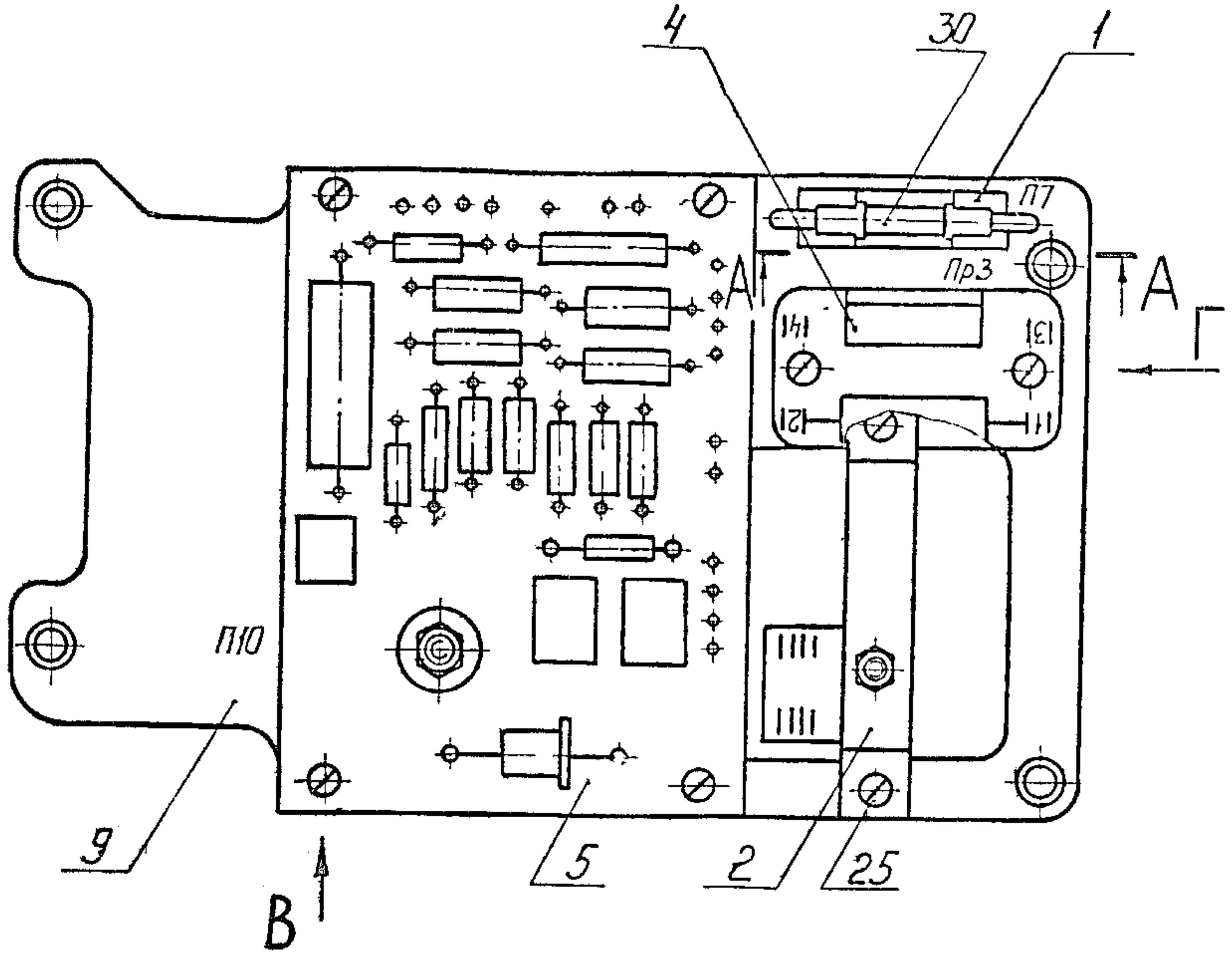

A–A

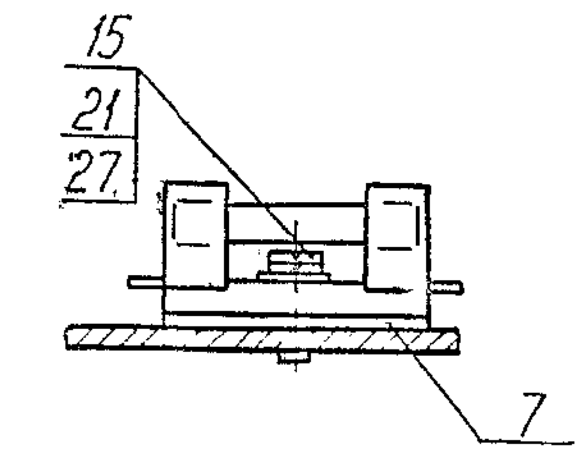

A

View- B

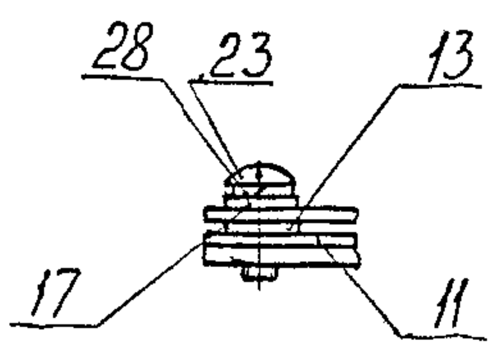

View- Г

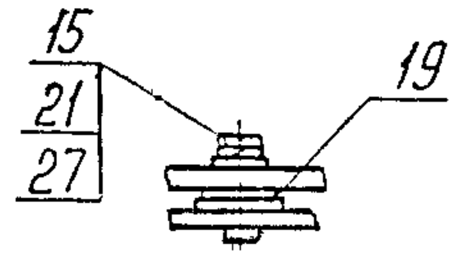

1 Secure screws, Ref No 25 with enamel XB-124 grey GOST 10144-74

2 Coat all fasteners with the same enamel

3, Wash the jaws and fuse with ethyl alcohol GOST 17299-78 before installing fuse, Ref No 30

4 Make inscription with enamel MC-17 black TY6-10-1012-78, with type3 as per HO 010.007 in places, where it is convenient for reading

43 / I-615

ЕСКД

SNO	SHT	DOC NO	SIGN	DATE
DRAWN		PRASAD	Prasad	22.12.84
EDT, CHKD		B. Sarkar	[signature]	28.12
F/M, DC.		S R NAIR	[signature]	18/85
DIV. OFFR		A K. KUNDU	[signature]	16.2.85
		NAME	SIGN	DATE

I-H10.190CБ			
CHASIS ASSEMBLY DRAWING	SHEET	WEIGHT	SCALE
	Б	3302	1:1
	TOTAL SHEETS		
	ORDNANCE FACTORY PROJECT HYDERABAD		

27586 (подл.) 21.11.79 12447

Подп. и дата | Зам. инв. № | Инв. № дубл. | Подп. и дата

FORMAT	ZONE	REF. NO.	DESIGNATION.	DESCRIPTION.	QTY	REMARKS
				Technical papers		
11			PH10.210СБ	Assembly drawing		
11		1		Assembly units		
11		1	РФ 1290	Board	1	
				Parts		
11		2	P10T 143	Resistor	1	
				Other items		
		4		Sleeve КБГИ-4		1 Piece, may be replaced by Ref No5
				ОЖ0 786 000 TY		
		5		Sleeve КБГИ-4		1,piece may be replaced by Ref No.4
				Non-metalized		
				ОЖ0 786 000TY		

44
I-615

PH10 210

S NO	SHT	DOC NO.	SIGN.	DATE
DRAWN BY		RASAD		22.12.84
CHECKED		B. Sankar		28/12
F/M DC.		S R NAIR.		18/8
DIV.OFFR		A K KUNDU		16.2.85
		NAME.	SIGN.	DATE

BOARD

SHT.NO.	TO NO.OF.SHT
	1

PH10.210.CБ

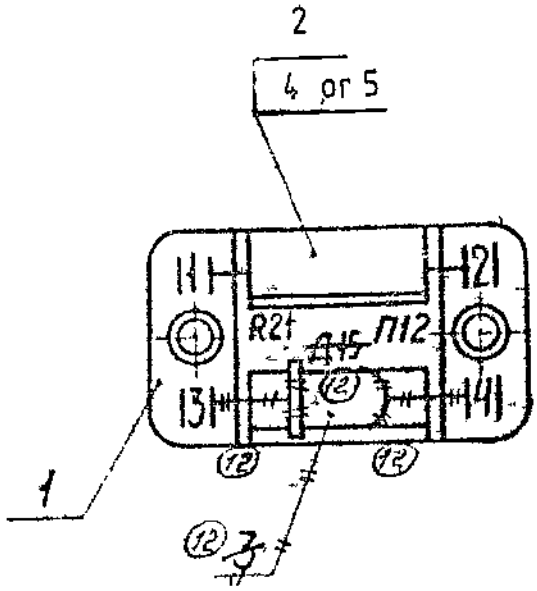

1. Carryout the soldering with solder ПОССу 61-0.5 GOST 21930-76 with flux ФКСп OST 4Г 0 033 000

2. Make inscriptions with enamel ПФ-115 white GOST 6465-76 WITH type 3 as per HO 010 007 in places convenient for reading

45
I-615

ЕСКД

PH10.210.CБ

15	1	АЩП633 9/10-81		17.81
14	1	АЩП 2631-81		2.81
12	11	АЩП 1111-80		3.80
SNO	SHT	DOC NO	SIGN	DATE
DRAWN		PRASAD	Prasad	21.12.84
EDT, CHKD		B. Sarkar		28.1.2
F/M, DC.		S R NAIR		18.1.85
DIV.OFFR		A K KUNDU		16.2.85
		NAME	SIGN	DATE

.BOARD
ASSEMBLY DRAWING

SHEET	WEIGHT	SCALE
	0,019	1:1
	TOTAL SHEETS	

ORDNANCE FACTORY PROJECT HYDERABAD

FORMAT	ZONE	REF. NO.	DESIGNATION	DESCRIPTION.	QTY	REMARKS
				Technical papers		
			PH10.220СБ	Assembly drawing		
				Assembly units		
		1	Pφ1.290	Board	1	
				Parts		
		2	P10T.143	Resistor	2	R9, R10
				Other items		
		4		Sleeve КБГИ -4 ОЖ 0.786.000ТУ		2Piecesmay be replaced by Ref.No.5
		5		Sleeve КБГИ -4, non-metalized ОЖ 0.786.000ТУ		2 Pieces may be replacedby Ref No 4.
				Materials		
		6		Wire MM-0.8 GOST2112-71	60	mm.

46
I-615

PH10 220

S NO	SHT	DOC NO.	SIGN.	DATE
DRAWN BY		P.PRASAD	Prasad	21.12.84
CHECKED		B.Sankar		28/12
F/M DC.		S.R.NAIR.		18/85
DIV.OFFR.		A.K KUNDU		16.2.85
		NAME.	SIGN.	DATE

BOARD

SHT.NO.	TO.NO.OF.SH
	1

PH10.220СБ

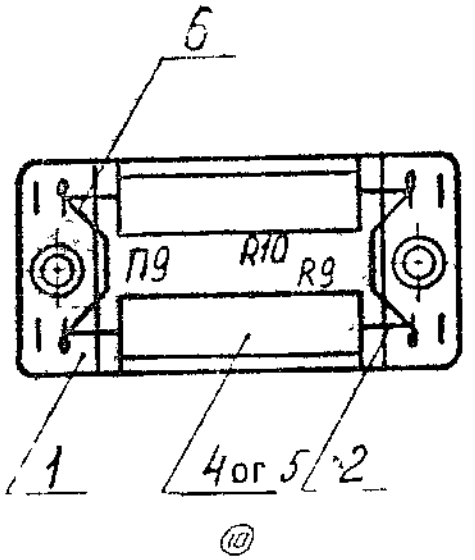

1. Jumpers are provided with wire Ref No,6. Solder with ПОССу 61-0.5 GOST21930-76 Flux ФКСп OST4Г 0 033 000

2 Make inscriptions with enamel ПФ-115 white GOST6465-76,type3 as per HO 010 007, in places convenient for reading

3. Technical requirements for electrical wiring are as per HO 010 001.

4.7
I-615

ECKD

PH10.220СБ

SNO	SHT	DOC NO	SIGN	DATE
DRAWN		PRASAD	prasad	21 12 84
EDT,CHKD		b.Saxena		28/12
F/M,DC.		S R NAIR		18185
DIV.OFFR		A.K.KUNDU		16.2.85
		NAME	SIGN	DATE

BOARD

ASSEMBLY DRAWING

SHEET	WEIGHT	SCALE.
	0.02	1:1
TOTAL SHEETS		

ORDNANCE FACTORY
PROJECT
HYDERABAD

PH10.230

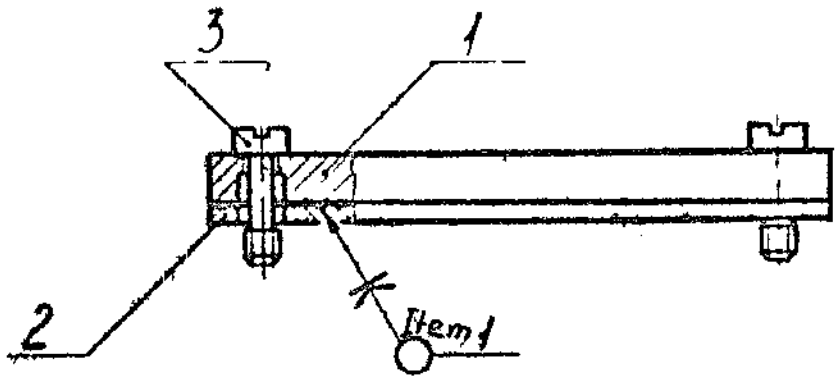

1 Cement the gasket Ref No 2 to the cover Ref No.1 with cement 88-N TY38 105 1061-76

2 It is allowed to use cement 88 НП TY 38 105 540-73.

FORMAT	ZONE	REF NO	DESIGNATON	DESCRIPTION	QTY	REMARKS
12				Parts		
12		1	PH10.004	Cover	1	
11		2	KT6.008	Gasket	1	
11		3	X1-10871	Screw	6	

4.8
I-615

PH10.230

SNO	SHT	DOC NO	SIGN	DATE
DRAWN		PRASAD	Prasad	21 12 84
EDT&CHKD		B. Samuel	[illegible]	[illegible]
F/M, D.C.		S R NAIR	[illegible]	18 1 85
DIV.OFFR		A K KUNDU	[illegible]	16.2.85
		NAME	SIGN	DATE

COVER

SHEET	WEIGHT	SCALE
	40.7g	1:1

TOTAL SHEETS

ORDNANCE FACTORY PROJECT HYDERABAD

FORMAT	ZONE	REF. NO.	DESIGNATION.	DESCRIPTION.	QTY	REMARKS
				Technical papers		
12			PH10.240СБ	Assembly drawing		
				Assembly units		
12		1	P10TM-4C2 140	Board	1	
				Other items		
		2		Resistor		
				УЛИ -0 125-20,50hm±2%		
				ОЖ0 467 013ТУ	1	
		3		Resistor		
				УЛИ -0 5-86 6 Ohm±2%		
				ОЖ0 467 013ТУ	1	
				Materials		
		4		Wrie mm0 5		
				GOST2112-71	90mm	
		5		Wire 2-C-X15H60		
				GOST127661-77	40±0 5mm	
		6		Sleeve ТЛВ0 5		
				GOST9614-75	40 mm	

49
I-615

PH10 240

S NO	SHT	DOC NO.	SIGN.	DATE
DRAWN BY		PRASAD	Prasad	22 12 8
CHECKED		?	?	?
F/M DC		S R NAIR.		18 1 85
DIV OFFR		A.K. KUNDU		18.2.85
		NAME	SIGN.	DATE

BOARD

SHT.NO.	TO NO.OF.SHT
	1

PH 10.240 СБ

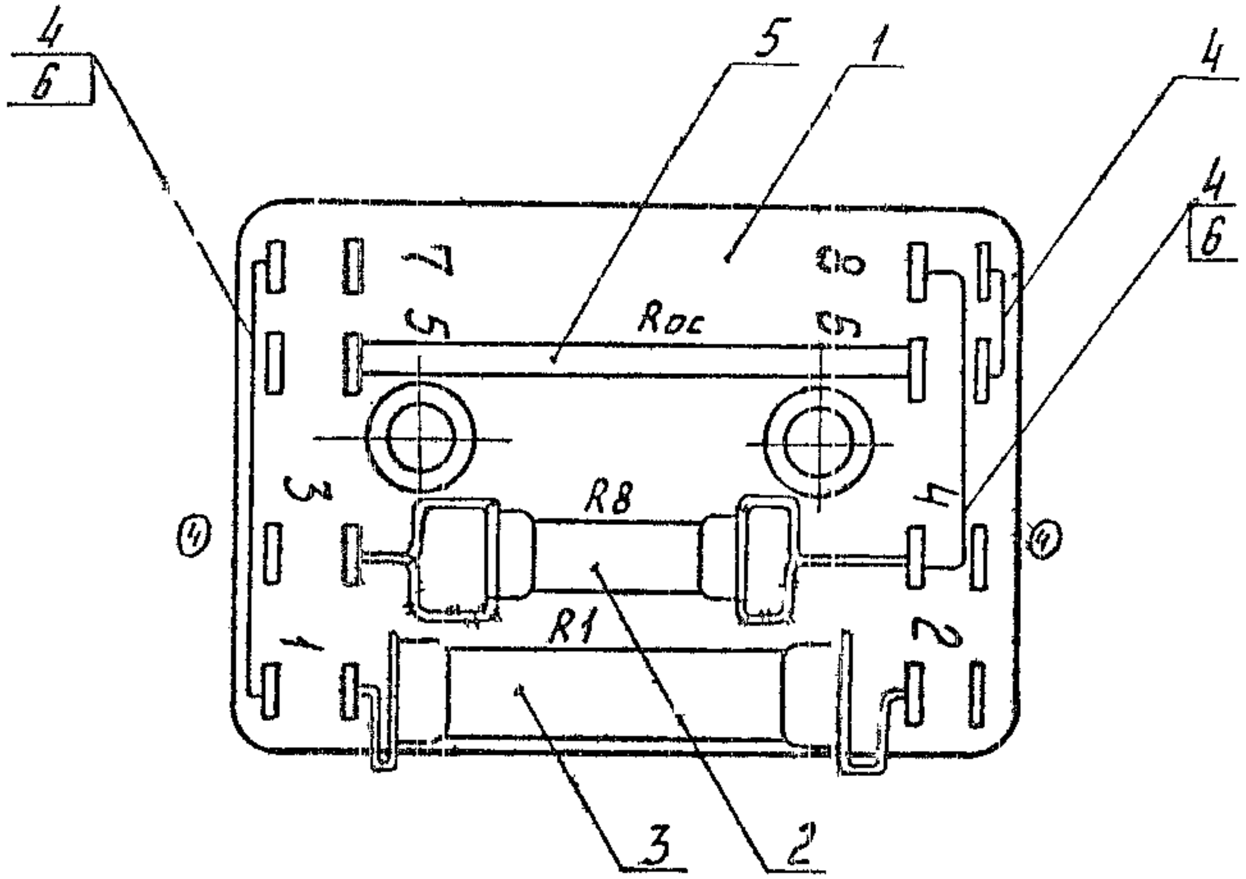

1 Press the leads of resistor,Ref.No.5 upto 1.4mm before installing on both sides. Copper plate the resistor leads at length 5to8mm, thickness 3to5microns, then tin the leads with solder ПОССу61-0.5 GOST 21930-76 with flux ФКСп OST4Г 0.033.000.

2. Jumpers are provided with wire, Ref.No.4 in sleeve,Ref.No.6,before applying coating, Cadmium 3microns.

3 Carryout soldering using solder ПОССу61-0.5 GOST21930-76 with flux ФКСп OST4Г 0.033 000.

4. Marking of board and elements is made with enamel ПФ-115 white GOST6465-76 type3 as per H0.010.007,in places convenient for reading.

5, Technical requirements to wire as per H0.010.001.

6	4	АЦЛ 144-80	7.08.80
5-2		АЦЛ 514 3/4-78	8.2.79
4-3-		АЦЛ 334	19.1.79
3	1	АЦЛ 214 3/4-...	1.79

PH 10.240 СБ

SNO	SHT	DOC NO	SIGN	DATE
DRAWN		PRASAD	Prasad	22.12.84
EDT,CHKD		G. Samuel		28.1.2
F/M,DC.		S R NAIR		18.1.85
DIV.OFFR		A.K.KUNDU	A.K.	16.2.85
		NAME	SIGN	DATE

BOARD

Assembly drawing

SHEET	WEIGHT	SCALE
		1:1
TOTAL SHEETS		

ORDNANCE FACTORY PROJECT HYDERABAD

ЕСКД

50 I-615

Восстановлен с подлинника

Подп. 12.12.74

10085

РА-10

7 | 1 | АЦЛ 263

FORMAT	ZONE	REF. NO.	DESIGNATION.	DESCRIPTION.	QTY	REMARKS
				Technical papers.		
24			PH10 250СБ	Assembly drawing		
12			PH10 250Э3	Schematic circuit diagram		
				Parts		
12		1	PH10 029	Gasket	1	
22		2	PH10 037	Board	1	
12		3	Бу40М 016	cap	2	
11		4	БК8 109 890	Angle piece	1	
11		5	Bə8 942 008	Washer	1	
11		6	Bə8 945 000	Spring washer	1	
11		7	P101-157	Lug	2	
11		8	P10T 158	Washer	2	
11		9	~~P10M 226~~ PIOTM.226	Washer	2	
11		11	X6-10783	Rivet	2	

51/I-615

51 I-615

PH10.250

BOARD

S NO	SHT	DOC NO.	SIGN.	DATE
DRAWN BY		S Gopal	[signature]	21/12
CHECKED		D.K. SAIN	[signature]	28/12/…
F/M DC.		S.R NAIR..	[signature]	18/…
DIV.OFFR.		A K. KUNDU	AK.	16.2 …
		NAME.	SIGN.	DATE

SHT.NO.	TO.NO.OF.SHT
1	4

FORMAT	ZONE	REF. NO.	DESIGNATION.	DESCRIPTION.	QTY	REMARKS
				Standard items		
		13		Screw M3-6gx2036 016		
				GOST1491-72	1	X1-11653
		14		Nut M3 5A 016		
				GOST5927-70	1	X2-1059
		15		Washer3.01.016		
				GOST104 50-78	1	8X-189
		17		Washer3.65Г-06		
				GOST6402-70	1	X-10581
		19		Washer 4.65Г.06		
				GOST6402-70	1	X-1012
				Resister ОЖ0 46 7 107TY		
		26		ОМЛТ0 5В-5 1k Ohm±5%	1	R18
		27		ОМЛТ-0 5-В27k Ohm±5%	1	R5
		29		ОМЛТ-2В-510±5%	4	R6,R7
						R12;R13
		31		Temperature-sensitive		R15
				resistor MMT-9 750m±10%		
				GOST10688-75	1	1to3
		35		CapacitorМБМ-160-0.5±10%,	1	C2
				ОЖ0 462 032 TY		
				Other items		
		40		DiodeД223Б СМ3 362 018TY	1	Д11

52
I-615

PH10 250

BOARD

S NO	SHT	DOC NO.	SIGN.	DATE
DRAWN BY		S.Gopal	[signature]	20/12
CHECKED		D K JAIN	[signature]	28/12/
F/M DC.		S R NAIR.	[signature]	18185
DIV OFFR.		A.K KUNDU	[signature]	16 2 85
		NAME.	SIGN.	DATE

SHT.NO.	TO NO OF.SHT
2	4

FORMAT	ZONE	REF NO.	DESIGNATION	DESCRIPTION.	QTY	REMARKS
						70/1
		42		Fuse		
				ВП-2-2 0а0Ю0 480.003ТУ	5	Пр8 пр12
		43		Resistor		
				СП5-2-1Вт150,0М±5%		
				ОЖ0468 506 ТУ	1	B17
				Resistor ОЖ0467 013 ТУ		
		45		УЛИ0,125-36,5 Ом±2%	1	R4
		46		УЛИ-0,125 68,1 Ом±2%	1	R16
		48		Resistor С5-5-2Вт		
				240 ОМ±1%		
				ОЖО 467.505Ту	1	R3
		49		Electro magnetic relay of		
				type РЭС10, РС4.529 031-05		
		50		РС0 452 049ТУ	1	P3
				Electro magnetic relay of		
				type РЭС10, РС4 529.031-06 РС0 452 049ТУ	1	P4
		51		Stabilizer diode Д816А		
				УЖ3 362 027 Ту	1	Д5
				Material		
		55		Wire GOST 2112-71		Гор. Поосу
				ММ - 0,8	0,24	Б1-0,5
					М	окка 12
		56				
				ММ-1 L = 14±1	0,26 М	

S NO	SHT	DOC NO.	SIGN.	DATE
DRAWN BY		S Gopal	S Gopal	21/12
CHECKED		D K JAIN		28.12.85
F/M DC.		S.R.NAIR.		18.1.85
DIV OFFR.				
		NAME.	SIGN.	DATE

PH10 250

53
I-615

BOARD

SHT.NO.	TO.NO.OF.SH
3	4

FORMAT	ZONE.	REF. NO.	DESIGNATION.	DESCRIPTION.	QTY	REMARKS
				Sleeve GOST9614-75		
		57		T/B 1	0,1m	
		58		T/B 3	0,008m	

54
I-615

PH10 250

BOARD

S NO	SHT	DOC NO.	SIGN	DATE
DRAWN BY		S Gopal	S Gopal	21/12
CHECKED		D K JAIN		18 12 84
F/M DC.		S R NAIR.		18 1 85
DIV OFFR		A.K.MAITI		16.1.85
		NAME.	SIGN.	DATE

SHT.NO.	TO NO.OF.SHT
4	4

РН10.250 93

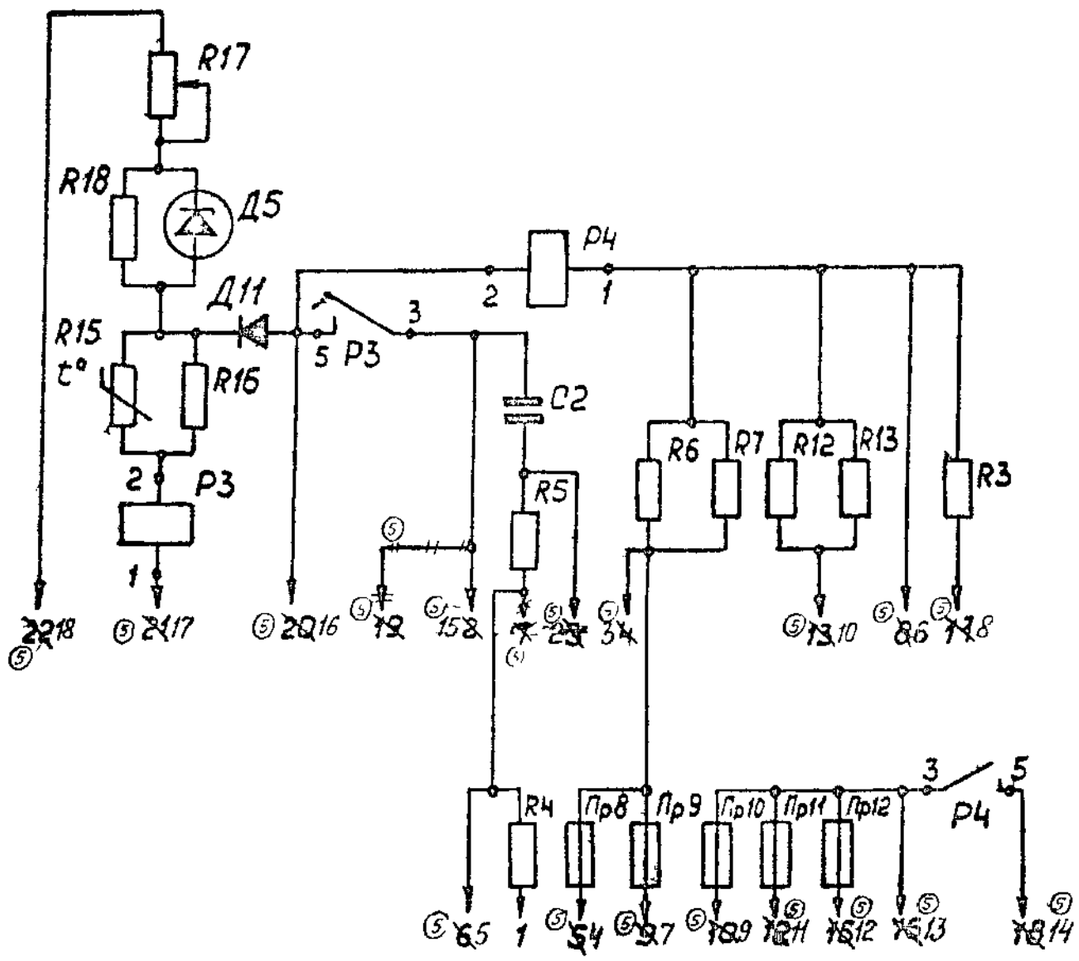

zone	Ref No Designation	Description	Qnt	Remarks.
	R3	Resistor С5-5-2Вт 240 Ом±4% ОЖО 467 505ТУ	1	
	R4	" УЛИ-0 125-36 5±2% ОЖО 467 013ТУ	1	
	R5	" ОМЛТ-0 5-27КОм±5% ОЖО467 107ТУ	1	
	R6 R7 R12 R13	ОМЛТ-2-5100Ом±5% ОЖО 467 107ТУ	4	
	R15	Temparature ММТ9-750м±10% GOST10688-75	1	
	R16	Resistor УЛИ-0,125-68Ом±2% ОЖО 467 013ТУ	1	
	R18	" ОМЛТ-0 5-5 1КОм±5% ОЖО 467 107ТУ	1	
	R17	Resistor СП5-2-1Вт150Ом±5% ОЖО 468 506ТУ	1	
	C2	Capacitor МБМ-160-0 5±10%		
		ОЖО 462 032ТУ	1	
		Stabilizer Д816А УЖ3 362.027ТУ	1	
		Diode Д223Б СМ3 362 018ТУ		
		Fuse ВП1-2-2А ОЮ0 480 003ТУ	5	
		Electro magnetic relay type РаС10 РС4 520 031-05		
	P3	РС0 452 049ТУ	1	
	P4	РС4 520 031-06 РС0 452 049ТУ	1	

56
I 615

РН10.250 93

SNO	SHT	DOC NO	SIGN	DATE
DRAWN		S Gopal		22/12
EDT,CHKD		D K JAIN		28/12 85
F/M,DC		S R NAIR		18/85
DIV.OFFR		A.K.KUNDU		16.2.85
		NAME	SIGN	DATE

BOARD

Schematic circuit diagram

SHEET	WEIGHT	SCALE.

TOTAL SHEETS

ORDNANCE FACTORY PROJECT HYDERABAD

196 33 (подп) 17 5 76

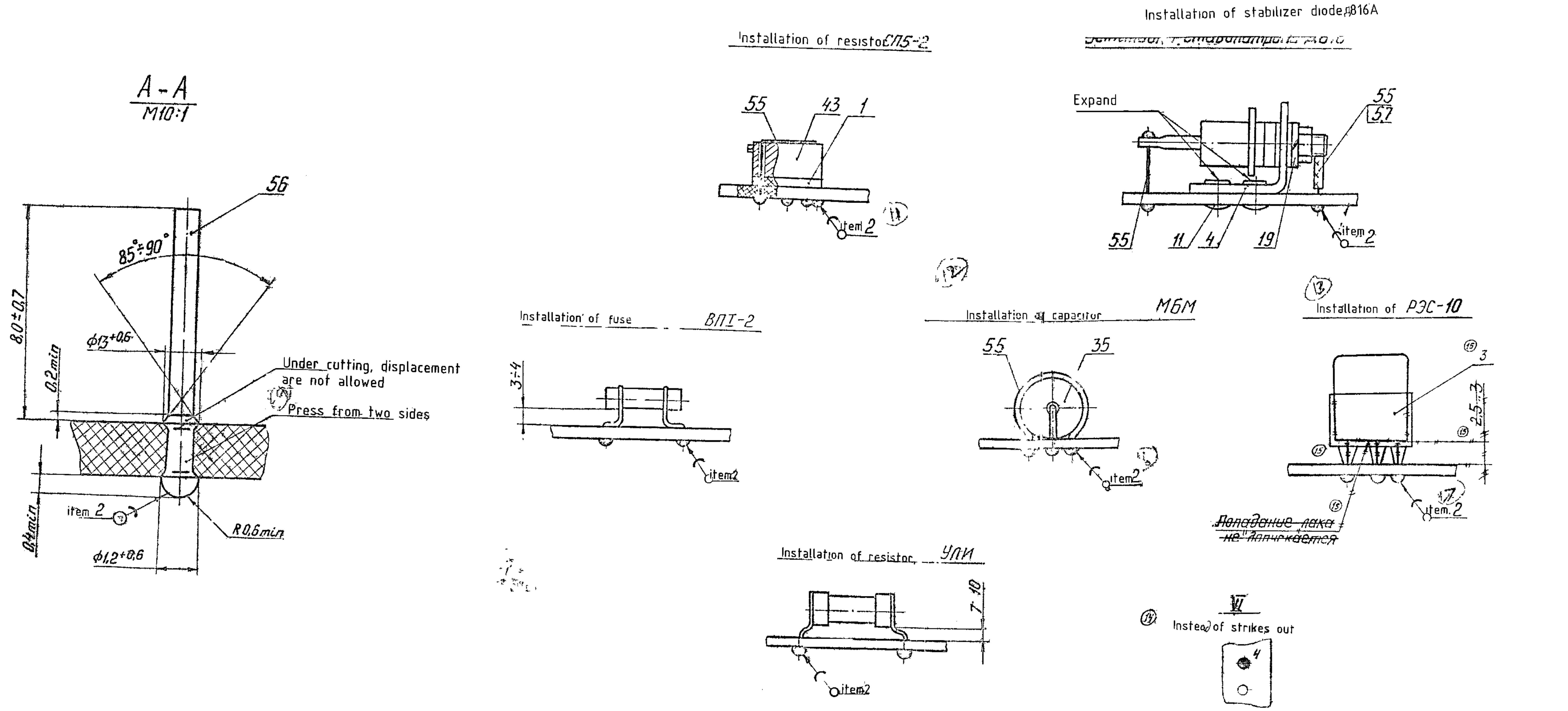

1 Assembly is carried out as per OST4ГO 054 091

2 Carryout soldering of elements and wires, Ref.No 55 using solder ПОСК-50-18.and solder wire Ref No.56, use solder ПОССу-61-0.5 GOST21930-76 with flux kch as per OST4 ГO 033 00(soldering of elements should corresponding to OST4 ГO 054 089

3 Coat the board with varnish УР-231(3) TY6-10-863-76 as per instructions И-250-78 after assembly. It is allowed to coat with varnish ЭП-730 GOST20824-75 Protect wire, Ref.No 56, against coating with varnish

4 Marking is given conventionally

5 Jumpers loading to lug, Ref.No7 should be turned around them not less than 3/4 of a turn and pressed

6 Install the sleeve, Ref.No 58, in situ up to the stop against the board Ref.No.2

7 Check electrical strength, insulation of screw, Ref No 13 with respect to each lug, Ref.No.7 with voltage 500V a.c. 50Hz for 1 sec

8 Before installing the resistors Ref nos 45,46 press their leads up to dimension 1.5mm

9 When soldering method "wave" is used solder ПОССу61-0.5 GOST21930-76 is employed for soldering the elements

10 Clearence between washers ref nos 5 and 6 (section Б-Б) is 0.2 to 0.5mm

11 Measure the resistance between the terminals 1 and 2, which should be in nominal climatic conditions 45 ohms±10 % after installing relay, Ref.No49 on the board, Ref No 2.

12 Protection of diode, Ref.No40, from static charge is as per OST11 073 062-76

55
I-615

SNO	SHT	DOC NO	SIGN	DATE
DRAWN		S.Gopal		22/12
EDT & CHKD		D.C.JAIN		
F/M, DC		S.R.Nair		18.1.85
DIV.OFFR		A.K.KUNDU		16.2.85
		NAME	SIGN	DATE

PH10.250СБ

BOARD

Assembly drawing

SHEET	WEIGHT	SCALE
		2:1

TOTAL SHEETS

ORDNANCE FACTORY PROJECT HYDERABAD

X-1482

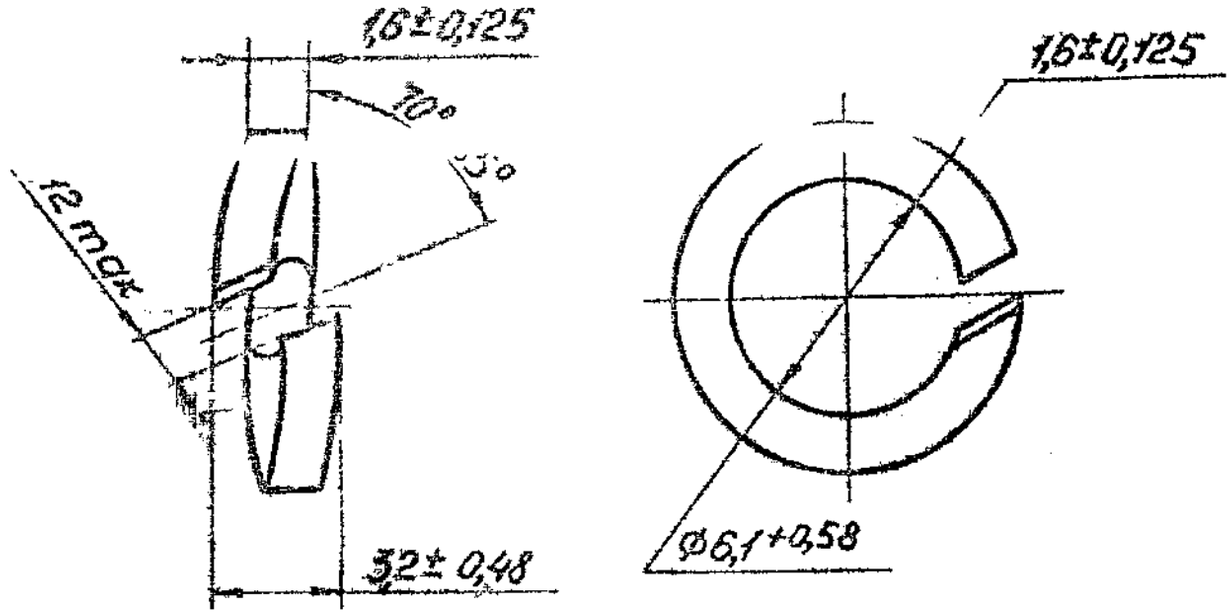

DESIGNATION.	*	COATING.	PERMISSIBLE COATING.
X-1482.	06	Chemically, parkerized, oiled	Chemically, oxidized, oiled.

Technical requirements are as per GOST 6402-70.

Copy is taken from GOST 6402-70.

122
I-615

X-1482

SNO	SHT	DOC NO	SIGN	DATE
DRAWN		R.H PRASAD.		24.12.84
EDT, CHKD		D K JAIN		19 12 84
F/M, DC.		S.R NAIR		15 1 85
DIV.OFFR		A.K. KUNDU		15 2 85
		NAME	SIGN	DATE

WASHER 6 65Г *
ГОСТ 6402-70.

Steel 65Г, ГОСТ 1050-74.

SHEET	WEIGHT	SCALE.
B	0.487gms.	5:1
	TOTAL SHEETS	

ORDNANCE FACTORY
PROJECT
HYDERABAD

X-10581

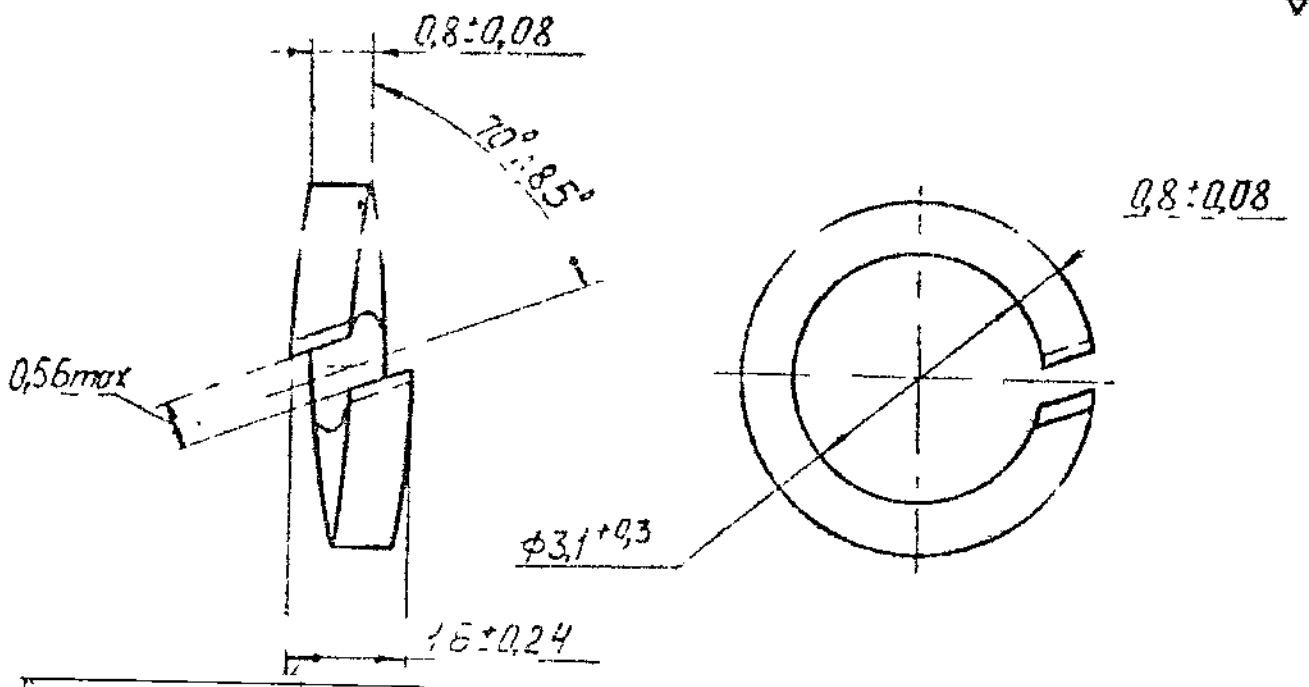

Designation	*	Coating	Permissible coating
X1-10580	06	Chemically, parkerized, oiled,	Chemically, oxidized, oiled Zinc-plated, 6microns thick, chromatizing Cadmium, 6microns thick, chromatizing

Technical requirements are as per 6402-70

135
I-615

ECKII

X-10581

SNO	SHT	DOC NO	SIGN	DATE
DRAWN		PRASAD	Prasad	24 12 84
EDT, CHKD		A.K. DUBEY		
F/M, D.C.		S R NAIR		18 1 85
DIV.OFFR		A.K. KUNDU		15.2.85
		NAME	SIGN	DATE

WASHER 3 65Г *
GOST 6402-70

Steel 65Г GOST 1050-74

SHEET	WEIGHT	SCALE.
	0,062g	10:1
TOTAL SHEETS		

ORDNANCE FACTORY PROJECT HYDERABAD

X1-10527

▽4(▽)

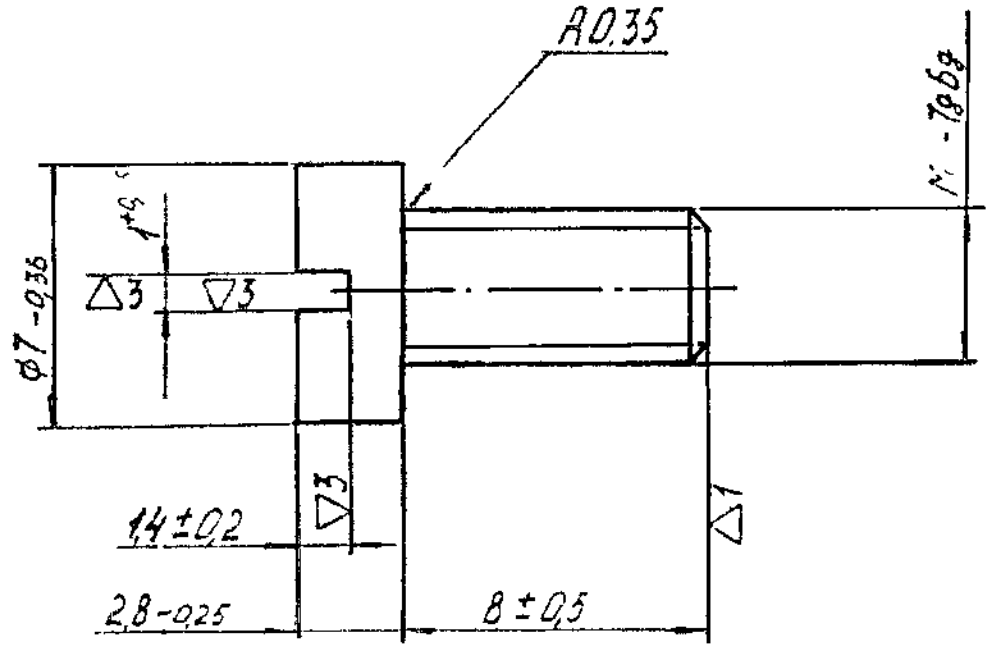

Designation	*	Coating
X1-10527	016	Zinc-plated, 6microns thick,chroma-
		tizing Composition of solution for chromatizing is as per И-252-79

1 Maxium misalignment of head and slot axes with respect to body axis is 0 15mm

2 Technical requirements are as per GOST1759-70

Copy is take from GOST1491-72

129
I-615

X1-10527

SCREW
M4-7g6gx8 36*
GOST 1491-72

Steel 10
GOST 1050-74

SHEET	WEIGHT	SCALE
5	1,3½	5:1

TOTAL SHEETS

ORDNANCE FACTORY PROJECT HYDERABAD

SNO	SHT	DOC NO	SIGN	DATE
DRAWN		PRASAD		22 12 84
EDT&CHKD		A.K.DOBEY		29.12.84
F/M,DC.		S.R.NAIR		18.1.85
DIV.OFFR		A.K.KUNDU		15.2.85
		NAME	SIGN	DATE

X1-10539

▽4 (▽)

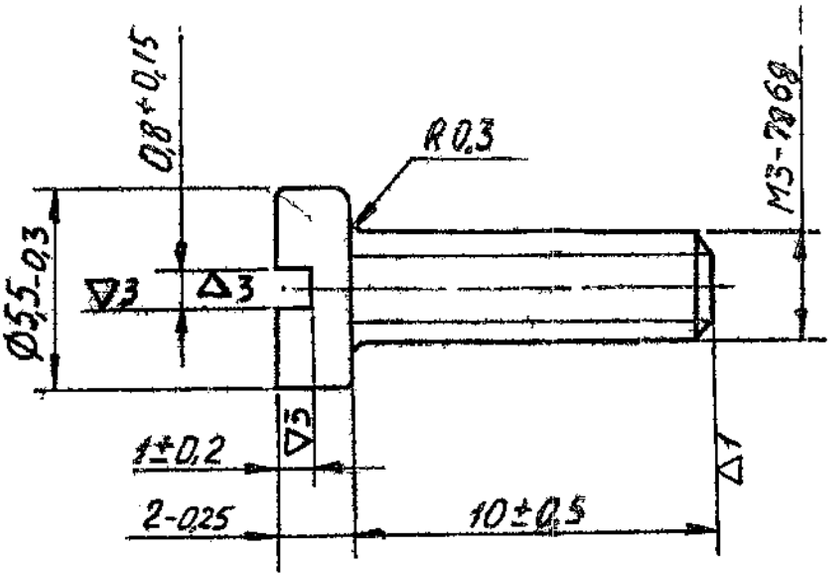

1. Maximum misalignment of head and slot axes with respect to body axis is 0.15mm.

2. Technical requirements are as per GOST1759-70.

Designation	Coating
X1-10539	Zinc-plated,6microns,
	thick, chromatizing

Copy+ is taken from GOST1491-72.

130
I-615

X1-10539

SNO	SHT	DOC NO	SIGN	DATE
DRAWN		PRASAD	prasad	22.12.84
EDT,CHKD		A.K. DUBEY	[illegible]	29.12.84
F/M,DC		S R NAIR	[illegible]	18.1.85
DIV.OFFR		A.K.KUNDU	[illegible]	15.2.85
		NAME	SIGN	DATE

SCREW, M3-7g6gx10,36
GOST1491-72

Steel 10
GOST1050-60

SHEET	WEIGHT	SCALE
	0,7162	5:1
TOTAL SHEETS		

ORDNANCE FACTORY
PROJECT
HYDERABAD

X1-10542

▽4(▽)

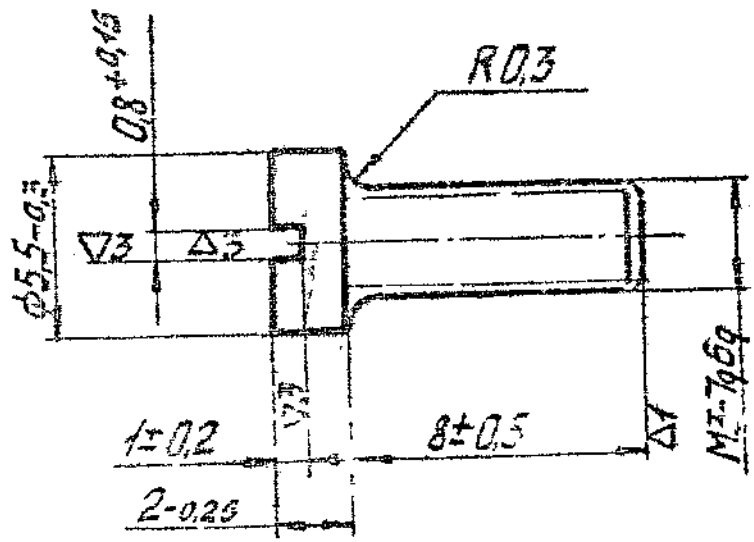

Designation	Coating
X1-10542	Zinc-plated, 6microns thick, chromatizing

1 Maximum misalignment of head and slot axes with respect to body axis is 0.15mm

2 Technical requirements are as per GOST 1759-70

Copy is taken from .GOST 1491-72

131
I-615

X1-10542

SNO	SHT	DOC NO	SIGN	DATE
DRAWN		PRASAD	prasad	22 12 84
EDT, CHKD		A K DESSAY	[illegible]	29 12 84
F/M, D.C.		S R NAIR	[illegible]	18 1 85
DIV.OFFR		A.K.KUNDU	A.K	15 2 85
		NAME	SIGN	DATE

SCREW M3-7g6gx8 36
GOST 141-72

Steel10 GOST 1050-60

SHEET	WEIGHT	SCALE.
	0,629 g	5:1
TOTAL SHEETS		

ORDNANCE FACTORY
PROJECT
HYDERABAD

X1-10557

▽4 (▽)

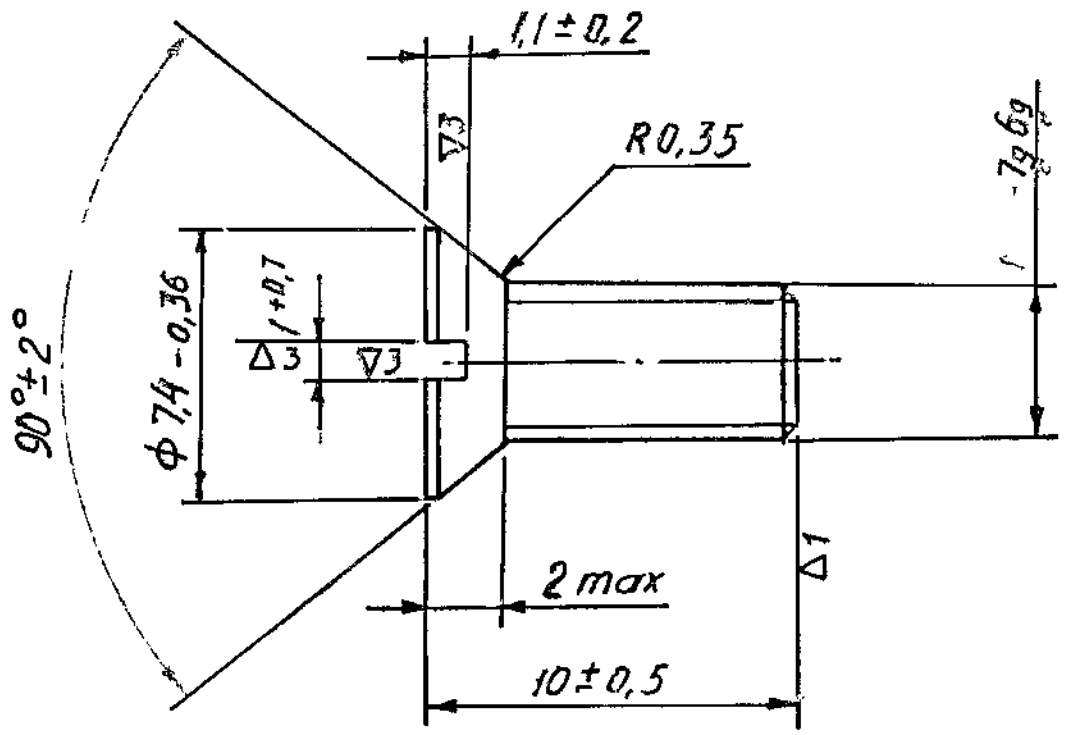

Designation	Coating
X1-10557	Zinc-plated, 6microns thick,
	chromatizing

1. Maximum misalignment of head and slot axes with respect to body axis 0.3mm

2. Technical requirements are as per GOST1759-70

Copy is taken from GOST 17475-72

132
I-615

X1-10557

SNO	SHT	DOC NO	SIGN	DATE
DRAWN		PRASAD	prasad	24 12 84
EDT&CHKD		[illegible]	[illegible]	09 12 [illegible]
F/M, D.C.		S R NAIR	[illegible]	18 1 85
DIV.OFFR		A.K.KUNDU	[illegible]	15.2.85
		NAME	SIGN	DATE

SCREW M4-7g 6gx
10 36 016
GOST 17475-72.

Steel 10
GOST 1050-60

SHEET	WEIGHT	SCALE.
	0,997	5:1
	TOTAL SHEETS	

ORDNANCE FACTORY
PROJECT
HYDERABAD

X1-10560

∇4 (∇)

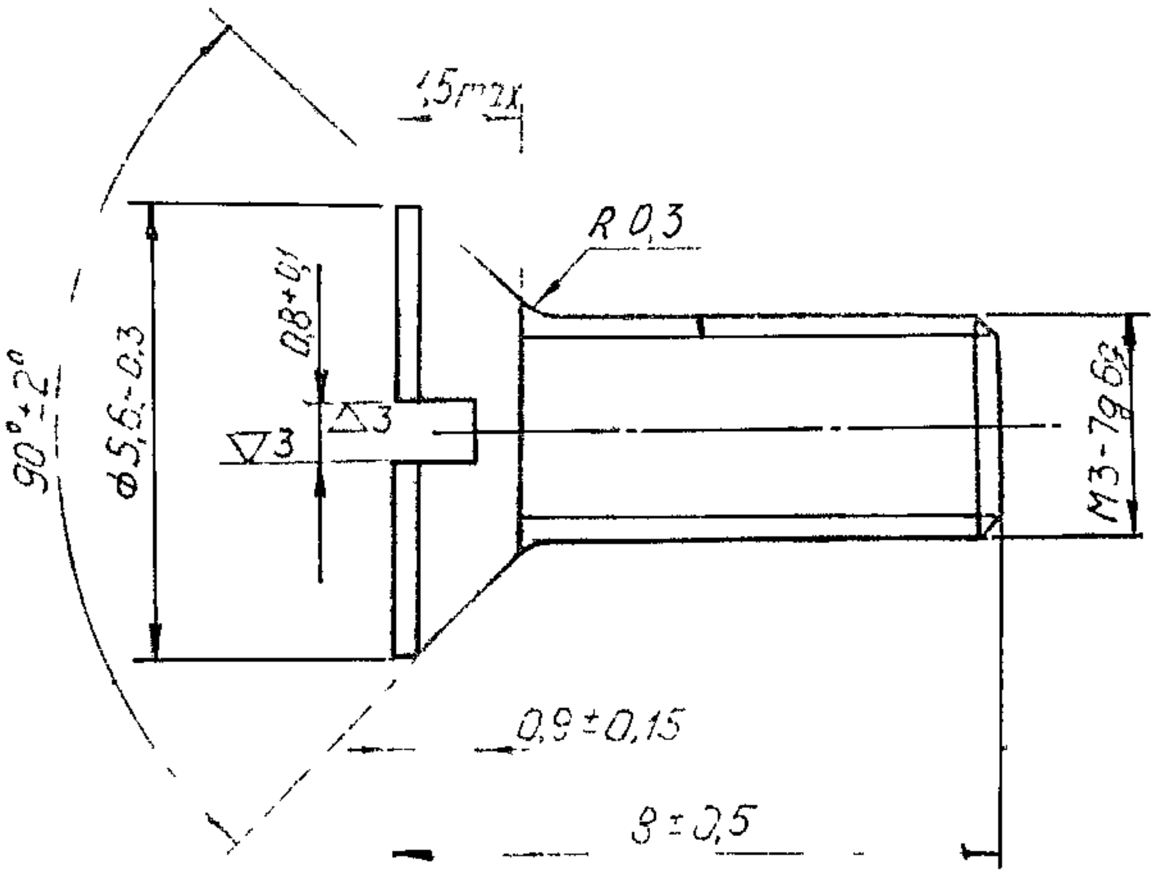

Designation	*	Coating
X1-10560	016	Zinc-plated, 6microns thick, chromatizing
		Composition of solution for chromatizing
		is as per И-252-78.

1 Maximum misalignment of head and slot axes with respect to body axis is 0 15mm

2 Technical requirements are as per GOST 1759-70

Copy is taken from GOST 17475-72

133 / I+615

X1-10560

SNO	SHT	DOC NO	SIGN	DATE
DRAWN		PRASAD	prasad	24 12 84
EDT, CHKD		AK DOBEY	[illegible]	29 12
F/M, DC		S R NAIR	[illegible]	18 1 85
DIV.OFFR		A.K.KUNDU	[illegible]	15-2-85
		NAME	SIGN	DATE

SCREW M3-7g 6gx8 36 *

GOST 17475-72

Steel 10
GOST 1050-74

SHEET	WEIGHT	SCALE
5	0,44г	10:1

TOTAL SHEETS

ORDNANCE FACTORY PROJECT HYDERABAD

X1-10561

∇4 (∇)

Kp-150

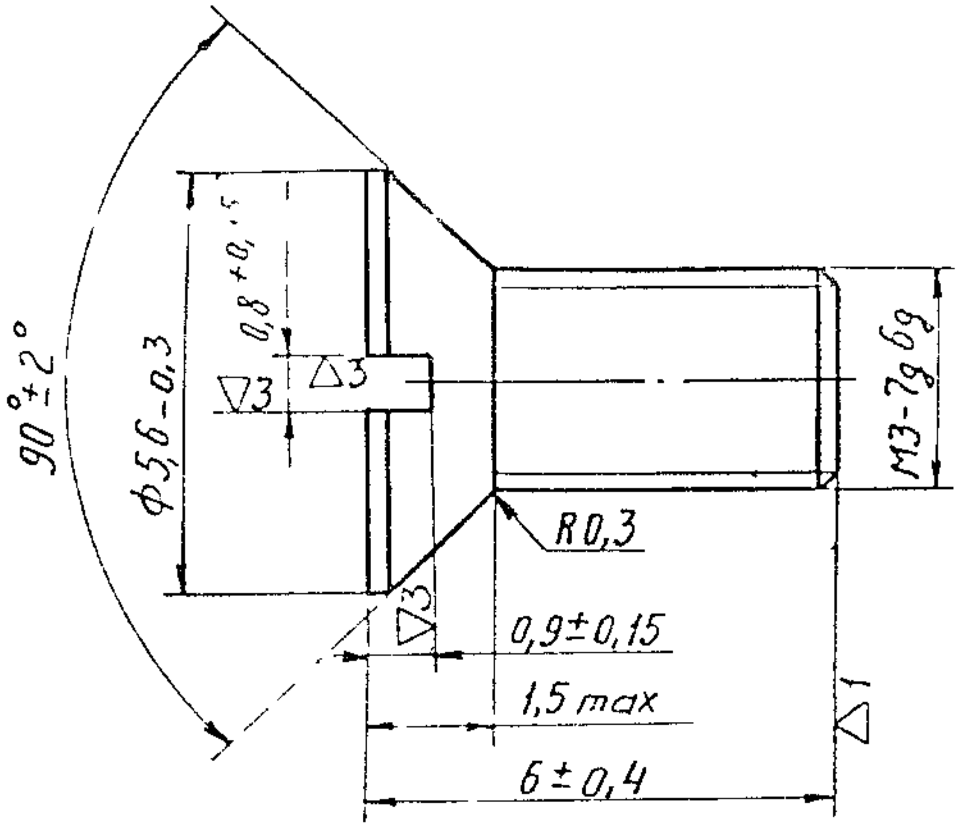

DESIGNATION	COATING
X1-10561	Zinc-plated, 6microns thick,
	chromatizing

1 Maximum misalignment of head and slot axes with respect to body axis 0 15mm

2 Technical requirements are as per GOST 1759 -70

Copy is taken from GOST 17475-72.

134 / I-615

ЕСКД

X1-10561

SNO	SHT	DOC NO	SIGN	DATE
DRAWN		PRASAD	Prasad	24 12 84
EDT,CHKD		AKDUBEY		29.1.85
F/M,DC.		S R NAIR		18.1.85
DIV.OFFR		A.K.KUNDU		15.2.85
		NAME	SIGN	DATE

SCREW M3-7g6gx6 36
GOST 17475-72

Steel 10 GOST1050-60

SHEET	WEIGHT	SCALE
6	0,36/2	10 1

TOTAL SHEETS

ORDNANCE FACTORY PROJECT HYDERABAD

X1-10763

∇4 (∇)

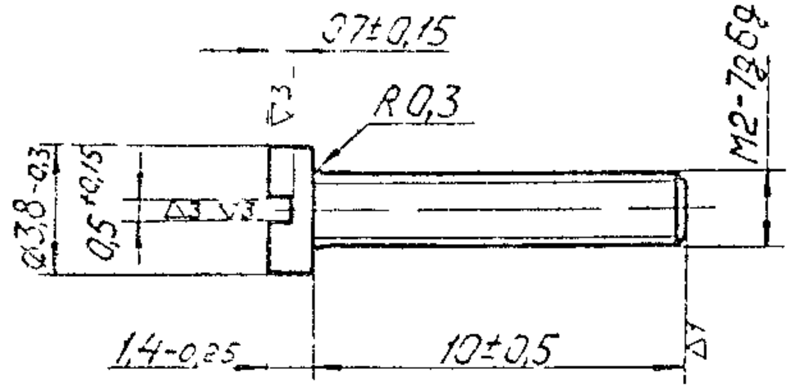

1 Maxmium misalignment of head and slot axes with respcct to body axis is 0.15mm

2. Coating.Zinc-plated, 3to6microns thick, chromatizing Composition of solution for chromatizing is as per instruction u-252-78·

3 Technical requirements are as per GOST1759-70

137 / I-615

ЕСКД

X1-10763

SNO	SHT	DOC NO	SIGN	DATE	
DRAWN		PRASAD	Prasad	24.12.84	
EDT, CHKD		A.K. Dubey	[signature]	29 n.R.	
F/M, DC.		S R NAIR	[signature]	18185	
DIV.OFFR		A.K.KUNDU	[signature]	15.2 85	
		NAME	SIGN	DATE	

SCREW M2-7g6gx10 48A 016 GOST 1491-72	SHEET	WEIGHT	SCALE.
		0,00025	5:1
	TOTAL SHEETS		
Steel A12 GOST 1414-75.	ORDNANCE FACTORY PROJECT HYDERABAD		

X1-10871

Rz 40 (√)

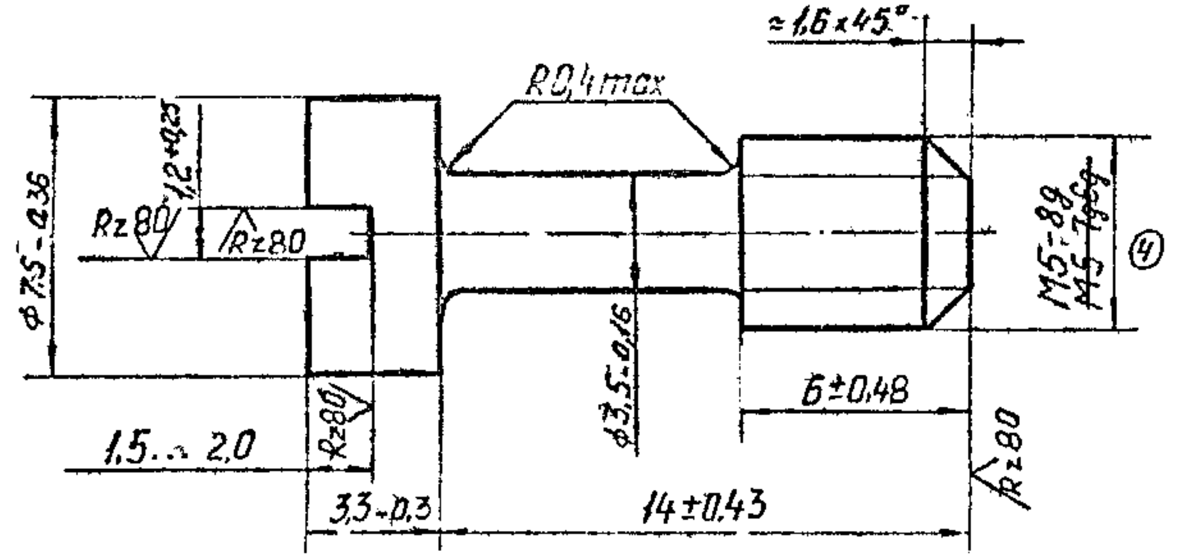

1 Asymmetry of head is 0.25mm, that of flat is 0.4mm with respect to the axis of screw body

2 Coating Zinc-plated, 6microns thick, chromatizing Composition of solution for chromatizing is as per Ц-252-78

3 Other technical requirements are as per GOST1759-70

139 / I-615

X1-10871

SNO SHT	DOC NO	SIGN	DATE
DRAWN	PRASAD	prasad	24.12.84
EDT/CHKD	[illegible]	[illegible]	2.9.1[illegible]
F/M,DC	S R NAIR	[illegible]	18.1.83
DIV.OFFR	A.K.KUNDU	[illegible]	15.2.83
	NAME	SIGN	DATE

SCREW

Steel A12 GOST1414-75

SHEET	WEIGHT	SCALE
6	2,95г	5:1

TOTAL SHEETS

ORDNANCE FACTORY PROJECT HYDERABAD

Восстановленный подлинник №1

X1-11299

∇4 (∇)

98378

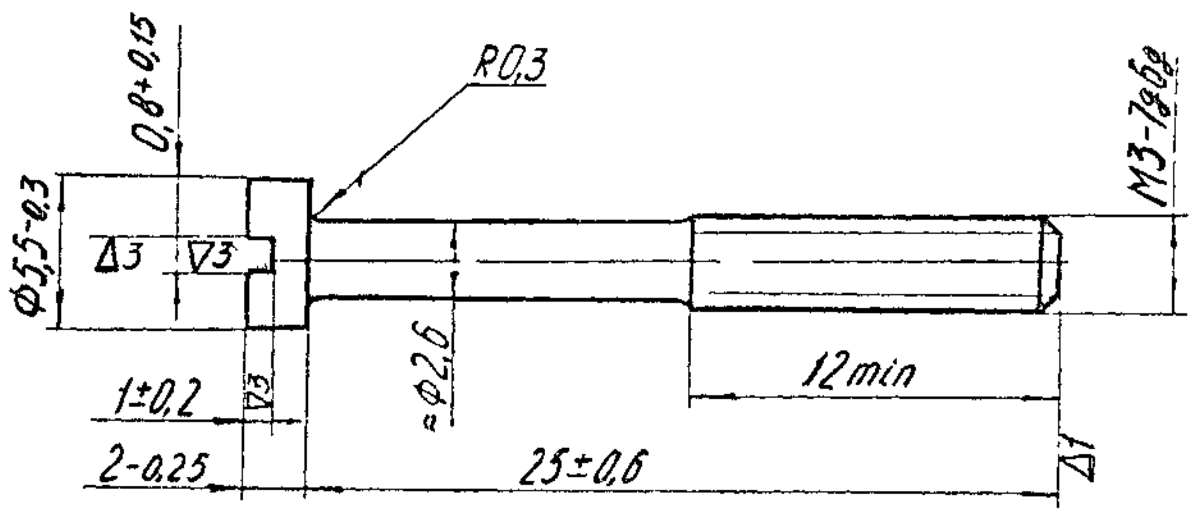

1. Alternate material is steel A12 GOST 1414-75.

2. Maxium misalignment of axes of head and slot with respect to body axis 0,15mm.

3. Coating: Zinc-plated, 6microns thick, chromatizing. Composition of solution for chromatizing is as per И -252-78.

4. Technical requirements are as per GOST 1759-70.

Copy is taken from GOST 1491-72.

Восстановлен. с подлинника

144 / I-615

X1-11299

SNO	SHT	DOC NO	SIGN	DATE
DRAWN		PRASAD	Prasad	24.12.84
EDT, CHKD		AKDUBEY	[illegible]	24.12.84
F/M, DC.		S R NAIR	[illegible]	18.1.85
DIV.OFFR		A.K.KUNDU	[illegible]	15.2.85
		NAME	SIGN	DATE

SCREW
M3-7g6gx25 36 016
GOST 1491-72

Steel 10
GOST1050-74

SHEET	WEIGHT	SCALE
	1,37 g	4:1

TOTAL SHEETS

ORDNANCE FACTORY PROJECT HYDERABAD

X1-11641

PH-10

восстановлен с подлинника №1

∇4(∇)

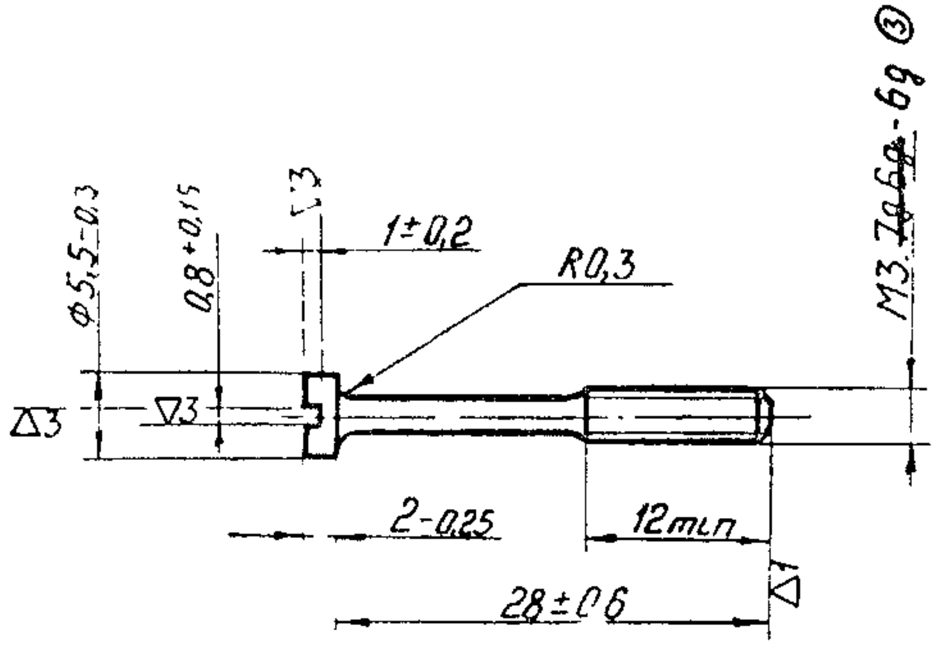

Designation	*	Coating
X1-11641	016	Zinc-plated, 6microns thick, chromatizing Composition of solution for chromatizing is as per И-252-78

1 Maximum misalignment of axes of head and slot with respect to axis of body is 0 15mm

2 Technical requirements are as per GOST 1759-70

Copy is taken from GOST 1491-72.

146
I-615

X1-11641

SNO	SHT	DOC NO	SIGN	DATE
DRAWN		PRASAD	prasad	24 12 8[illegible]
EDT,CHKD		AKDUBEY	[illegible]	[illegible]
F/M, DC.		S R NAIR	[illegible]	18 1 85
DIV.OFFR		A.K. KUNDU	AK	15 2.8[illegible]
		NAME	SIGN	DATE

SCREW

M3 6g×28 36
GOST1491-72.

Steel 10 GOST1050-74.

SHEET	WEIGHT	SCALE
	0,00151	2 1

TOTAL SHEETS

ORDNANCE FACTORY PROJECT HYDERABAD

X1-11653

∇4 (∇)

PH-10

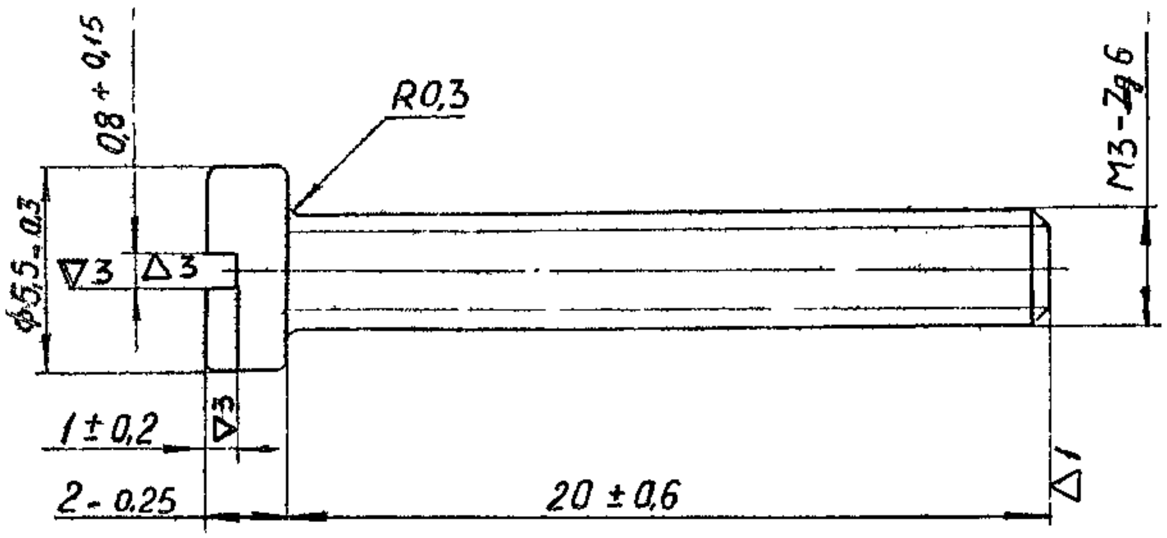

1 Maximum misalignment ofaxes of head and slot with respect to axis of body is 0 15mm

2 Technical requirements are as per GOST 1759-70

DESIGNATION	COATING
X1-11653	Zinc-plated ,6microns thick chromatizing Composition of solution for chromatizing is as per И-252-78,

147 / I-615

X1-11653

SCREW

SNO	SHT	DOC NO	SIGN	DATE
DRAWN		PRASAD	Prasad	24 12 8[illegible]
EDT,CHKD		A K BOSE	[illegible]	2[illegible]
F/M,DC.		S R NAIR	[illegible]	18 1 85
DIV.OFFR		A.K.KUNDU	[illegible]	15.2.8[illegible]
		NAME	SIGN	DATE

Steel 10, GOST1050-74

SHEET	WEIGHT	SCALE.
	1,156 g	5:1
		TOTAL SHEETS

ORDNANCE FACTORY PROJECT HYDERABAD

X2 - 10598

Rz80 (✓)

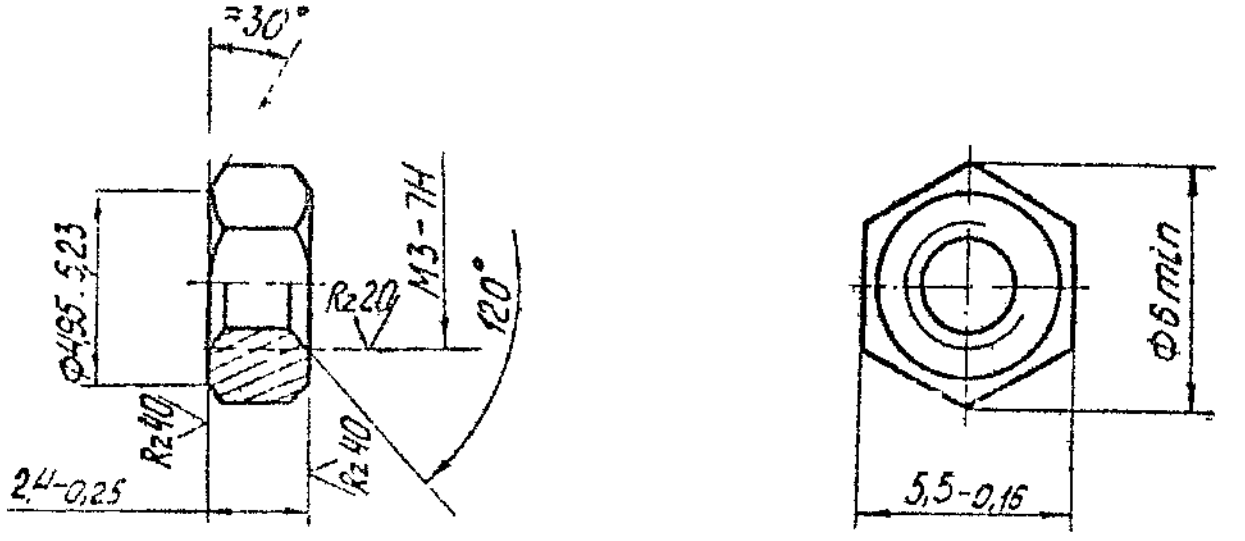

1 Maximum displacement of axis of holes with respect to faces is 0 2mm

2 Roughnesss R2 40 is allowed

3 Other technical requirements are as per GOST 1759-70

Designation	*	Coating
X2-10598	016	Zinc-plated, 6microns thick, chromatizing Composition of solution for chromatizing is as per ч-252-78,

Copy is taken from GOST 5927-70

136
I-615

X2 - 10598

NUT M3.5A

GOST 5927-70.

Steel A12 GOST 1414-75.

SNO SHT	DOC NO	SIGN	DATE
DRAWN	PRASAD	prasad	24 12 84
EDT CHKD	[illegible]	[illegible]	[illegible]
F/M, DC.	S R NAIR	[illegible]	18 1 85
DIV OFFR	A.K. KUNDU	[illegible]	15.2 85
	NAME	SIGN	DATE

SHEET	WEIGHT	SCALE
1	6.0377	5:1

TOTAL SHEETS

ORDNANCE FACTORY PROJECT HYDERABAD

X3-9675

Rz80

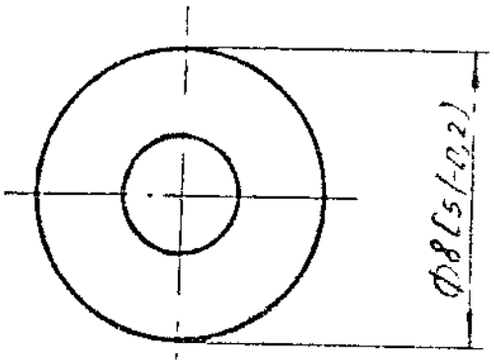

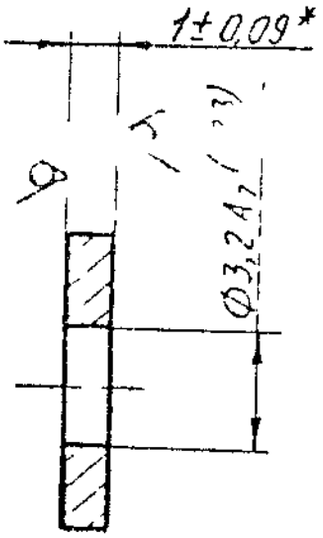

Designation	Coating
X3-9675	Zinc-plated, 6microns thick, chromatizing Composition of solution for chromatizing is as per И-252-78

* Dimension is given for reference

128
I-615

X3-9675

SNO	SHT	DOC NO	SIGN	DATE
DRAWN		PRASAD	prasad	22 12 84
EDT&CHKD		A K DUBEY		29.11.84
F/M, DC		S R NAIR		18 1 85
DIV.OFFR		A.K.KUNDU	A.K.	15.2.85
		NAME	SIGN	DATE

WASHER

61 GOST 19904-74

Sheet 4 -II 10 GOST 16523-70.

SHEET	WEIGHT	SCALE
6	0,6	5:1

TOTAL SHEETS

ORDNANCE FACTORY PROJECT HYDERABAD

X3-11005

Rz80 V(V)

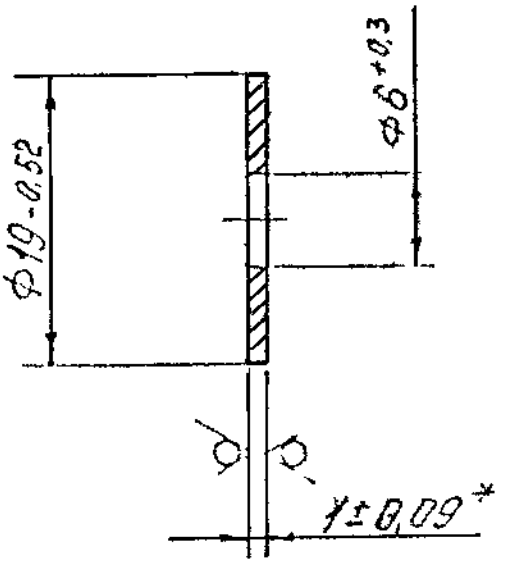

1. Dimenson is given fo rererence

2 Coating Zinc-plated, 6microns thick, chromatizing Composition of solution for chromatizing is as per И-252-78

141
I-615

ECKD

X3-11005

SNO/SHT	DOC NO	SIGN	DATE
DRAWN	PRASAD	Prasad	24 12 84
EDT/CHKD	[illegible]	[illegible]	25.12.[illegible]
F/M, D.C.	S R NAIR	[illegible]	18185
DIV.OFFR	A.K. KUNDU	[illegible]	15.2.85
	NAME	SIGN	DATE

WASHER

Sheet Б1 GOST19904-74
4-II-10 GOST16523-70.

SHEET	WEIGHT	SCALE
22		2:1

TOTAL SHEETS

ORDNANCE FACTORY
PROJECT
HYDERABAD

7624

X5-114-53

Rz80 √(√)

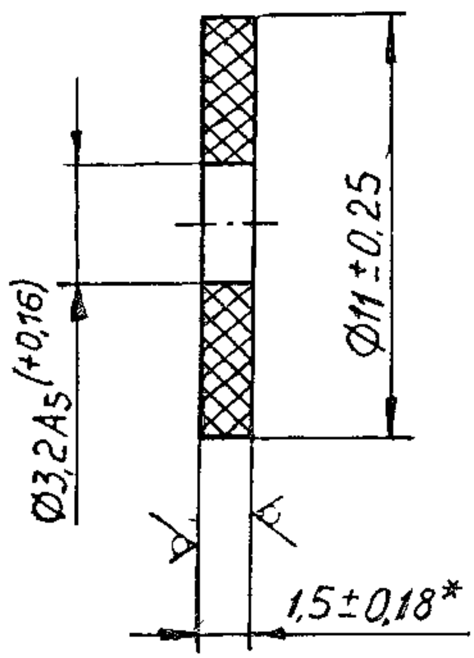

D Designation	Material	Alternate material	Coating
X5-114-53	Glass textolite A-1.5 GOST 2910-74.	Glass textolite Б-1.5 GOST2910-74.	Varnish ГФ-95 GOST8018-70.

1. * Dimension is given for reference.

2. it is allowed to use varnish МЛ-92(II) GOST 15865-70.

145 / I-615

145 / I-615 ЕСКД

Восстановлен с подлинника 2882 (подл) 94,76

X5-114-53

WASHER

SNO	SHT	DOC NO	SIGN	DATE
DRAWN		PRASAD	Prasad	24 12 84
EDT, CHKD		A K MUDGY		23 1 85
F/M, DC.		S R NAIR		18 1 85
DIV.OFFR		A.K. KUNDU	AK.	15.2 85
		NAME	SIGN	DATE

SHEET	WEIGHT	SCALE.
Б	0,172	5:1

TOTAL SHEETS

ORDNANCE FACTORY PROJECT HYDERABAD

копировал формат

X6-10783

Rz80

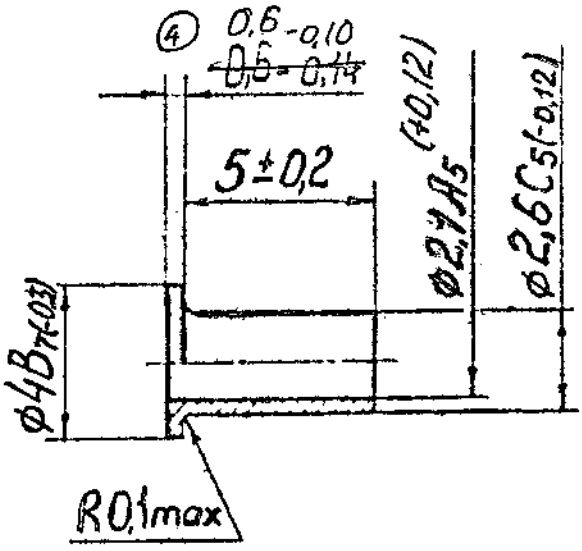

Coating: tin-plating,6.

138
I-615

ECKU

X6-10783

SNO	SHT	DOC NO	SIGN	DATE
DRAWN		PRASAD		24 12 84
EDT,CHKD		A.K. DUBEY		29.12.8
F/M,DC.		S R NAIR		18 1 85
DIV.OFFR		A.K. KUNDU		15 2 85
		NAME	SIGN	DATE

RIVET

Bar Л63 T.Kp ПП T-5
GOST2060-73.

SHEET	WEIGHT	SCALE.
5	0,082	5:1

TOTAL SHEETS

ORDNANCE FACTORY
PROJECT
HYDERABAD

X6-11236

Rz 80

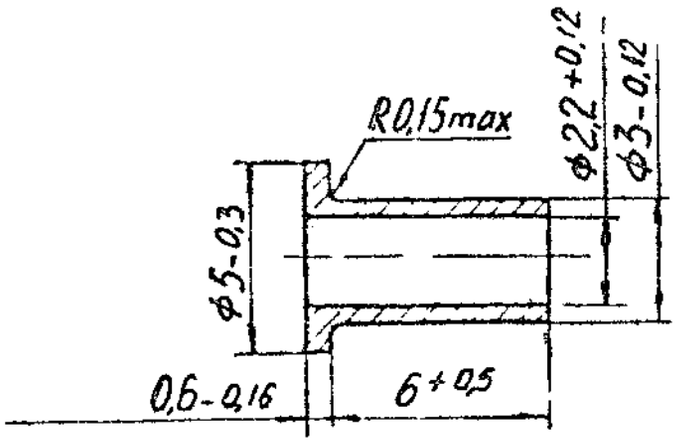

1, Limit displacement of axis of head with respect to axis of body is 0 2mm,

2 Coating Cadmium,9microns,thick, chromatizing

3 Other technical requirements are as per GOST 12644-67

143
I-615

X6-11236

SNO	SHT	DOC NO	SIGN	DATE
DRAWN		PRASAD	Prasad	24 12 84
EDT&CHKD				
F/M,D.C.		S R NAIR		18 1 85
DIV.OFFR		A.K. KUNDU		15 2 85
		NAME	SIGN	DATE

RIVET

Brass /1 63
GOST 15527-70

SHEET	WEIGHT	SCALE
6	0,105	5:1

TOTAL SHEETS

ORDNANCE FACTORY
PROJECT
HYDERABAD

X9-111-37

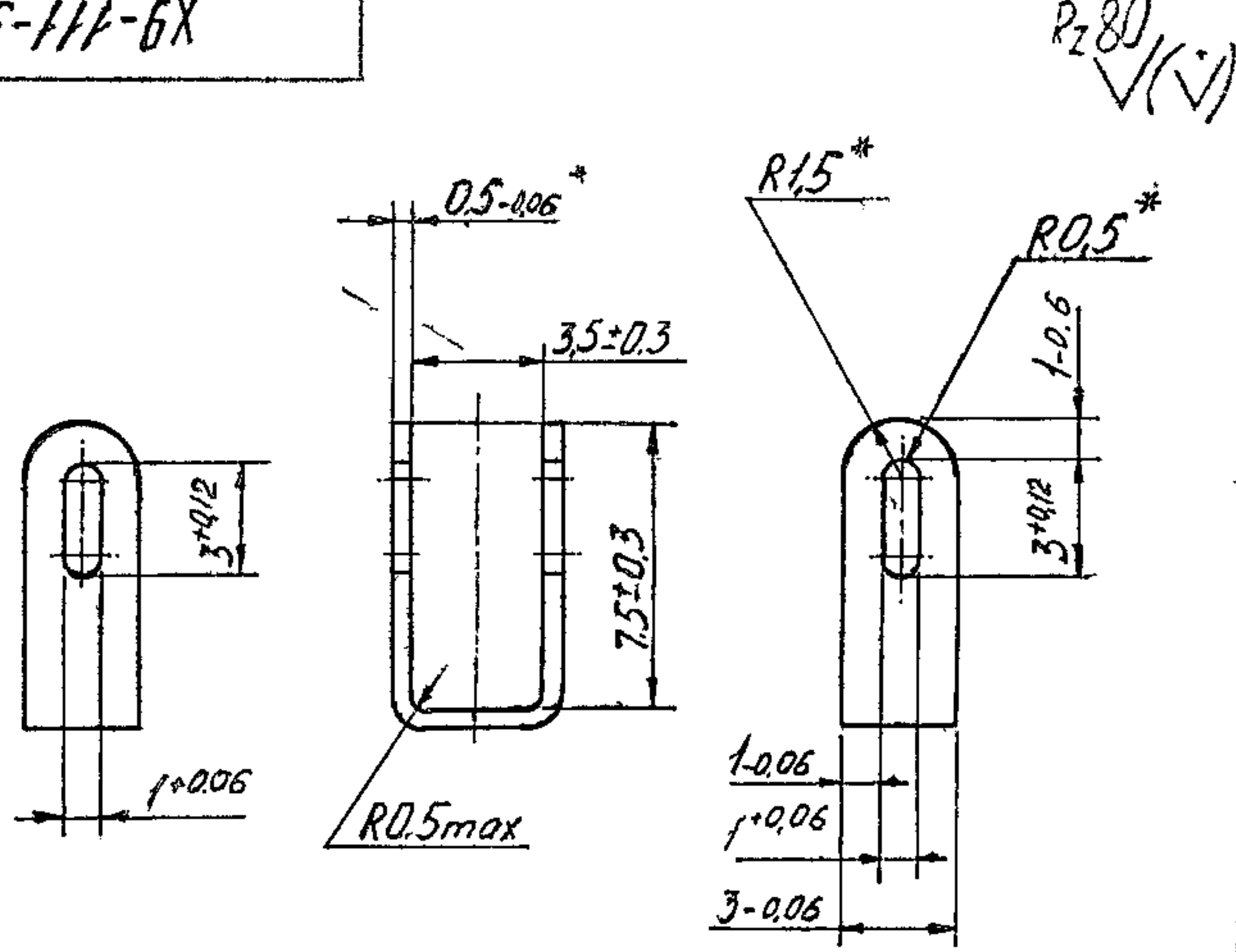

1 Alternate material is sheet АЛ PM 0.5 Л63 GOST 931-78

2 *Dimensions are given for reference

3 Coating Cadmium, 12microns

4 Permissible coating Tin, 15microns and Silver, 9microns

142
I-615

ЕСКД

X9-111-37

SNO	SHT	DOC NO	SIGN	DATE
DRAWN		PRASAD	prasad	24 12 84
EDT, CHKD		A.K.DUBEY		28.12.
F/M, D.C.		S R NAIR		18.1.85
DIV.OFFR		A.K.KUNDU	AK	15 2 85
		NAME	SIGN	DATE

LUG
НБКО 775 017
(НБК7 750.067)

Band АЛРНТ 0.5 Л63
GOST2208-75

SHEET	WEIGHT	SCALE
6	0,199	5 1

TOTAL SHEETS

ORDNANCE FACTORY PROJECT HYDERABAD

8И601-6Х

2.51

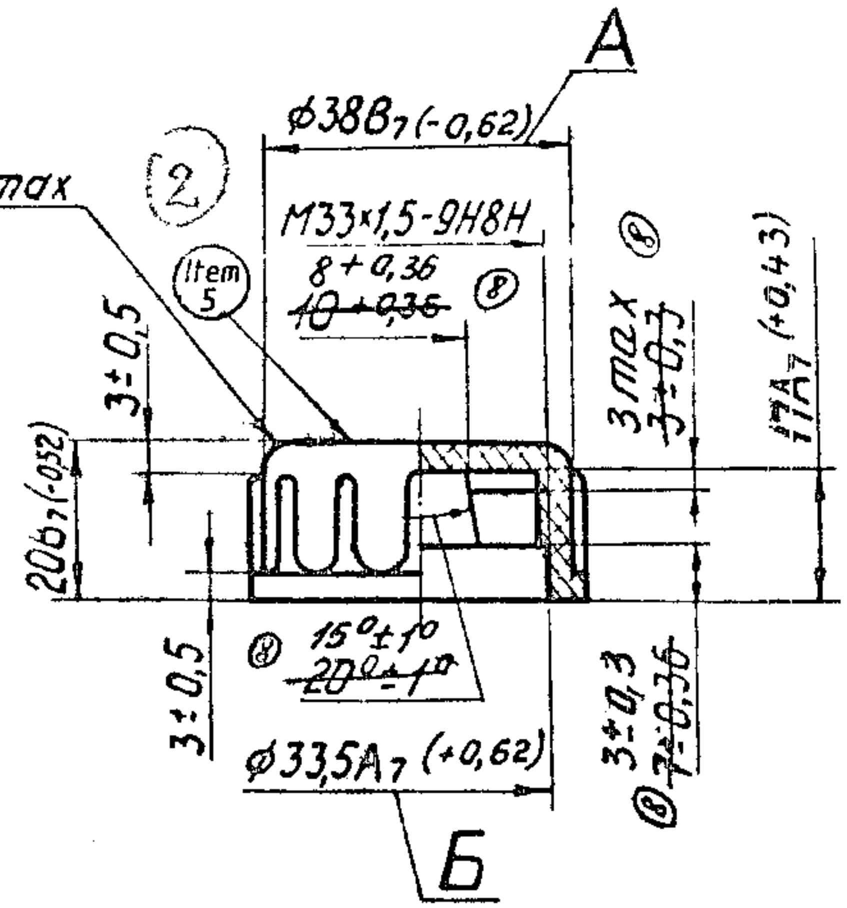

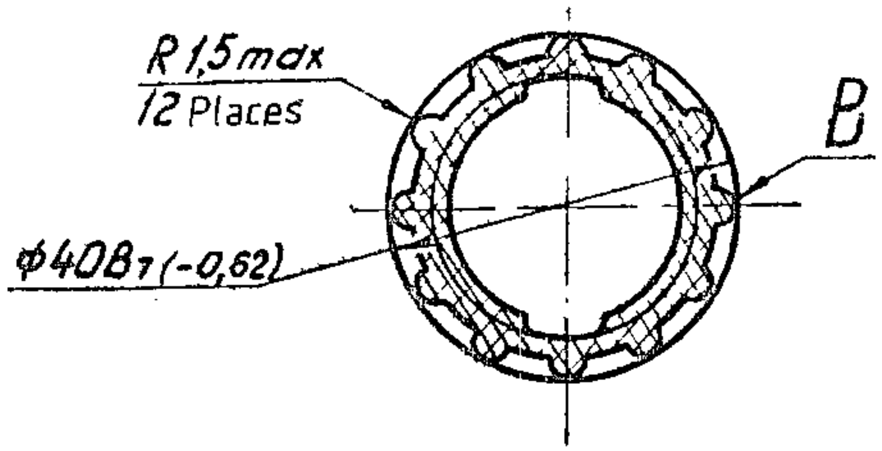

1 Alternate material is poly-ethylene 18103-035, grade2, GOST 16337-77

2 Taper of 1° to the side of decreased dimension A and 4° to the side of increased dimension Б is allowed upon removal from mould,

3 Unspecified radii should not exceed 1mm,

4 Displacement of ribs B along the angle is ±1° from true position

5 Mark the seat number of mould and designation of part with embossed type 4 as per HO 010 007.

6 Other requirements are as per OSTB 84-1602-78

7 Dimensions are provided with tool

140 / I-615

140 / I-615

X9-10948

SNO	SHT	DOC NO	SIGN	DATE
DRAWN		PRASAD	Prasad	24.12.84
EDT, CHKD		Ahdubey	[illegible]	29.12.84
F/M, DC.		S R NAIR	[illegible]	18.1.85
DIV.OFFR		A.K.KUNDU	[illegible]	15.2.85
		NAME	SIGN	DATE

CAP TRANSPORTATION

Polyethylene 209-01 Grade 1, GOST 16338-77

SHEET	WEIGHT	SCALE
	6.92	1:1
TOTAL SHEETS		

ORDNANCE FACTORY PROJECT HYDERABAD

АС-2

17888 (подл.) 5.7.76 40198

Восстановлен с подлинника