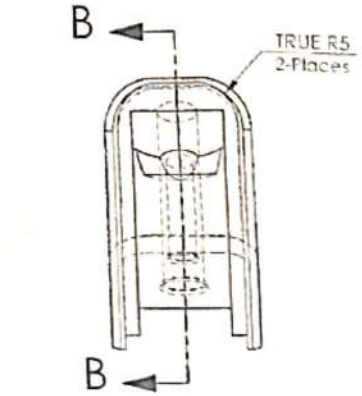

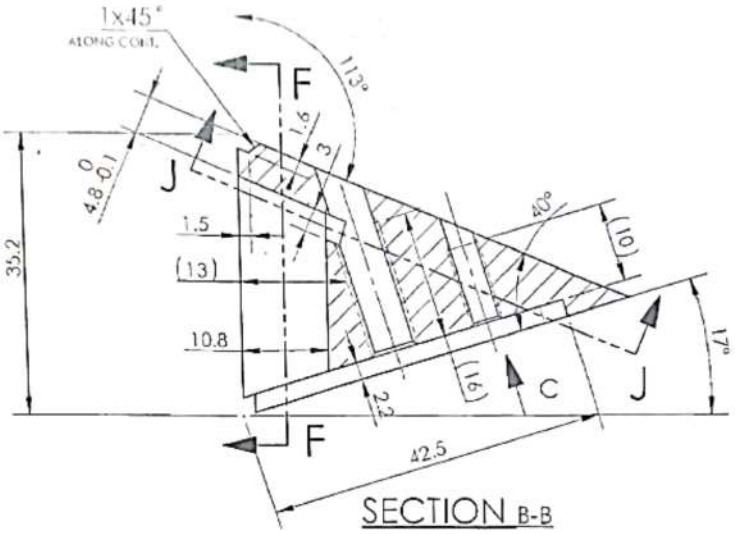

SECTION B-B

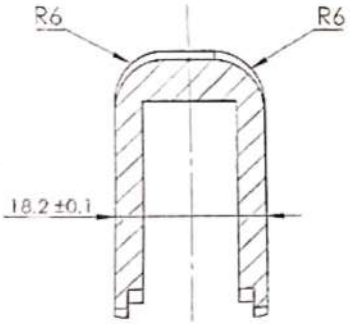

SECTION F-F

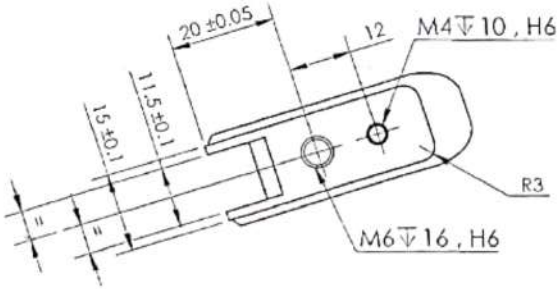

VIEW C

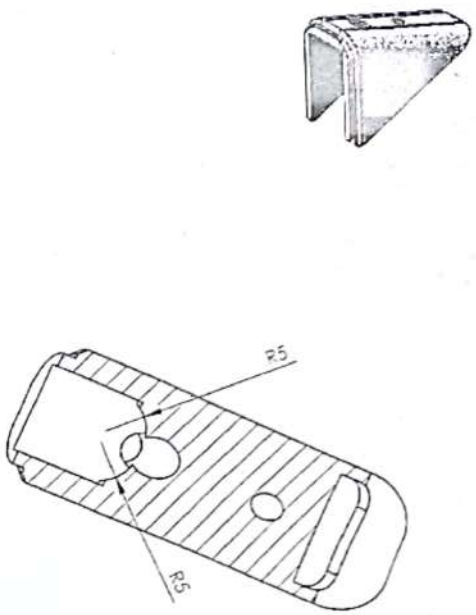

SECTION J-J

UN CONTROLLED COPY
CERTIFIED CORRECT COPY OF APPROVED
DRAWINGS AT THIS DATE 19/9/23
DESIGN & DRAWING OFFICE,
ORDNANCE FACTORY, TIRUCHIRAPPALI -620 016.

MATERIAL IN CASTING ROUTE:
BS 3146, PT-1, 1974,
TYPE-CLASS 5, GR-'A'

SL.NO	AMENDMENTS	SIG.& DATE
1	DR-NO. 026/22 DT. 30/09/2022	

Material: IS : 5517-1993 , GR-42Cr4Mo2	3rd Angle	DWG Details SIGN	DATE
Alt. Material: BS 970 Pt-3, 1991 709M40 (EN-19) OR (EN-19A	DRAWN		29/9/22
	CHECKED		
Hardness: 32 - 38 HRC	HDS/D&DO		
	DO/Prodn		
Finish:	DC/QC		
	DC/DDO		
Un tolerated dimensions IS:2102 Medium	APPROVED ON : 29/09/2022		

SUB:	BLOCK SCREW PISTOL GRIP		
FOR:	REAR FRAME ASSY		Do not scale Drawing
PROJ.:	40mm MGL		All Dimensions are in mm
Design Ref			
DWG. No.:	30P 3015 * 3	A3	QPG - 1
FT	ORDNANCE FACTORY TIRUCHIRAPPALLI-16.		Wt. (Appx) gm
			SHEET: 1 OF 1

Scanned with OKEN Scanner