DS CAT No.	DRG. CONVENTIONS CONFORM TO IS : 696 DIMENSIONS ARE IN mm UNLESS OTHERWISE STATED
3120-002319	

TOLERANCES FOR UNTOLERANCED LINEAR DIMENSIONS

ABOVE UP TO	– 6	6 30	30 120	120 315	315 1000	1000 2000	2000 4000	4000 –
TOLS	± 0.1	± 0.2	±0.3	± 0.5	± 0.8	± 1.2	± 2	± 3

NOTE :-
UNTOLERANCED SHAFT - 0.2 mm
UNTOLERANCED HOLE + 0.2 mm
UNTOLERANCED ANGLE GIVEN IN DEGREE
ONLY ± 30 MINUTES

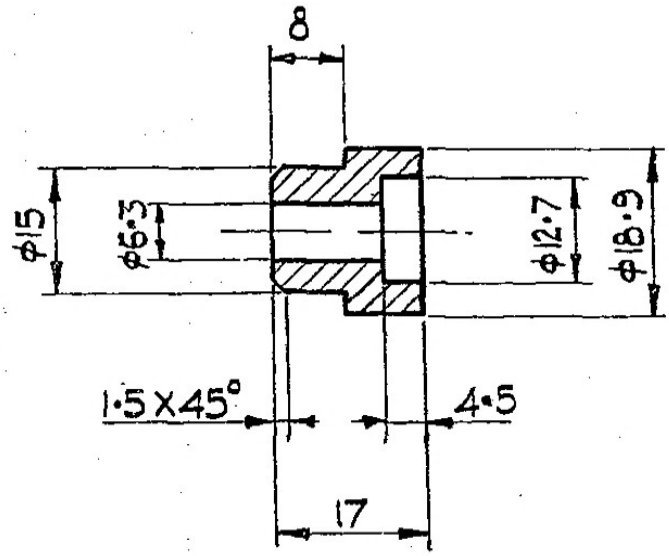

MATL :-
PHENOLIC LAMINATED SHEET GRADE
F_2 TO SPEC IS : 2036 - 1974

DATE	AUTH	ZONE	AMENDMENTS	SIG AHSP	SIG DO
19-2-07			SCANNED & PRINTED WITHOUT CHANGE		

PREV DC Nos:-
17827-W,18121-W,18825-W & 18844-W DT 03-01-04

DRG SEALED :-18844-W DT 03-01-04
DO CQA(W)

SCALE :- 1 : 1 | ESTD mass | DATE :-

MATERIAL :- AS ABOVE

PROT FINISH :-

BUSHING SLEEVE
बुशिंग स्लीव

CQA(W) JABALPUR

DRN	CHD
SCANNED :- PKA	CHD :- OPS
APPROVED DO	AHSP FOR CQAW
ASSY DRG. 5999 - 004191	
DESIGN No. ILG - 165	
PART No IFL - 8090	
DS CAT No. 3120-002319	