† DRG.NO. RFI SK NO 9521

MANUFACTURING OF FORGING UNDER DISCRETION OF MANUFACTURER.

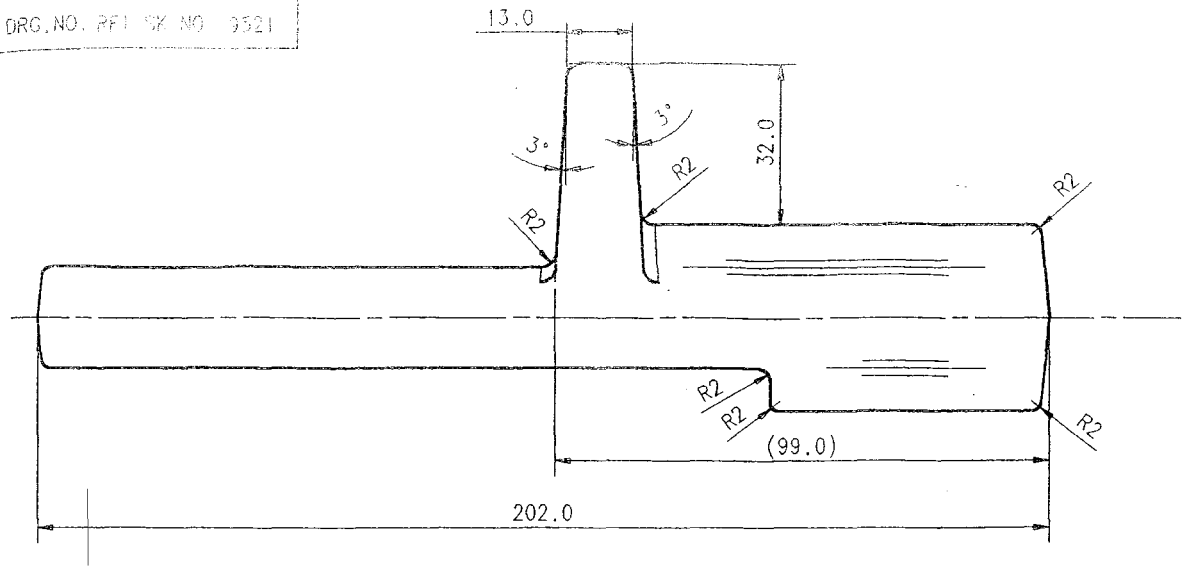

प्रमाणित प्रति/CERTIFIED COPY OF
ड्राइंग/लेआउट/गेज शिड्यूल Hos/Impm
DRG/LAYOUT/GAUGE SCHEDULE
दिनांक/DATE 9.3.17
RIFLE FACTORY ISHAPORE

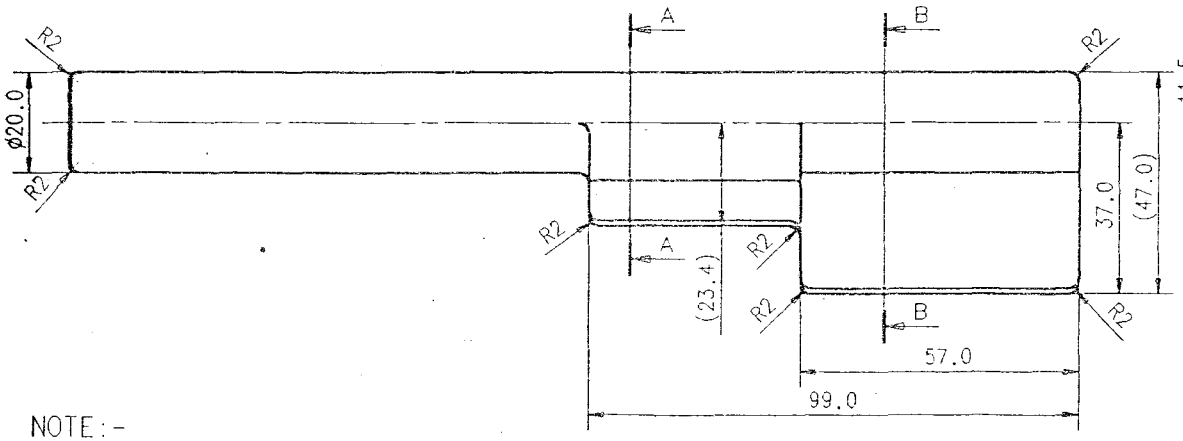

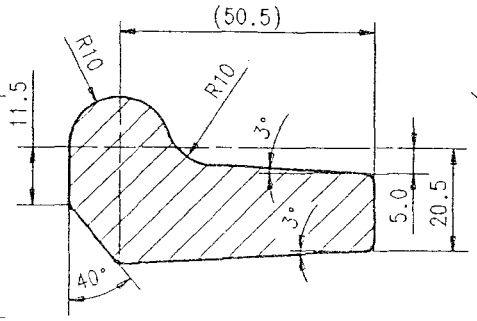

SECTION:- A-A

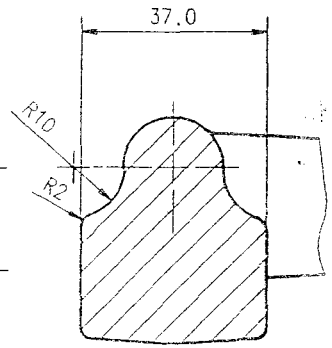

SECTION:- B-B

NOTE:-

1. TOLERENCE UNLESS OTHERWISE SPECIFIED ±0.5
2. MISMATCH SHOULD NOT EXCEED 0.5mm.
3. CORNER RADIUS UNLESS OTHERWISE SPECIFIED R3
4. FORGING SURFACES SHOULD BE FREE FROM PIT MARKS AAND SCALES.
5. DRAFT ANGLE UNLESS OTHERWISE SPECIFIED 5°
6. BEND IS NOT ALLOWED ALONG HORIZONTAL AXIS OF THE FORGING.
7. CAAST NO./SYMBOL LETTERS TO BE STAMPED ON INDIVIDUAL FORGING.
8. FORGIMG TO BE SUPPIED IN ANNEALED CONDITION ALONG WITH THE TEST SAMPLE TO BE TESTED FOR HARDNESS IN ANEALED CONDITION AND AFTER FINAL HEAT TREATMENT.
9. MAGNETIC TEST FOR CRACK DETECTION TO BE CARRIED OUT.

SEEN & APPROVED
27/05/14
HOS/CNC-II

MATERIAL:- STEEL BS:970 PT 1 1983 GD.655 M13		ALL DIMENSIONS ARE IN MILI METER IMPORTENT DIMENSIONS MARKED THUS ⊕ INFORMETION MARKED THUS † TO BE MARKED ON		
TITLE OF	OPERATION	2016	NAME	DATE
FORGING OF PISTON EXTN.		DGN.	Munter	29/4/16
		DRN.		
ORDNANCE FACTORY BOARD RIFLE FACTORY ISHAPORE	SCALE:- 1:1	CKD.		13/5
		APPD.		
ASSAULT RIFLE 7.62x39mm. (GHAATAK) PISTON EXTENSION		DRG.NO. RFI SK NO. 9521		
		SHEET-1	OF-1	