DRG.No. 0204 03 02 02 18 018 00DE

GEN. TOL. FINE/MEDIUM/COARSE CLASS 10 IS: 2102 / DRG. CONVENTIONS CONFIRM TO INDIAN STD. DIMN. IN mm UNLESS OTHERWISE STATED

NOTES:
1) REMOVE ALL SHARP CORNERS AND BURRS
2) HARDNESS 190-250 HV
3) ALL MATERIAL MIN 37 (IRC 37) EQUIVALENT HARDNESS 500-650 HV

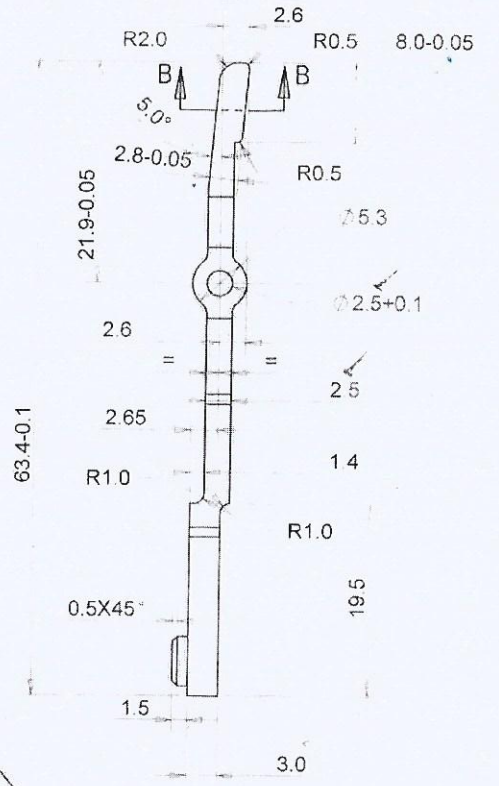

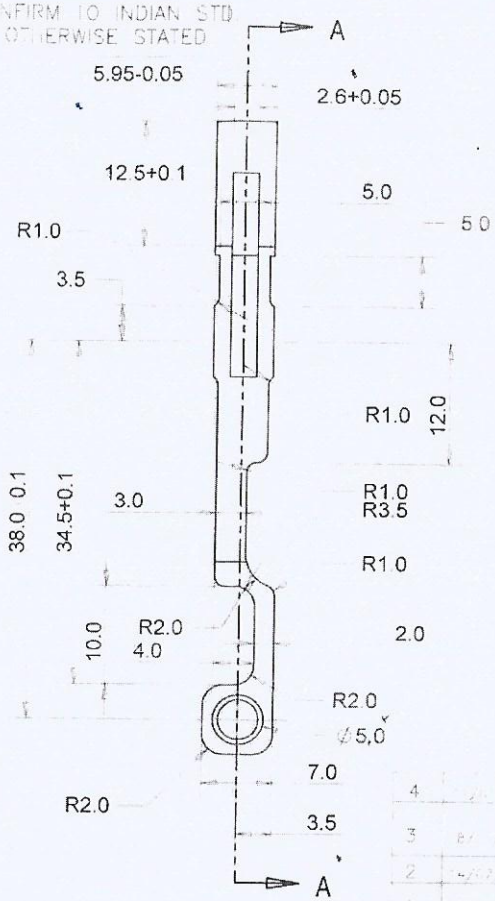

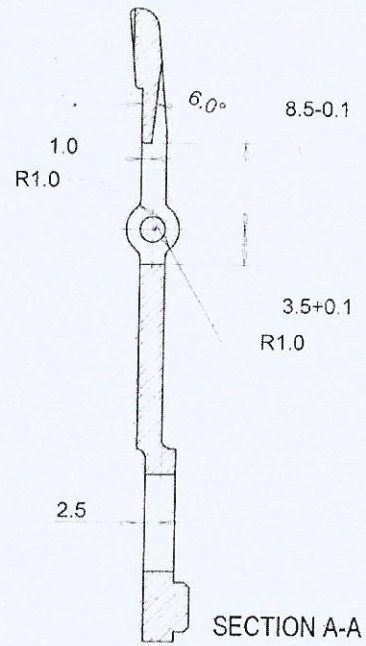

SECTION A-A

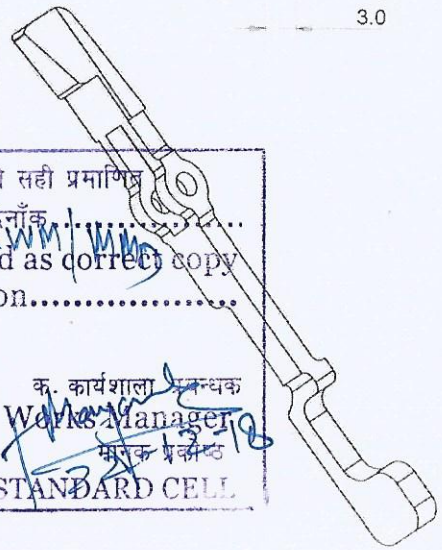

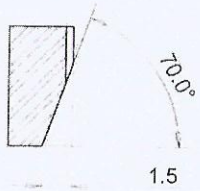

SECTION B-B

Sr. No.	DATE	AUTHORITY	BRIEF RECORD	ZONE	CD SIGN	GO
4	[illegible]	M-37	[illegible]	[illegible]		
3	[illegible]	M-29	[illegible]	[illegible]		
2	[illegible]	M-27	[illegible]	[illegible]		
1	08/08/2011	M-18	[illegible]	[illegible]		

DRN. SD C.D.
APPD. DATE 11/01/2011 Director
SEALED DATE

MATERIAL :- STEEL TO IS:5517-1993, Cd-4008 (En 8)

PROTECTIVE FINISH :-PHOSPHATED TO SPECN S:3618 1966, CLASS 'B'

SCALE:- NTS EST. MASS

TITLE :-

LEVER CATCH MAGAZINE

DESIGN AUTHORITY
ARDE
PUNE 411021

DRG.No. 0204 03 02 02 18 018 00DE

आरेखण की सही प्रमाणित प्रतिलिपि दिनाँक.....
Certified as correct copy of drg. on.....
क. कार्यशाला प्रबन्धक
Jr. Works Manager
मानक प्रकोष्ठ
STANDARD CELL