DRG.No.	0204	03	02	00	01	003	00DC
	IC	SS	S	AA	A	C	SST

GEN. TOL. FINE/MEDIUM/COARSE
CLASS TO IS: 2102

DRG. CONVENTIONS CONFIRM TO INDIAN STD.
DIMN. IN mm UNLESS OTHERWISE STATED

CONTROL COPY No. 05

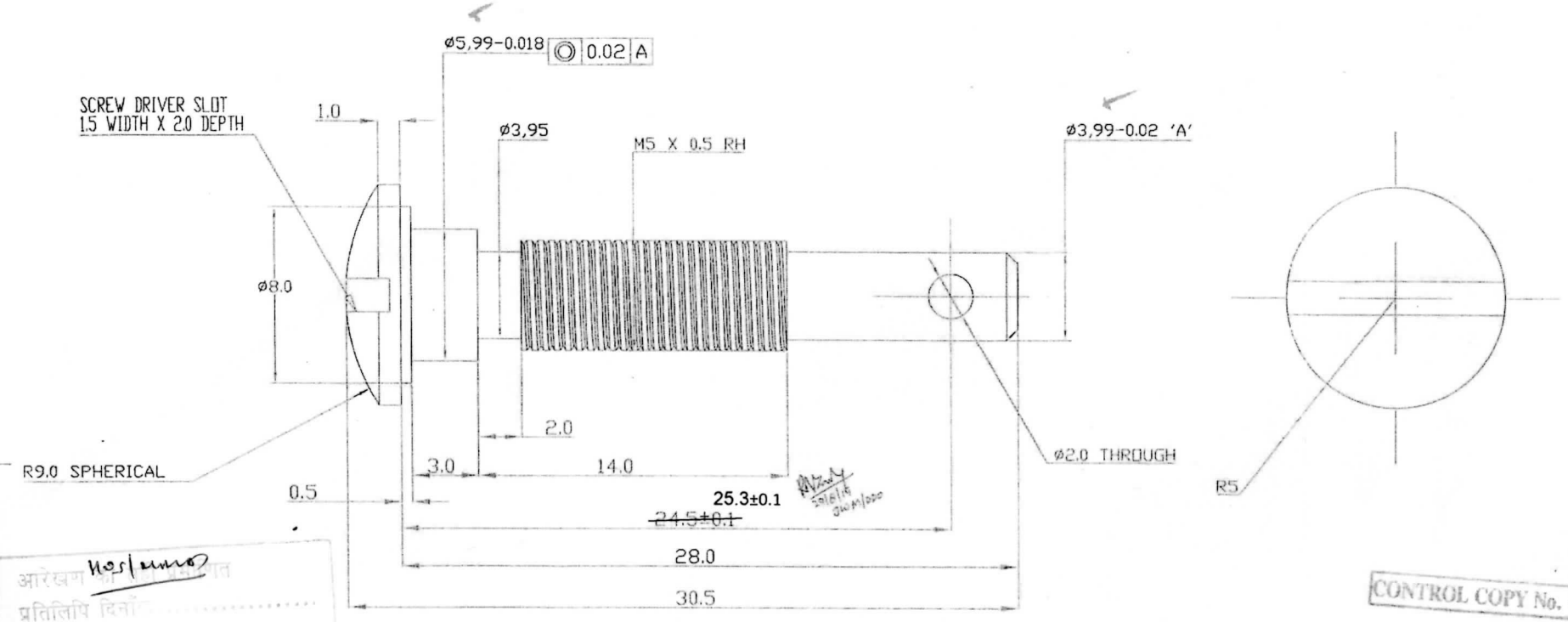

CONTROL COPY No. 1

Received 29/11/1

Sr. No.	DATE	AUTHORITY	BRIEF RECORD	ZONE	CD	GO
2	09/11/15	M-29	DRG. REVISED	----	SIGN	
1	14/07/15	M-27	ALT MATL. ADDED.	F-2,3		

DRN. PRANAV. CHD.

APPD.
DATE 09/11/15 For Director

SEALED
DATE

SCALE:- 5:1 EST. MASS

DESIGN AUTHORITY
ARDE
PUNE 411021

MATERIAL :- STEEL TO IS:5517-1993, Gd-550 (En-9)

PROTECTIVE FINISH :-PHOSPHATED TO SPECN. IS 3618-1966, CLASS 'B

TITLE :-

SCREW AXIS REAR SIGHT

PART No. DS CAT. No. AHSP

आरेखण की प्रतिलिपि प्रमाणित
प्रतिलिपि दिनांक .....
Certified correct copy of drg. 27/10/20...
प्रबन्धक
Jr. Manager
मानक प्रकोष्ठ
STANDARD CELL

NOTE:-
1) REMOVE ALL SHARP EDGES AND BURRS.
2) HARDNESS : 300-350 HV
3) DIMN ARE TO BE READ AS APPLIED AFTER PROTECTIVE FINISH.
4) ALT. MATL.: MIM S7 (AISI S7 Equivalent)
HARDNESS : 500-600 HV